S12.2C EVO

1/10 Off Road 2WD Racing Electric



SWORKz S12-2C EVO INSTRUCTION MANUAL

S12-2C EVO

1/10 Off Road 2WD Racing Electric Buggy

INSTRUCTION

The SWORKz S12-2C Evolution (S12-2C EVO) (Carpet Edition) 1/10 2WD is designed for pure racing. It is an evolution from the successful S12-2C platform. The new geometry of the car provides optimized corner speeds and easy handling on carpet and very high grip tracks.

The S12-2C EVO features a new carpet version gear box system on a T7075 hard anodized and lightened aluminum chassis. It has a layout that allows up to 6 different battery positions. The flex of the chassis can be changed by adjusting the sideguards.

The S12-2C EVO comes with SWORKz brand new designed 1/10 Pro-Shock System (Short version). The shocks come with new Emulsion Precision Plastic Shock Caps, Shock Pistons with Seal Parts. The kit comes standard with a 4mm carbon carpet version front shock tower and newly designed front C-Hubs. The Teflon coated shock shafts provides smooth shock reactions. Black Line springs which are newly designed with rotation fixed spring holders comes standard in the SWORKz S12-2C EVO kit.

A brand new 5.5mm linkage ball stud system are included in the S12-2C EVO kit. Adjustable Ackermann plate and Carbon steering plates are included too. The S12-2C EVO has new angled lower arms that provide a lower Shock position which leads to a lower center of gravity.

The kit is equipped with a quick release gear differential system, which can be mounted in 3 different positions. The rear lower arms are angled and the rear shock tower (carpet version) has got different height positions. The weight of the gearbox is optimized to a perfect balance between size and strength.

The rear shock tower (carpet version) of the S12-2C EVO is made of carbon. The wing mount holder's height and angle can be adjusted. The rear width of the S12-2C EVO can be changed with the new Synthesis Rear Hub System and rear CVD modularity.

The SWORKz S12-2C EVO has a front sway bar and a completely new rear sway bar holder system.

The 2-Pad Slipper of the SWORKz S12-2C EVO comes with hard anodized plates, high temperature resistant slipper pads and a spur gear protection with a engraved SWORKz logo.

The S12-2C EVO body shell has good aerodynamics.

The SWORKz development team focused on using materials, corresponding to the highest quality standards, when designing the car. You will find only 100% SWORKz quality in the S12-2C EVO kit.

Congratulations on your purchase of the new SWORKz S12-2C EVO 1/10 scale off-road racing buggy and thanks for trusting in SWORKz.

Please read this manual carefully before you start to build and drive your SWORKz S12-2C EVO. This manual contains step-by-step instructions to help you complete, prepare and fine tune your buggy for racing. Updates, setups, and product news will be posted on SWORKz digital media.

As always, if you should ever have any questions or need help with your SWORKz products, please feel free to contact our official SWORKz dealers and distributors.

S12-2 Chassis Features :

1. **T7075 hard anodized & lightened aluminum chassis**
2. **Adjustable flex system with various sideguards**
3. **6 different battery positions**
4. **4mm Carbon shock tower**
5. **New C-Hub geometry**
6. **Changeable Ackerman plate**
7. **Carbon steering knuckle plates**
8. **Front sway bar system**
9. **Super light anodized front wheel axles**
10. **Front wing mount with 65mm front wing**
11. **Front aluminum toe in plate**
12. **Front lower arms in angled design**
13. **Easy adjustable Ackerman plate**
14. **The brand 5.5mm linkage ball stud system**
15. **Adjustable differential position**
16. **Quick differential release system**
17. **Lower shock position design with adjustable shock tower position**
18. **Brand new design SWORKz 1/10 Pro Shock System (Shorty version)**
19. **Adjustable rear wing height**
20. **Adjustable rear wing angle**
21. **Rear width adjustable with hubs included length adjustable CVD**
22. **New Synthesis Rear Hub System**
23. **Fully adjustable square aluminum toe in plate "SWORKz" engraved**
24. **New designed rear sway bar holder**
25. **Rear wheel hex hard anodized**
26. **Rear Carbon Shock tower**
27. **Super light CAD optimized gearbox**
28. **2 Pad Slipper System with hard anodized plates**
29. **Slipper Anti-Clock rotation adjustment**
30. **High temperature resistant slipper pads**
31. **Spur gear protection with laser Logo**
32. **Precision plastic emulsion shock cap system**
33. **Unique designed shock stud screws**
34. **Hard anodized stock studs**
35. **Black line shock spring**
36. **Rotation protected spring holder**
37. **Teflon hard coated shock shaft**
38. **Hard coated shock body**
39. **6 Ball bearings servo system**
40. **Quick release electronic plate**
41. **Battery pad included**
42. **Balanced motor position**
43. **Body shell with optimized aerodynamic design**



Specification	
Length:	410mm
Width:	242-248mm
Height:	148mm
Ground Clearance:	40mm
Wheelbase:	282-284mm
Track:	F:220mm / R221mm
Gear Ratio:	S:81/21T
Weight:	1380g+/-10g (Race Condition)

WARRANTY

Your SWORKz S12-2C EVO kit warranty covers workmanship and manufacturing defects of the original and unmodified parts. Warranty claims resulting from crashes, abuse, improperoperation, improper mounting, improper adjustment or lack of maintenance will not be honored.

Contact your local hobby shop or SWORKz distributor for all claims and questions. Claims must be well documented. All Claims are subject to expert examination approval by SWORKz.

www.sworkz.com

INSTRUCTION	2
Warranty	3
INDEX	4
Required Equipment for Operation	5
Operation Guide	6
Assembly Steps	7-26
Set-up Sheet	27
Blank Set-up Sheet	28
S12-2C EVO Key No.List	29
S12-2C EVO Spare Part List	30
S12-2C EVO Option Part List	31
Explosion view with spare parts number	32-35
End cover	36



This radio control racing car is not a toy!
This high-performance R/C model is recommended for ages 14 and older.

Required Equipment for Operation

Radio Gear

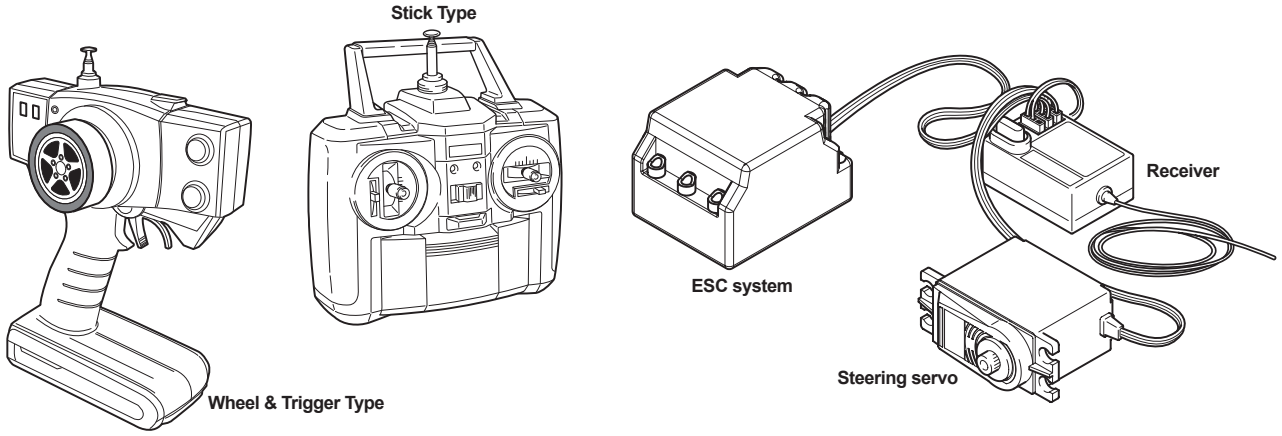

Breshless Motor

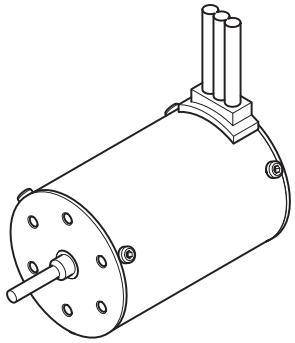

Charger and LiPo Battery

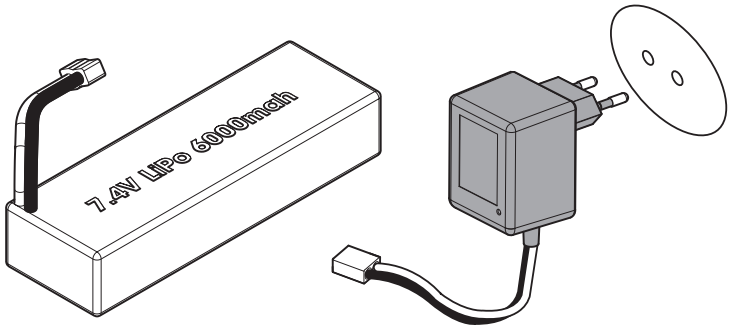

Tools Recommended

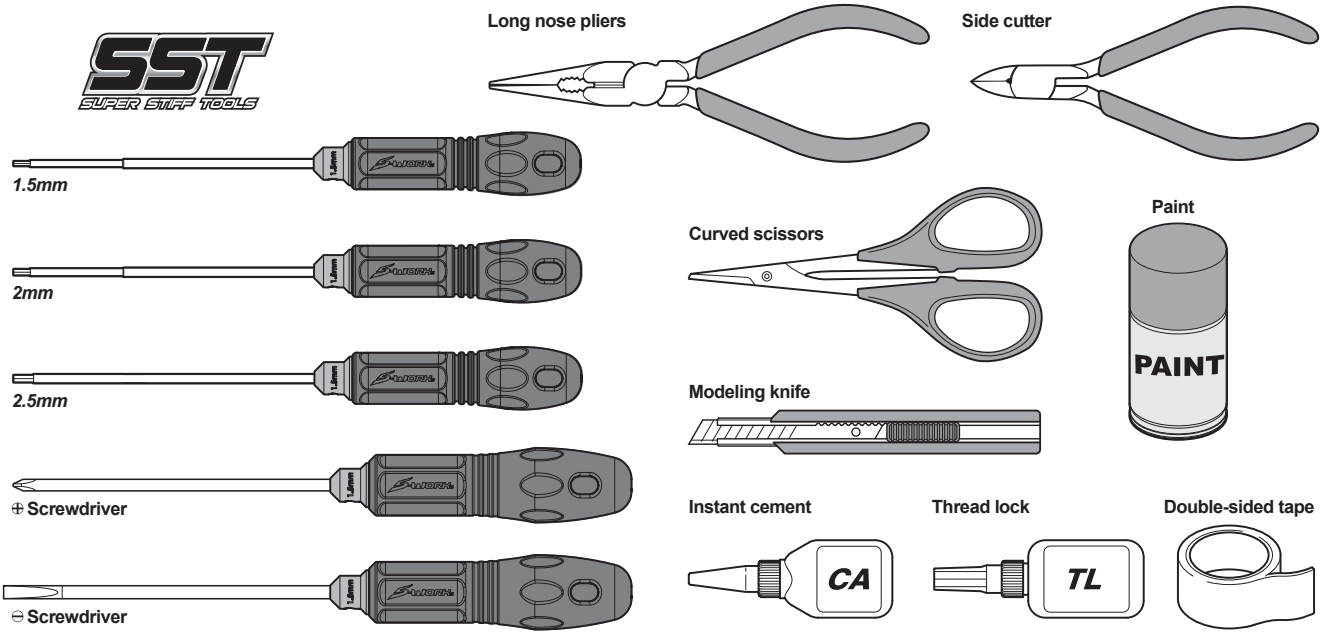

Included items

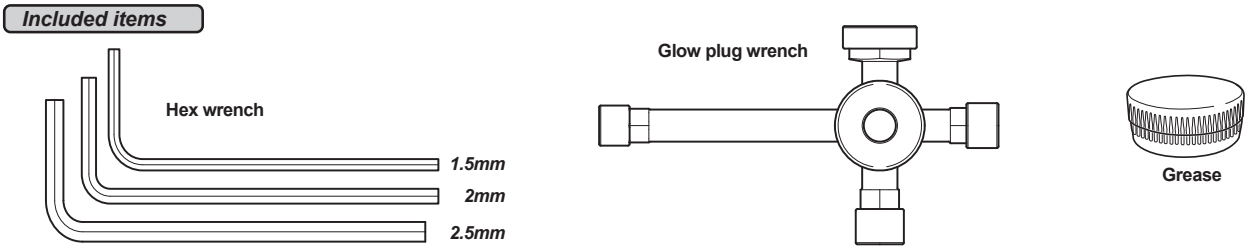

Operation Guide



Assemble front and rear

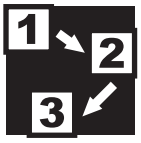

Assemble in the specified order



Assemble both left and right sides



Assemble for 2 sets



Assemble for 4 sets

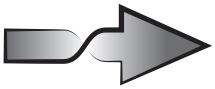

overturn



Thread Locking Compound



Grease

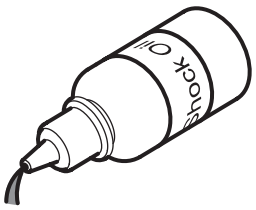

Pure Silicone Oil

Safety Precautions

The SWORKz S12-2C EVO is a high performance radio control model which needs to be operated with caution and common sense.

The S12-2C EVO Pro Kit is not intended for children under the age of 14 without adult supervision. SWORKz shall not be held liable for any loss or damages, whether direct, indirect, act of nature, arising from abuse or misuse of this product or any other product required.

- The LiPO Battery can be dangerous if improperly handled.

- Always keep your LiPO Battery in a cool area and never use it near flames, sparks, or while smoking.

- Keep your LiPO Battery, and all other flammables, out of the reach of children.

- After running your car, all parts of the Motor and ESC can become extremely hot. Be careful not to touch these parts.

- This model is controlled by your radio controller and can be vulnerable to interference from many outside sources. This interference can cause a loss of control so it is necessary to operate this model in an open area to avoid personal or property damage. Always ensure turning on your radio first.

- Keep all the products included in the package out of the reach of children.

- This model contains many fast rotating parts. Never touch them during operation.

- Follow the instructions included with your radio gear.

- Never operate your model near people or property. The speed of this model has the potential to injure people and or damage property if misused.

- Always use original SWORKz spare parts and option parts.

- Always ensure that the buggy is in proper working condition before use.

- Always exercise caution when using any tools.

BAG B

330283
Pin M2x10mm ***x2***

400002
O-ring S5 4.8x1.5 ***x2***

116013R
Ball Bearing 10x15x4mm (Red Rubber Case) ***x2***

101024
10x12x0.2mm S104 Shim ***x1***

101023
10x12x0.1mm S104 Shim ***x1***

1

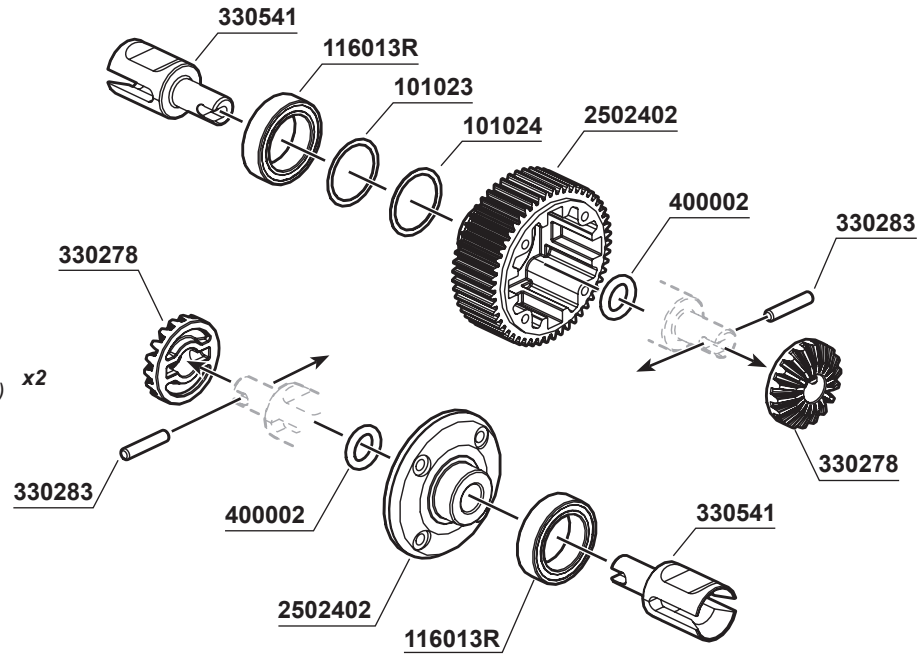

2

106014
M2x6mm Hex Socket OH/TP Screw ***x4***

330279
Bevel Gear Shaft ***x2***

101025
Shim 3.5x10x0.1mm ***x4***

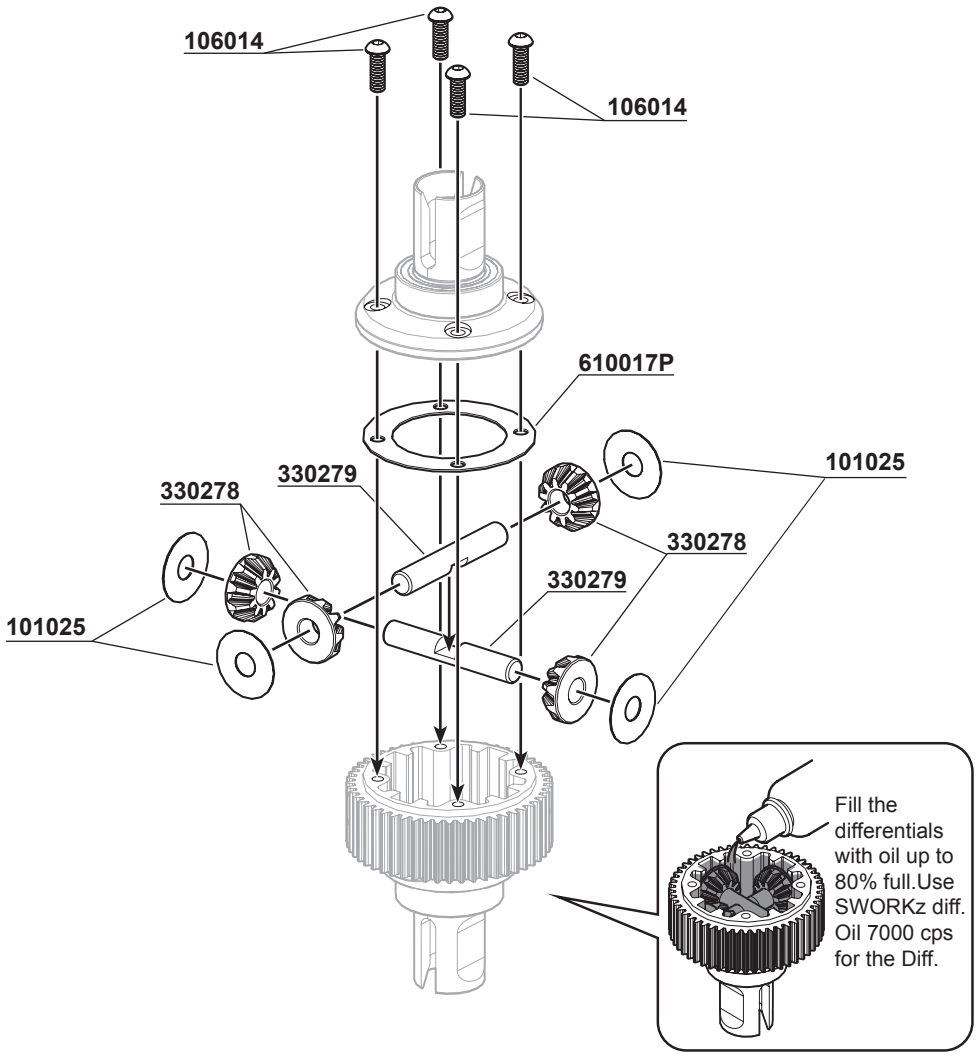

BAG C

3

330283
Pin M2x10mm *x1*

108006
M3x8mm FH/ST HEX Screw *x3*

332005A
S12-2 Slipper Clutch Adjust Screw 2.4x65mm *x1*

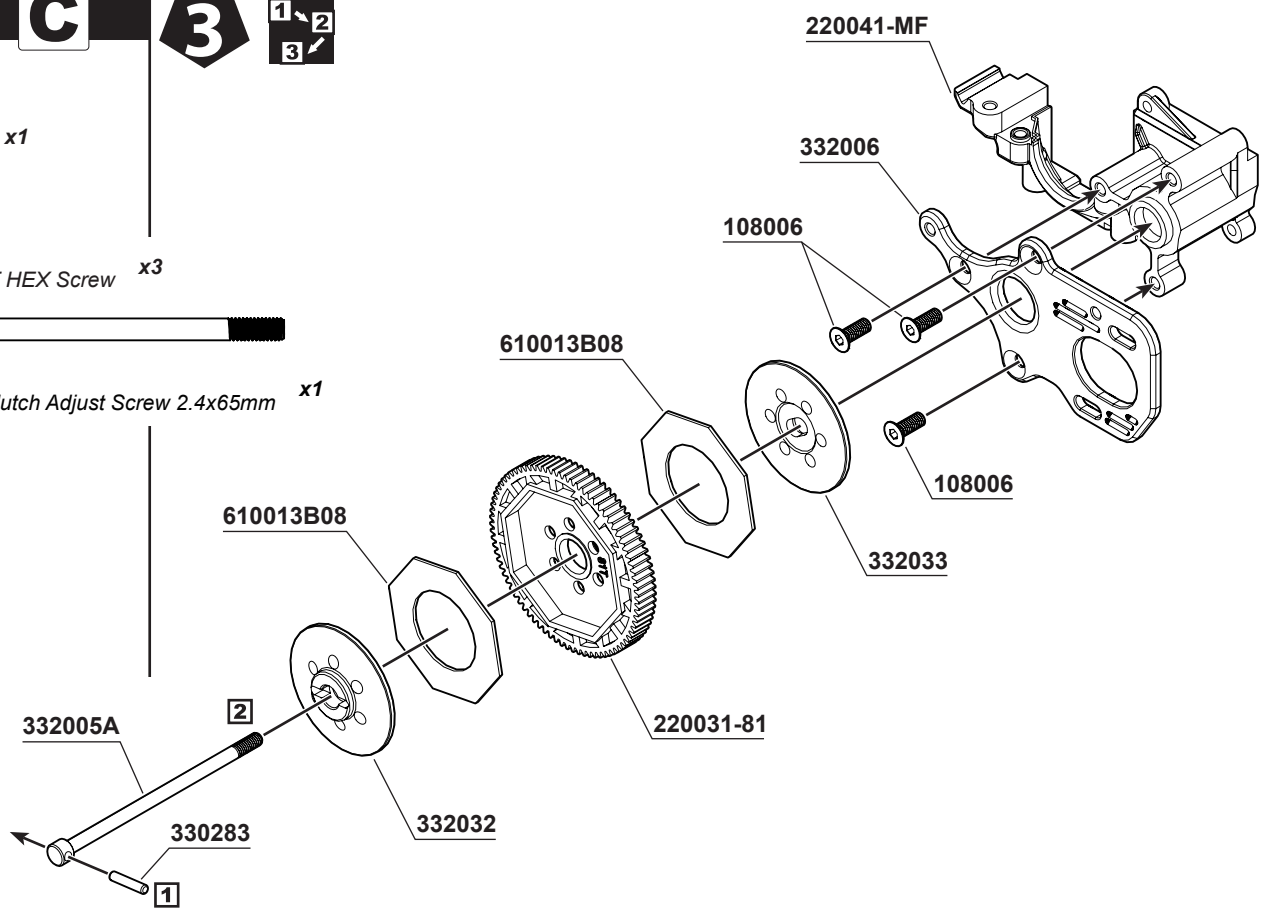

4

106015
M3x5mm Hex Socket OH/TP Screw *x2*

116010R
Ball Bearing 5x10x4mm (Red Rubber Case) *x4*

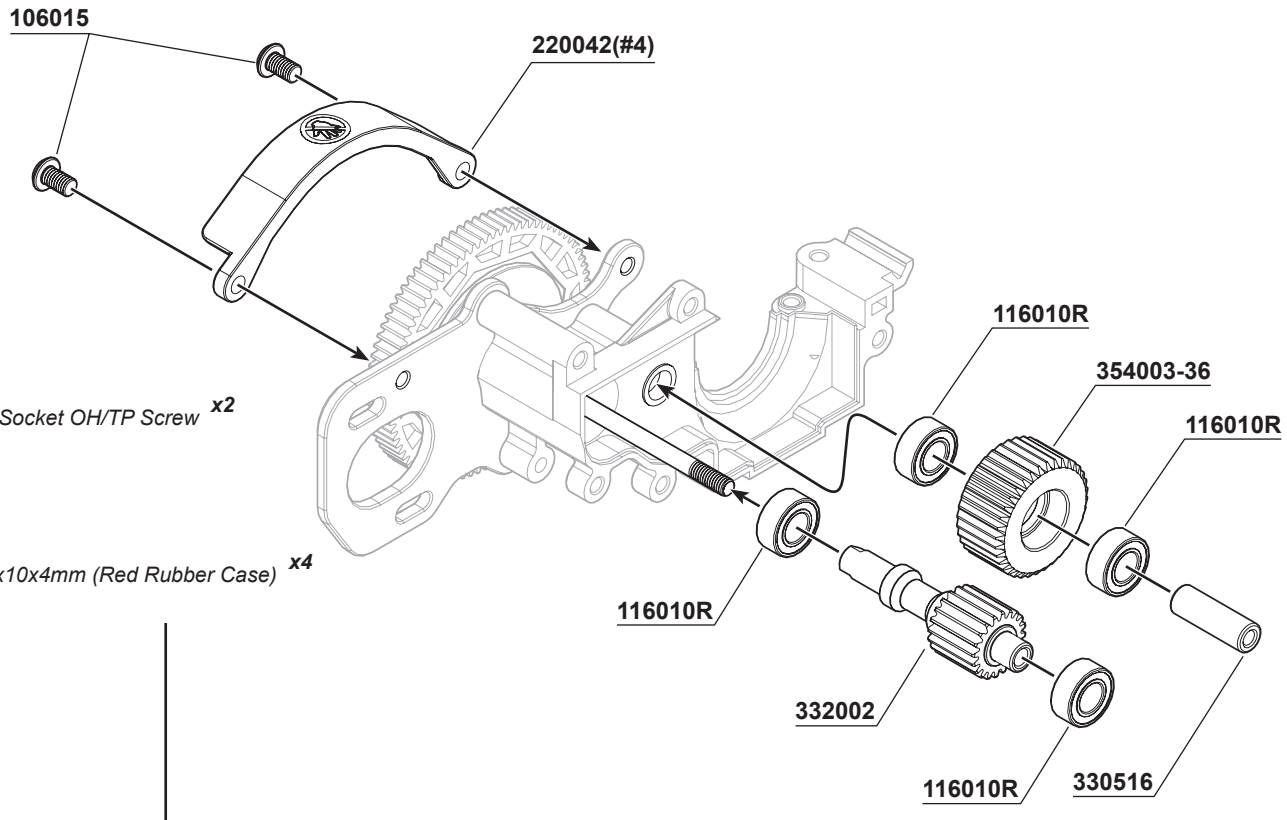

BAG C

5

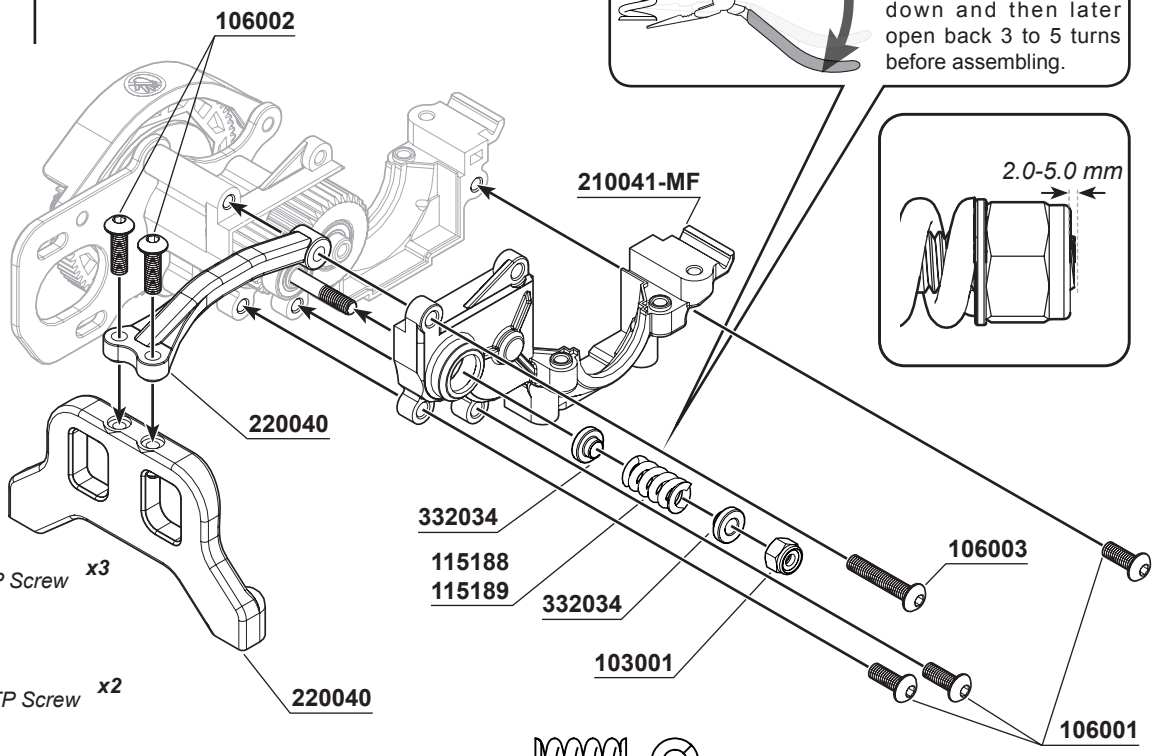

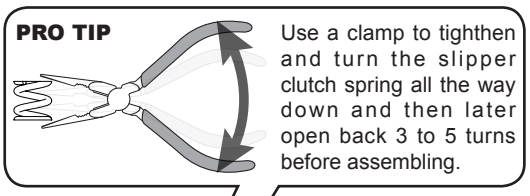



101012
Washer M3x6xT0.5mm ***x2***



103001
M3 Nut Lock ***x1***



106001
M3x8mm Hex Socket OH/TP Screw ***x3***



106002
M3x10mm Hex Socket OH/TP Screw ***x2***



106003
M3x16mm Hex Socket OH/TP Screw ***x1***



115188
SWORKz 1/10 Slipper Clutch Spring (D1.4x12mm) ***x1***

115189
SWORKz 1/10 Slipper Clutch Spring (D1.6x12mm)(RD) ***x1***

6



106002
M3x10mm Hex Socket OH/TP Screw ***x8***

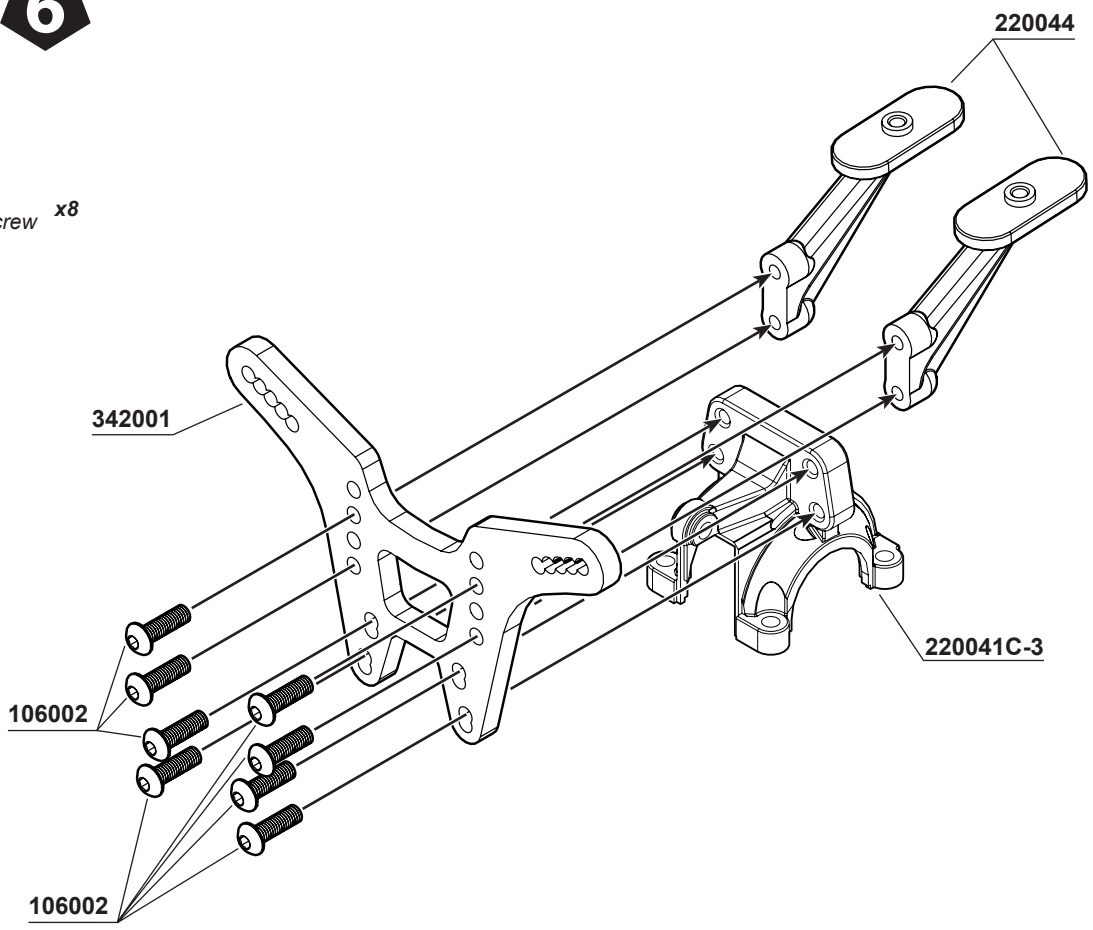

BAG C

7



106002
M3x10mm Hex Socket OH/TP Screw ***x4***



106008
M3x12mm Hex Socket OH/TP Screw ***x1***

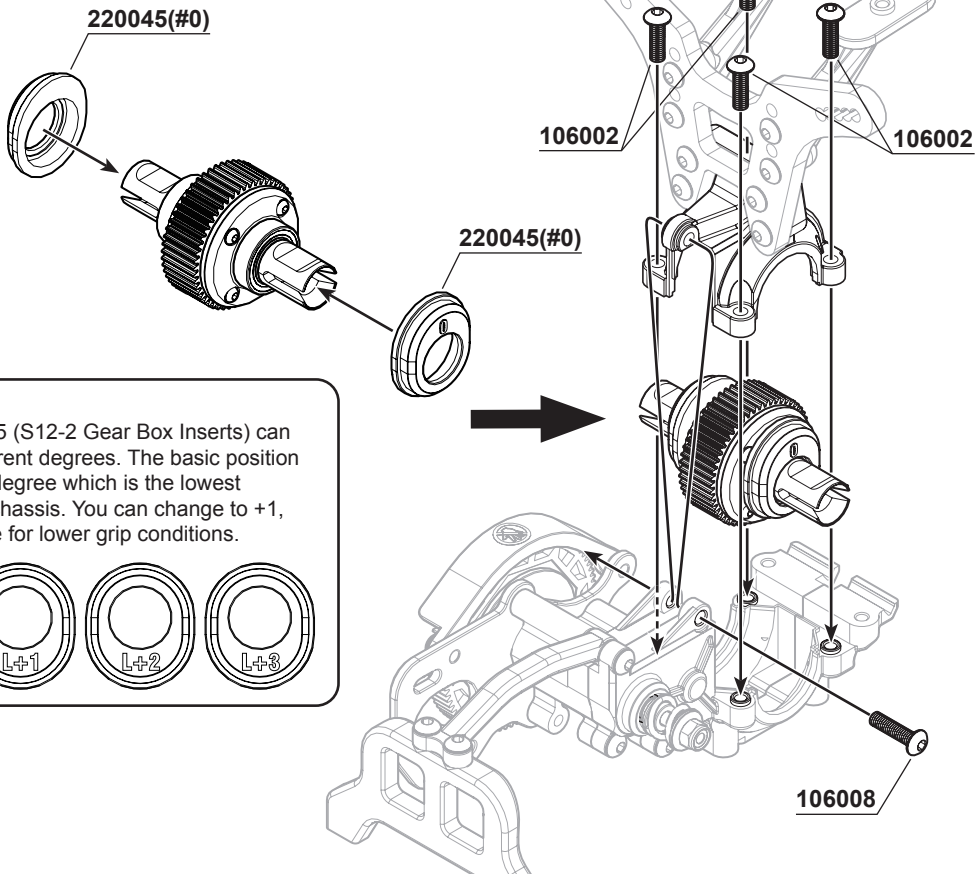

PRO TIP:
The part 220045 (S12-2 Gear Box Inserts) can be put in 4 different degrees. The basic position to start is zero degree which is the lowest position to the chassis. You can change to +1, +2 or +3 degree for lower grip conditions.

8



104004
M3x3mm Set Screw ***x1***



101026
Washer M3x6xT1.5mm ***x2***

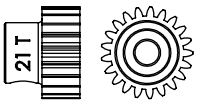

330410
SWORKz 1/10 Motor Pinion Gear 21T ***x1***



106001
M3x8mm Hex Socket OH/TP Screw ***x2***

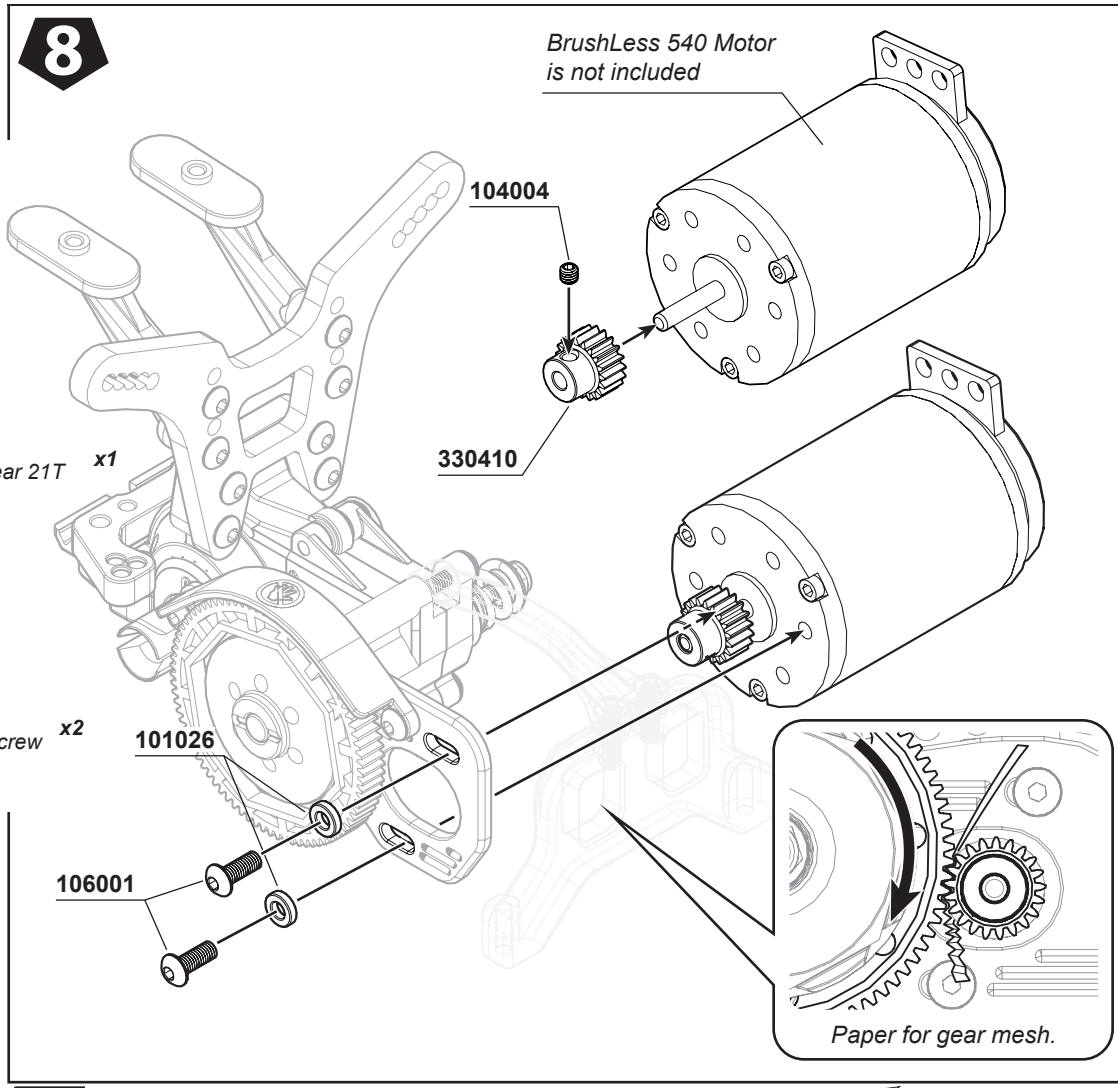

BAG D

9 L R x2

OPTION:
SW-220037H
S12-2 Side Guard Set in Pro-composite Hard Material

108003
M3x10mm FH/ST HEX Screw *x6*

108006
M3x8mm FH/ST HEX Screw *x8*

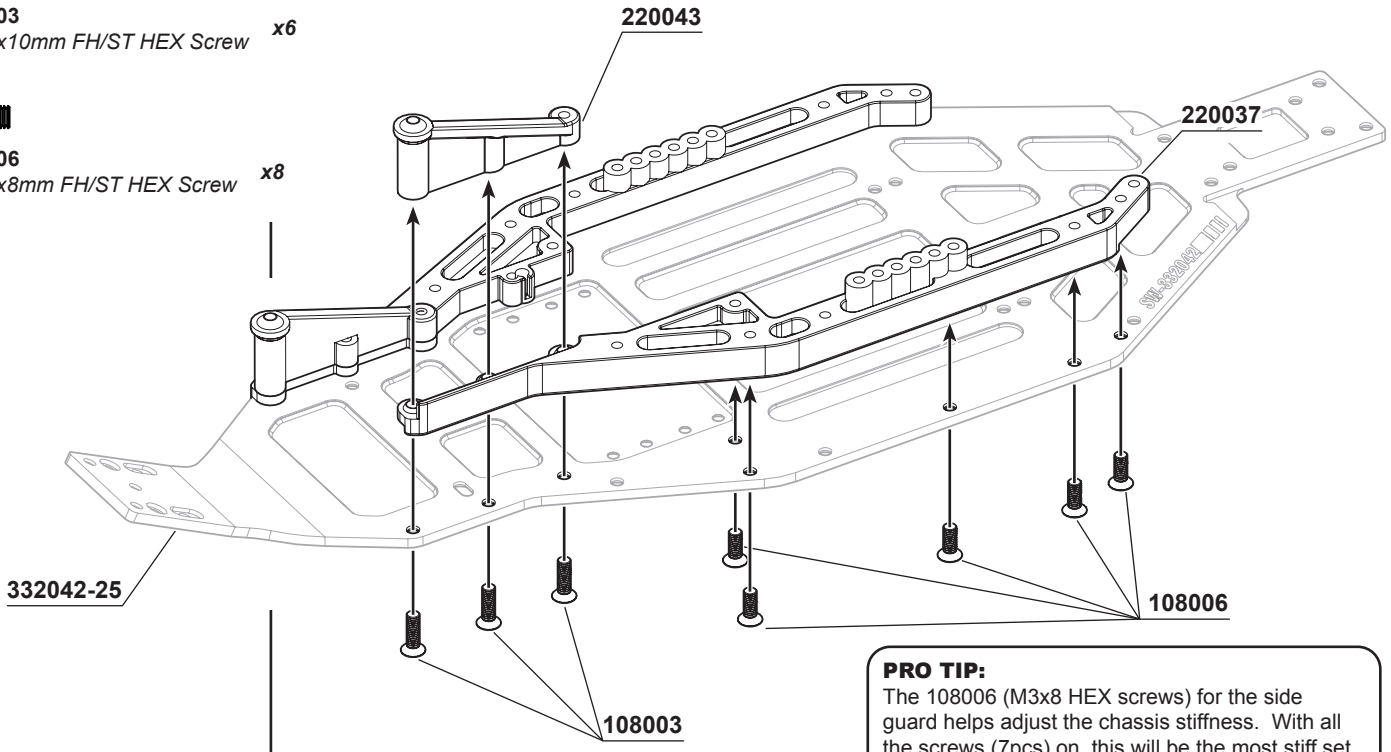

PRO TIP:
The 108006 (M3x8 HEX screws) for the side guard helps adjust the chassis stiffness. With all the screws (7pcs) on, this will be the most stiff set up for the chassis and will provide the least grip. Standard suggestion to start build is with 4 screws.

10 1 2 3

OPTION:

SW-115173	S12-2 Front Sway Bar 1.1mm
SW-115174	S12-2 Front Sway Bar 1.2mm
SW-115175	S12-2 Front Sway Bar 1.3mm

108006
M3x8mm FH/ST HEX Screw *x2*

108014
M3x4mm FH/ST HEX Screw *x1*

106020
M2.5x5mm Hex Socket OH/TP Screw *x2*

334060-7
Steering Linkage Ball Stud 5.5-L7.0mm *x2*

101026
SWORKz Aluminum Washer 3X6X1.5mm *x2*

104004
M3x3mm Set Screw *x3*

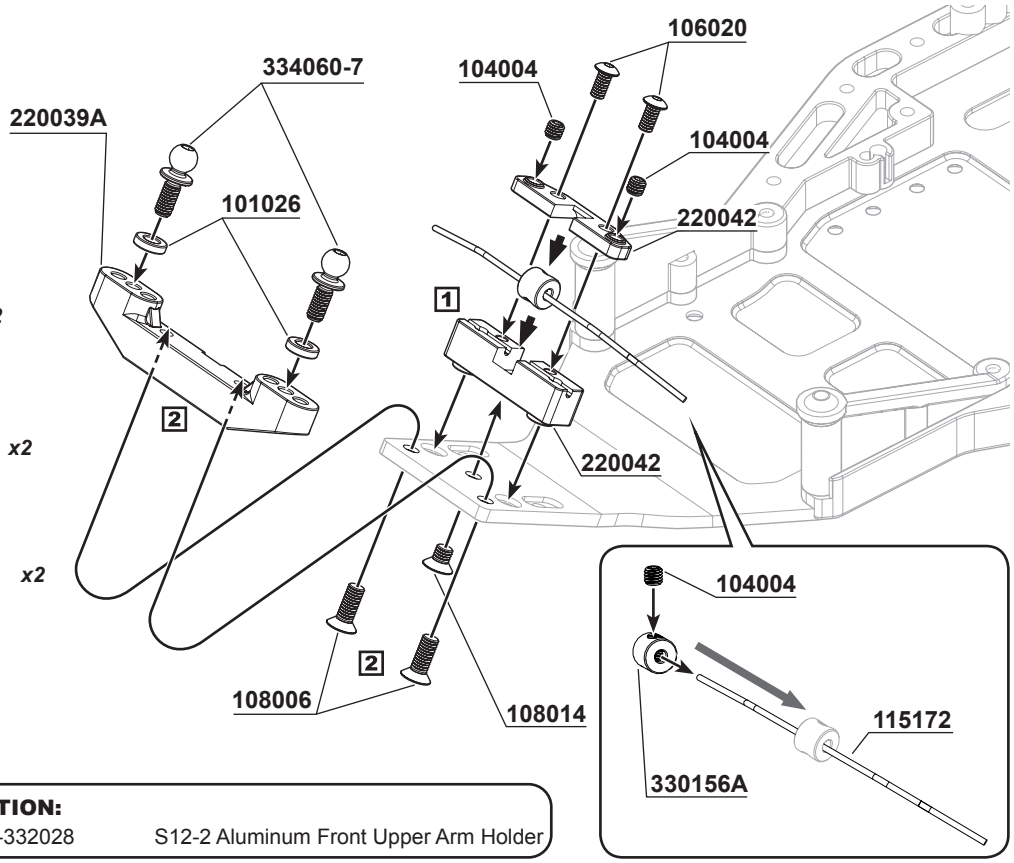

OPTION:

SW-332028	S12-2 Aluminum Front Upper Arm Holder

11



106002
M3x10mm Hex Socket OH/TP Screw *x2*



330331
Steering Linkage Ball Stud 5mm *x1*



334060-4
Steering Linkage Ball Stud 5.5-L4.0mm *x2*



116015
Ball Bearing 5x8x2.5mm *x4*



117003
Flange Ball Bearing 3x6x2.5mm *x2*



101007
Washer 3x8x0.5mm *x2*

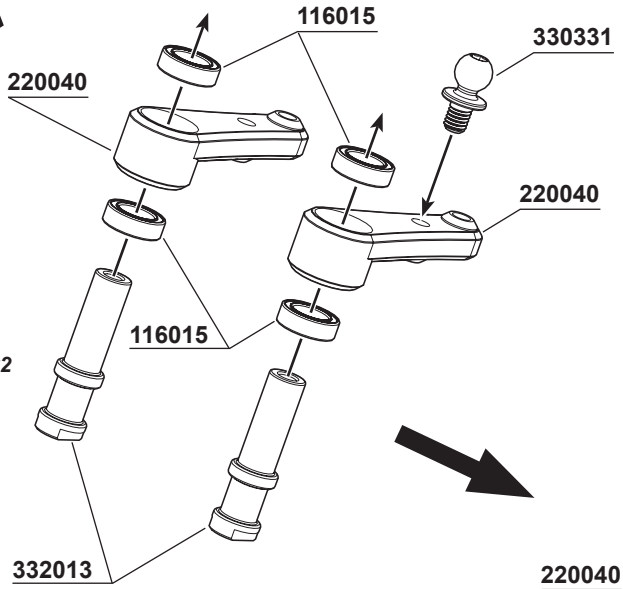

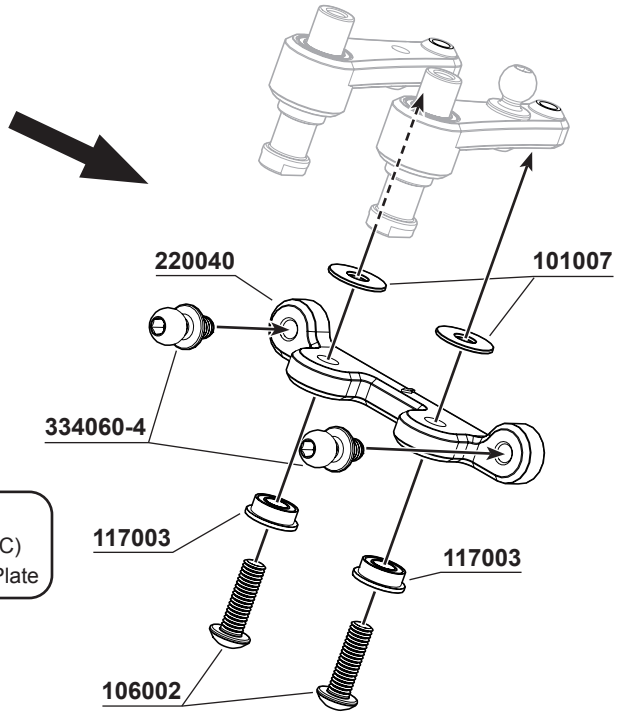

OPTION:

SW-332045	S12-2 Aluminum Servo Savor Arms (2PC)
SW-332046	S12-2 Aluminum Servo Savor Steering Plate

BAG D

12



108001
M3x12mm FH/ST HEX Screw *x2*

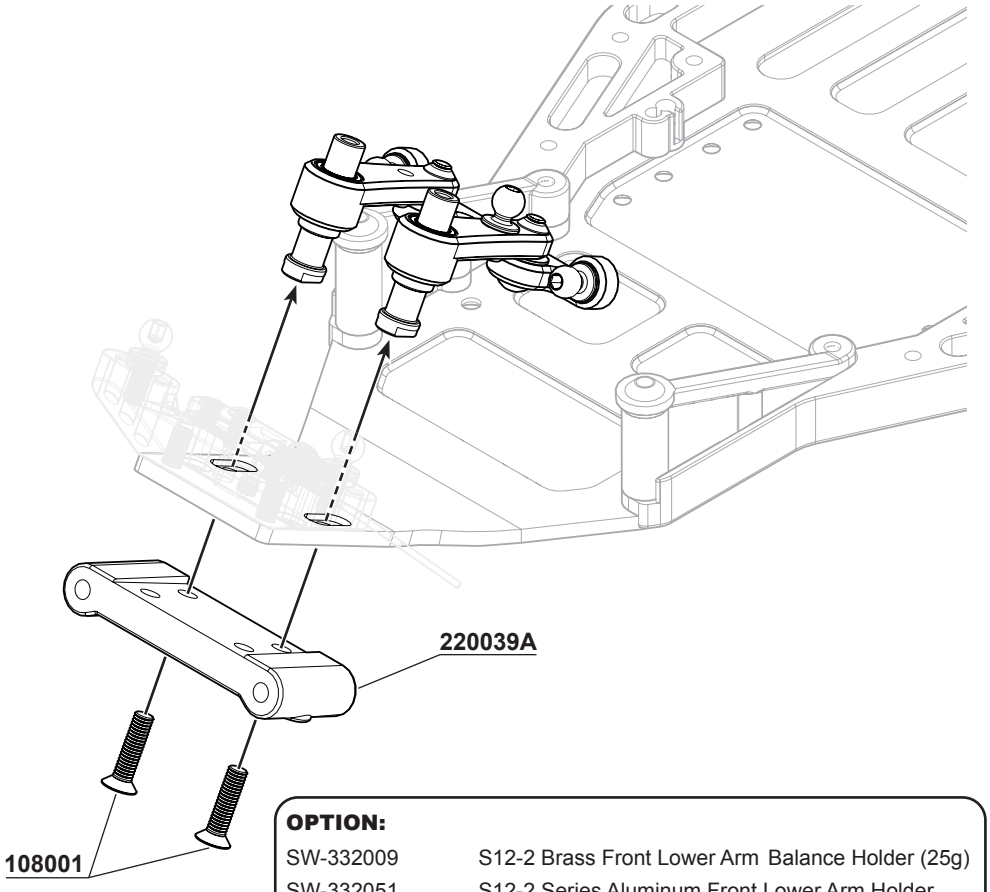

OPTION:

SW-332009	S12-2 Brass Front Lower Arm Balance Holder (25g)
SW-332051	S12-2 Series Aluminum Front Lower Arm Holder

13



106002
M3x10mm Hex Socket OH/TP Screw ***x4***



108006
M3x8mm FH/ST HEX Screw ***x3***



104012
M3x12mm Set Screw ***x1***



101012
Washer M3x6xT0.5mm ***x4***



101026
SWORKz Aluminum Washer 3X6X1.5mm ***x2***



330643
Steering Linkage Ball Stud 5mm ***x2***

STEP 4.
Take out the aluminum washers (SW-101026) when using a non-regular servo size.

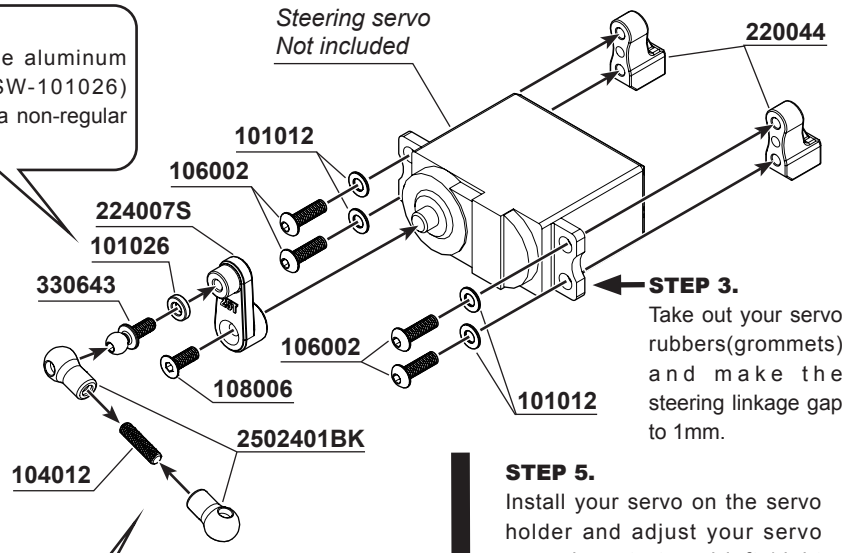

STEP 3.
Take out your servo rubbers(grommets) and make the steering linkage gap to 1mm.

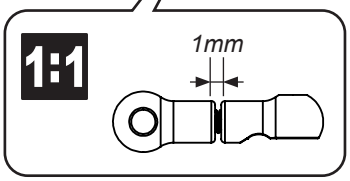

STEP 5.
Install your servo on the servo holder and adjust your servo saver horn to travel left /right equally.

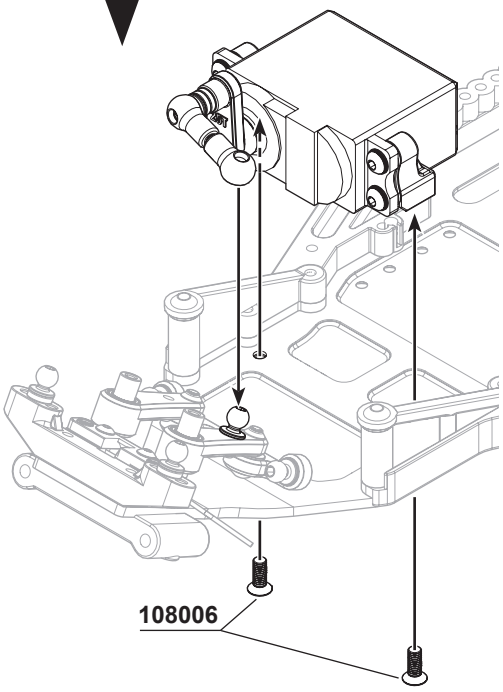

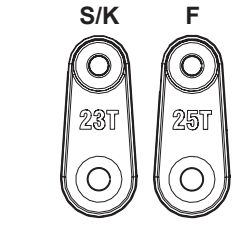

224007S-23 **224007S-25**

STEP 1.
Please make sure that your steering servo is centered before mounting the servo saver horn.

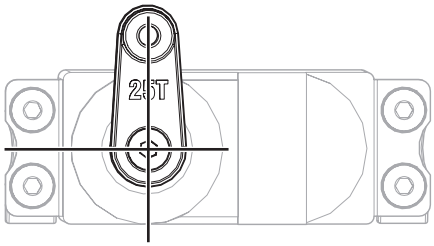

STEP 2.
Mount the servo saver horn in a 90 degree position onto the servo.

14



108003
M3x10mm FH/ST HEX Screw ***x4***



106002
M3x10mm Hex Socket OH/TP Screw ***x2***



106017
M3x14mm Hex Soket OH/TP Screw ***x2***

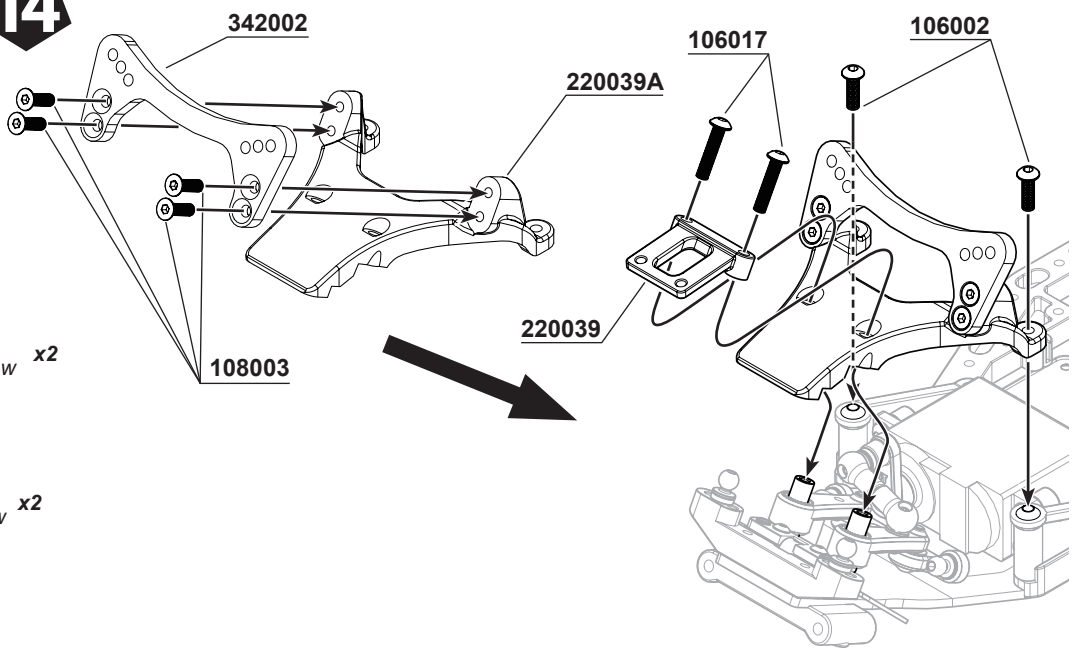

BAG D

15



108005
M3x14mm FH/ST HEX Screw ***x2***



106020
M2.5x5mm Hex Socket OH/TP Screw ***x2***



104004
M3x3mm Set Screw ***x4***

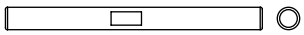

330537
Rear Hub Carriers Hinge Pin ***x2***

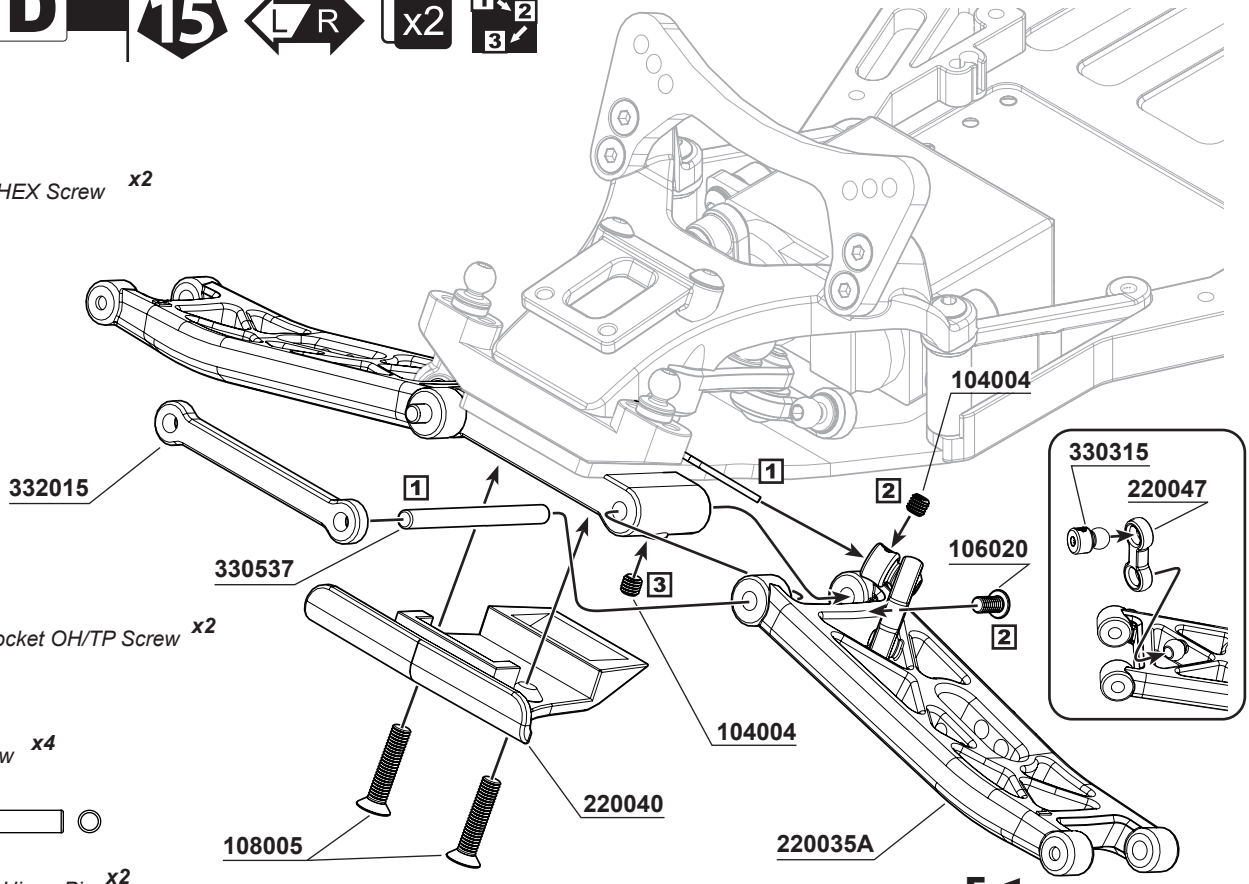

OPTION:
SW-220035H
S12-2 Front Lower Arm Set in Pro-composite Hard Material

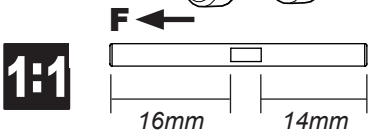

16



106010
M3x6mm FH/ST HEX Screw ***x2***



106001
M3x8mm Hex Socket OH/TP Screw ***x4***



106008
M3x12mm Hex Socket OH/TP Screw ***x2***



106017
M3x14mm Hex Soket OH/TP Screw ***x2***



103001
M3 Nut Lock ***x2***



116010R
Ball Bearing 5x10x4mm (Red Rubber Case) ***x4***



101026
SWORKz Aluminum Washer 3X6X1.5mm ***x2***



334060-7
SWORKz 1/10 Linkage Ball Stud D5.5mm x L7mm) ***x4***

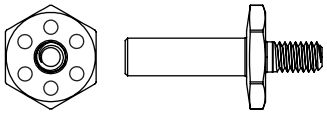

332014
Steering Hub Hinge Pin ***x2***

Right

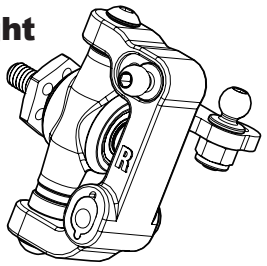

Left

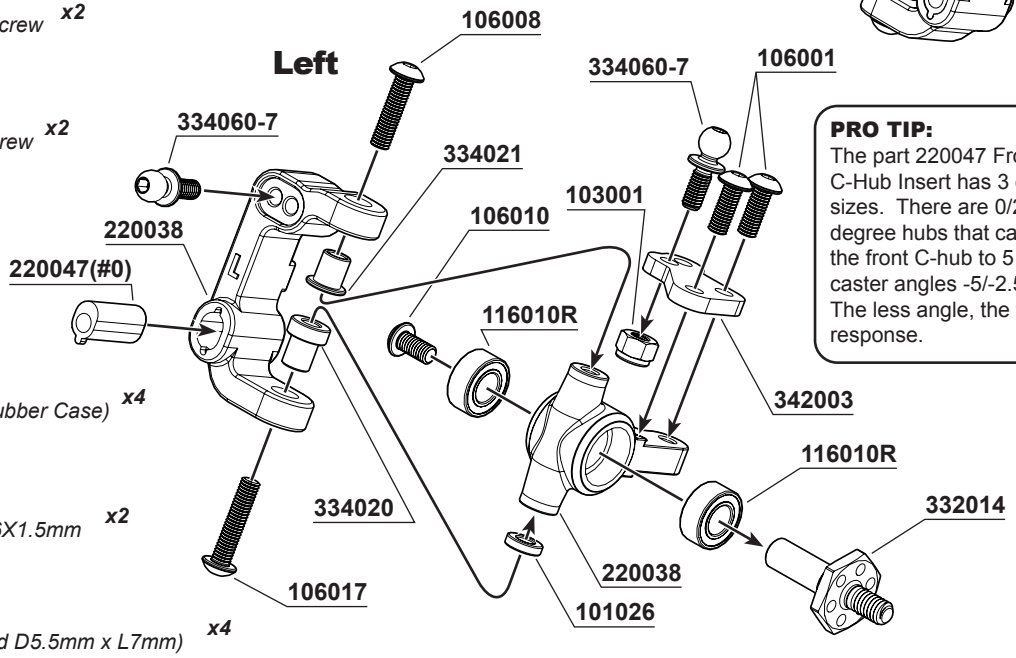

PRO TIP:
The part 220047 Front C-Hub Insert has 3 different sizes. There are 0/2.5/5 degree hubs that can change the front C-hub to 5 different caster angles -5/-2.5/0/2.5/5. The less angle, the faster the response.

17

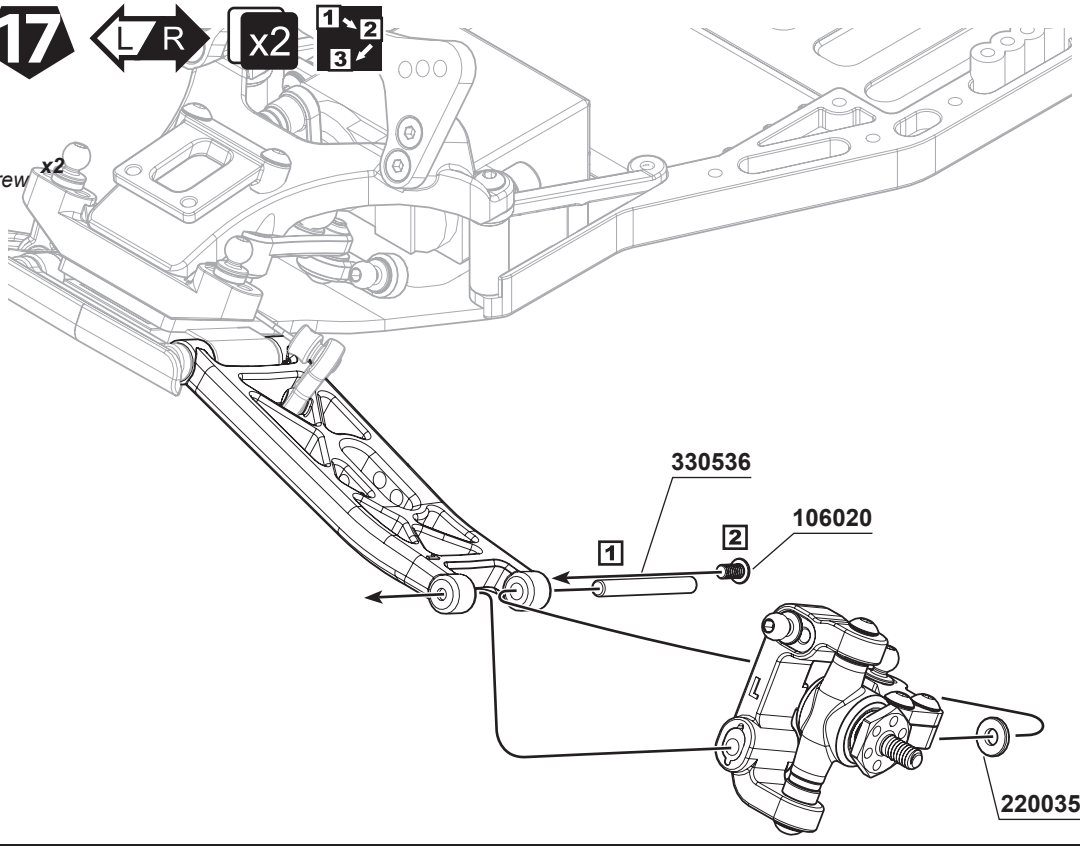

106020
M2.5x5mm Hex Socket OH/TP Screw ***x2***

220035
Insert M3x7xT1mm ***x2***

330536
Rear Hub Carriers Hing Pin ***x2***

18



106001
M3x8mm Hex Socket OH/TP Screw ***x4***

106014
M2.0x6mm Hex Socket OH/TP Screw ***x2***

212001
S12-2 Rear CVD Drive Shaft Set 62mm ***x2***

338011
SWORKz Pinion Gear Stopper (5x7x5.1mm) ***x2***

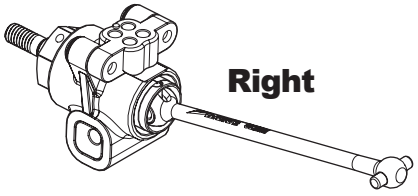

330283
Pin M2x10mm ***x2***

PRO TIP:
The part 220046 has 3 Rear Hub Inserts that come in different types which offers several different rear hub angles. Please take note when you are using different insert hub positions, the rear drive axle also change in distance.

116010R
Ball Bearing 5x10x4mm (Red Rubber Case) ***x4***

116019R
Ball Bearing 5X13X4mm (Red Rubber Case) ***x2***

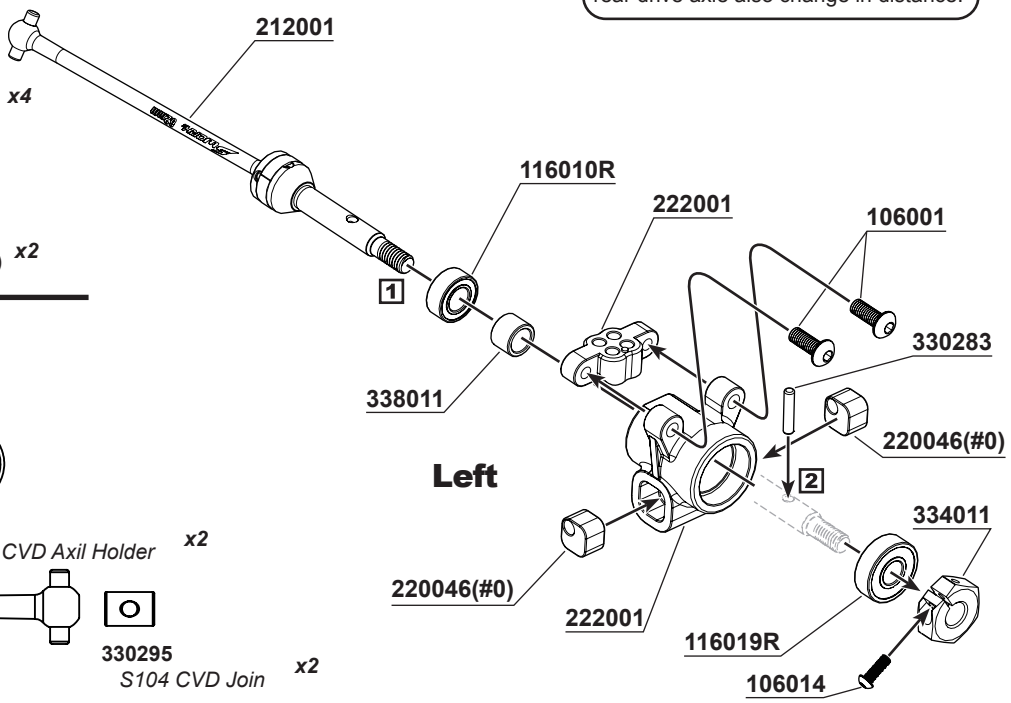

Spare Parts of CVD

330283
Pin M2x10mm ***x2***

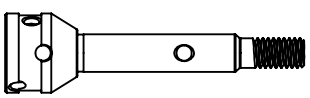

332010
S12-2 CVD Axil ***x2***



332011
S12-2 CVD Axil Holder ***x2***



332012
S12-2 Rear Drive Shaft (62mm) ***x2***

330295
S104 CVD Join ***x2***

19 L R x2

106020
M2.5x5mm Hex Socket OH/TP Screw *x2*

101026
SWORKz Aluminum Washer 3X6X1.5mm *x2*

104002
M3X10mm Set Screw *x2*

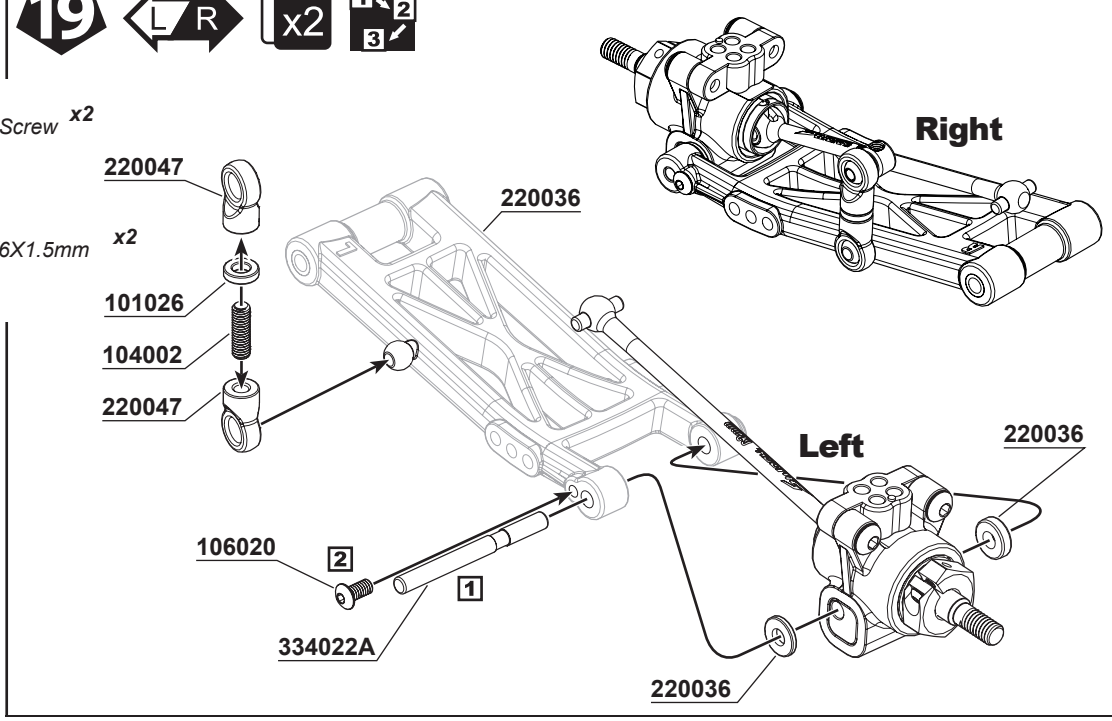

20 L R x2

108006
M3x8mm FH/ST HEX Screw *x4*

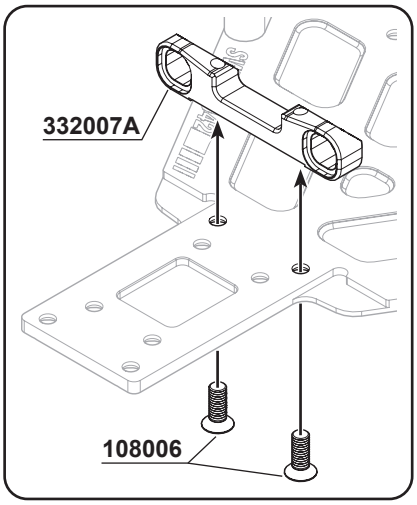

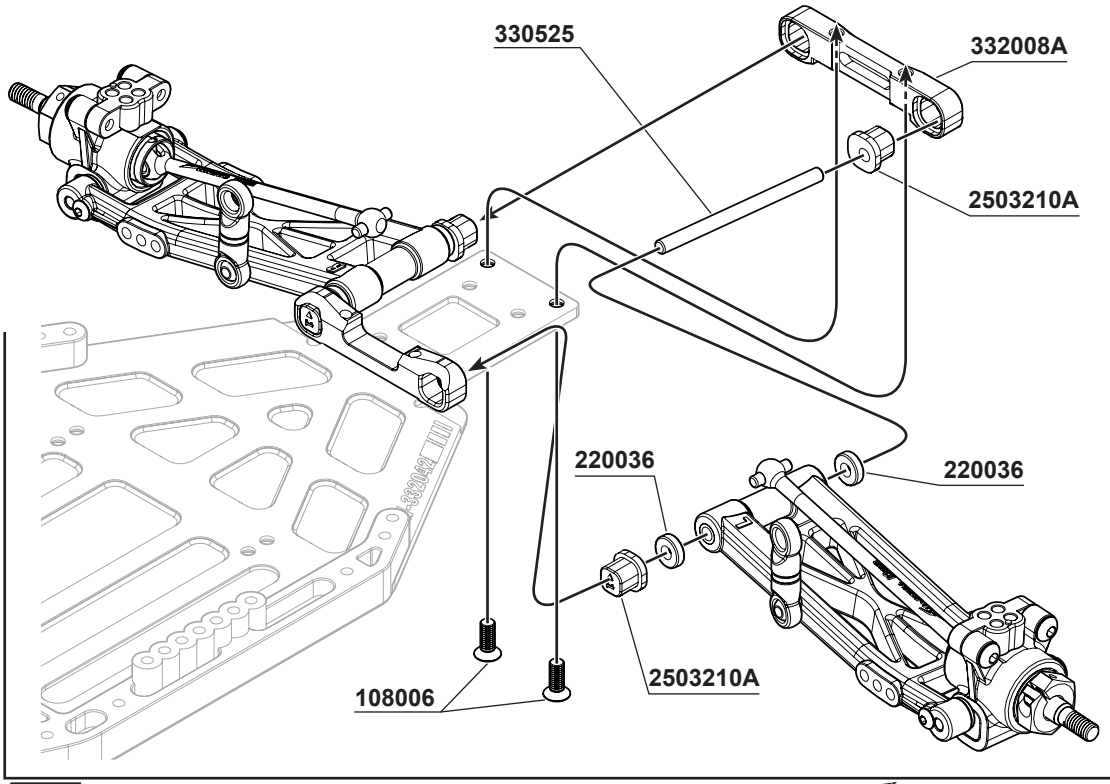

21

OPTION:

SW-115176	S12-2 Rear Sway Bar 1.2mm
SW-115178	S12-2 Rear Sway Bar 1.4mm
SW-115179	S12-2 Rear Sway Bar 1.5mm
SW-115180	S12-2 Rear Sway Bar 1.6mm

104004
M3x3mm Set Screw ***x3***

104005
M3x4mm Set Screw ***x2***

106002
M3x10mm Hex Socket OH/TP Screw ***x2***

106010
M3x6mm FH/ST HEX Screw ***x2***

101026
SWORKz Aluminum Washer 3X6X1.5mm ***x2***

334060-7
SWORKz 1/10 Linkage Ball Stud D5.5mm x L7mm) ***x2***

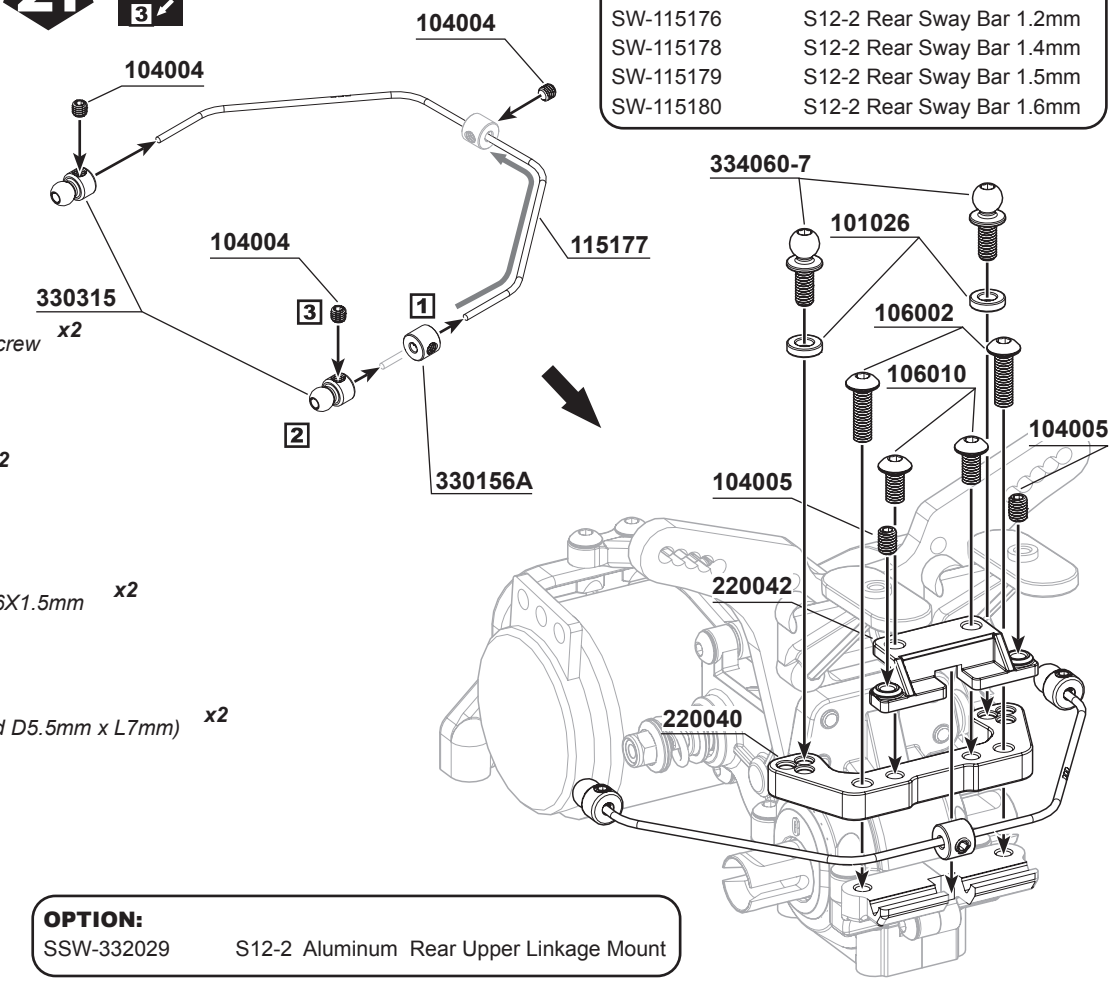

OPTION:

SSW-332029	S12-2 Aluminum Rear Upper Linkage Mount

22

108003
M3x10mm FH/ST HEX Screw ***x6***

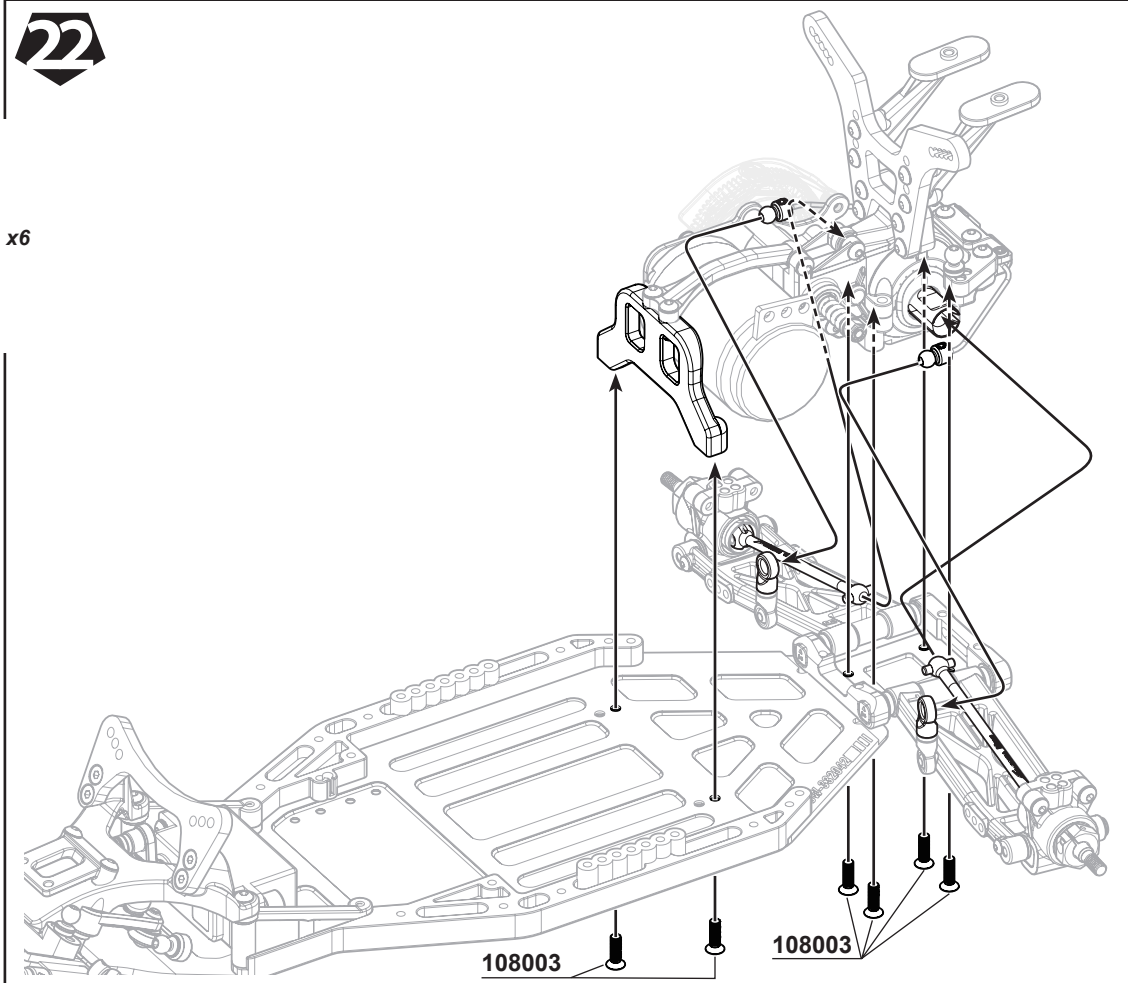

23

L R x2

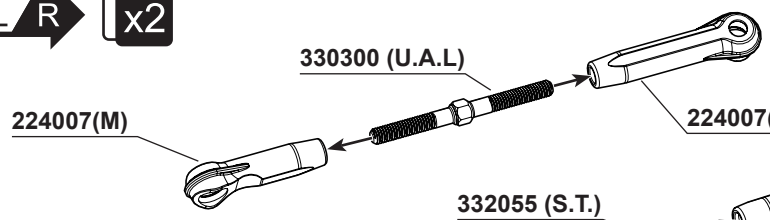

1:1

(U.A.L.) 16.7 mm

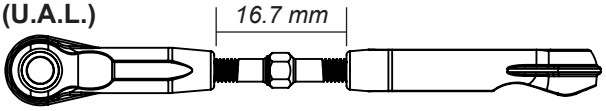

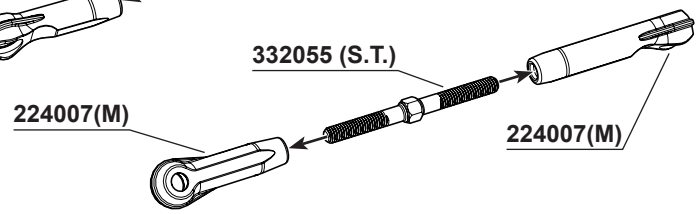

(S.T.) 25.4 mm

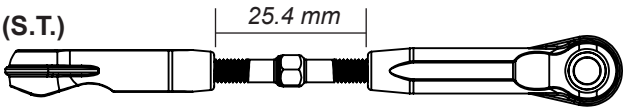

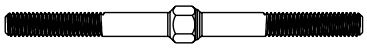

332055
SWORKz 1/10 Series Linkage Turnbuckle M3X45mm x2

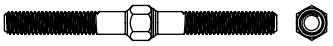

330300
Rear Upper Sus. Arm Turnbuckles x2

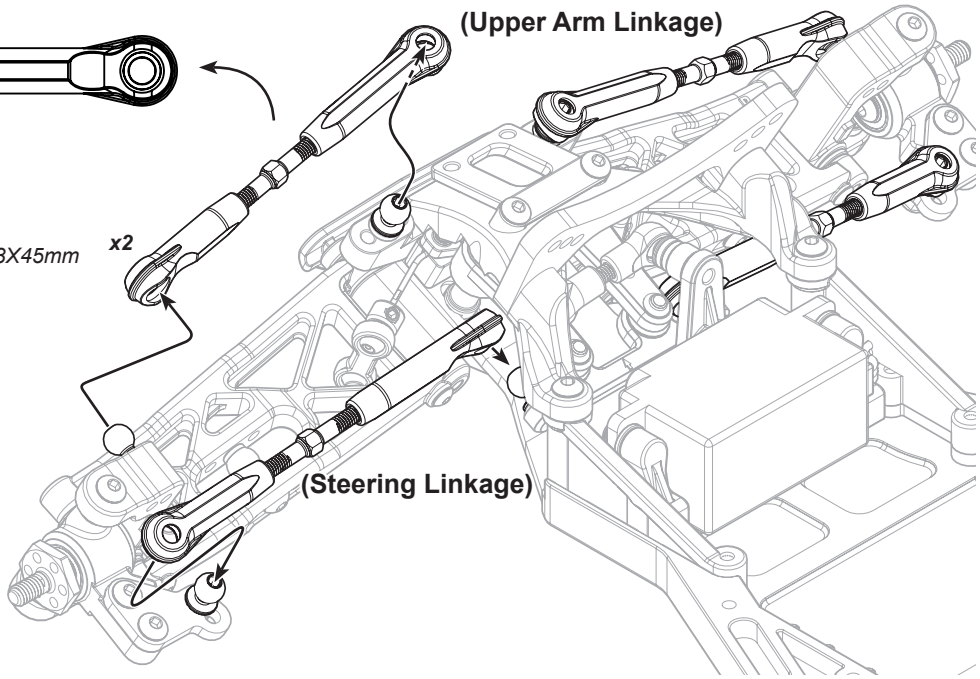

24

L R x2

1:1

17.6 mm

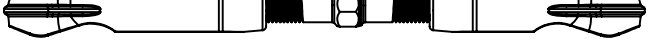



101026
SWORKz Aluminum Washer 3X6X1.5mm x2

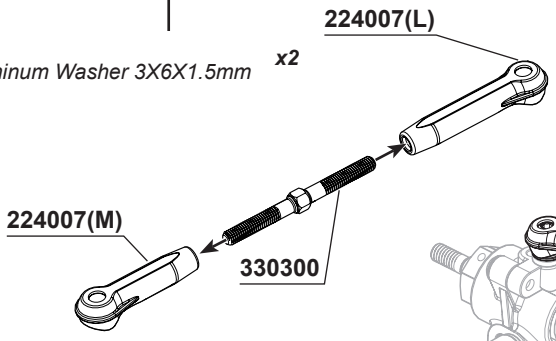



334060-7
SWORKz 1/10 Linkage Ball Stud D5.5mm x L7mm) x2

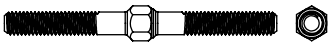

330300
Rear Upper Sus. Arm Turnbuckles x2

BAG E

25

F R x2 For Front x2 For Rear

106014
M2x6mm Hex Soket OH/TP Screw ***x4***

220049-5
Shock Washer 3.0X6.3X2.0mm ***x8***

101011
Shock Washer 2.6x6x0.5mm ***x4***

220049-5
Shock Washer 3.0X6.3X0.9mm ***x4***

400025
SWORKz 1/10 Series Pro Shock System Seal O-ring ***x8***

410049
Shock Seal Cap O-ring 8x10x1mm ***x4***

220049-1
SWORKz 1/10 Precision Plastic Shock Piston(1.6X2Holes) ***x2***

220049-2
SWORKz 1/10 Precision Plastic Shock Piston(1.7X2Holes) ***x2***

332038-SR
SWORKz 1/10 Series Pro Shock System Shorter Rear Shaft (SR-48.2mm) ***x2***

332038-SF
SWORKz 1/10 Series Pro Shock System Shorter Front Shaft (SF-41.2mm) ***x2***

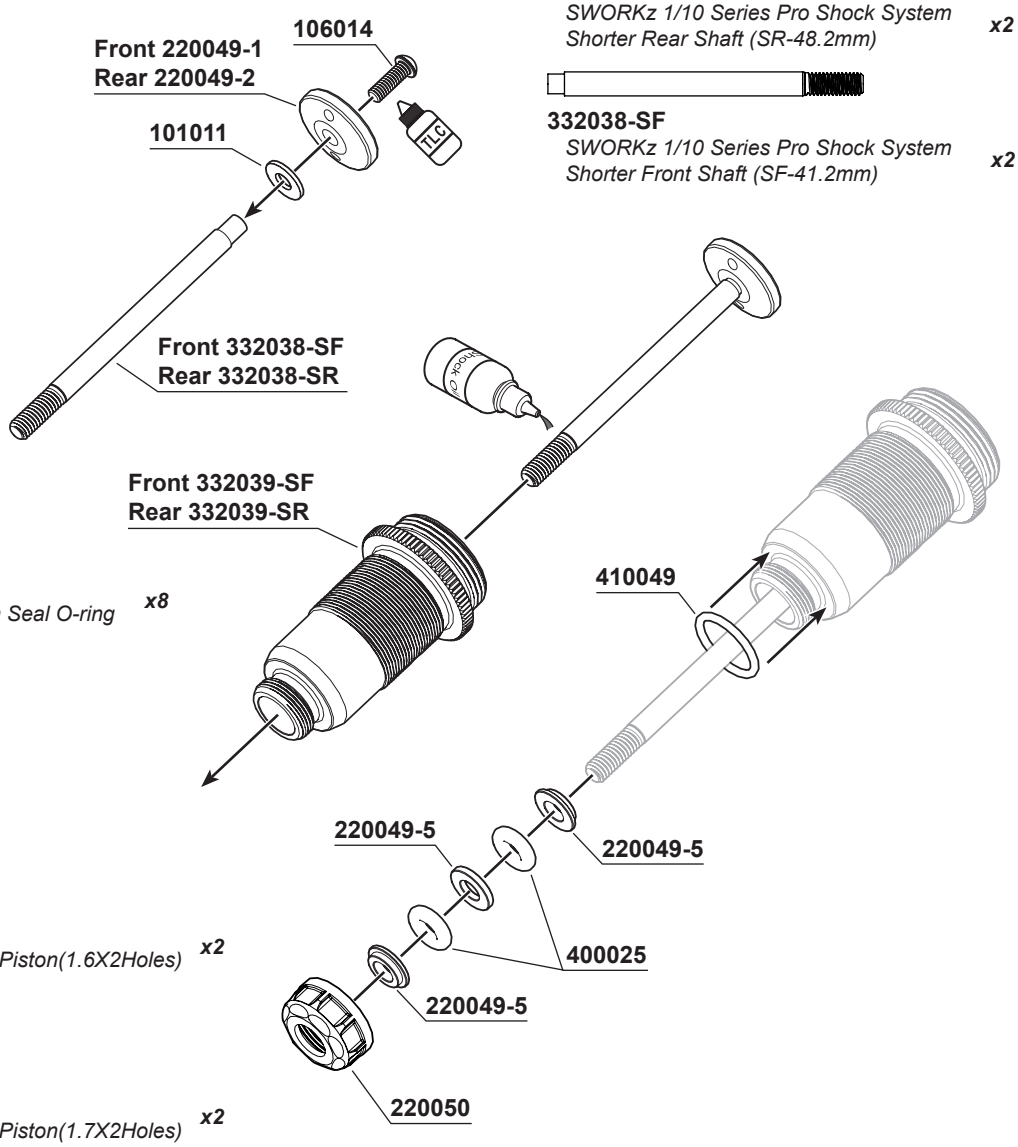

26

F R x2 For Front x2 For Rear

330134
Shock Ball Stud ***x4***

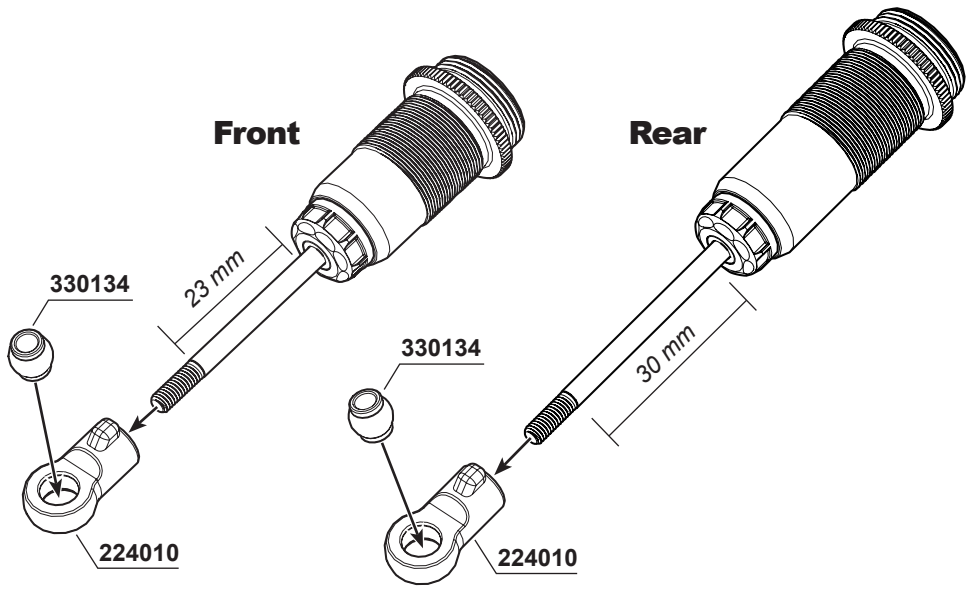

BAG E

27 F R x2 For Front x2 For Rear

108029
M2.0x4.6mm FH/ST HEX Screw (1.5mm HexHead) *x4*

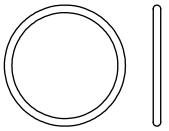

410047
SWORKz Shock Cap O-Ring (SP) *x4*

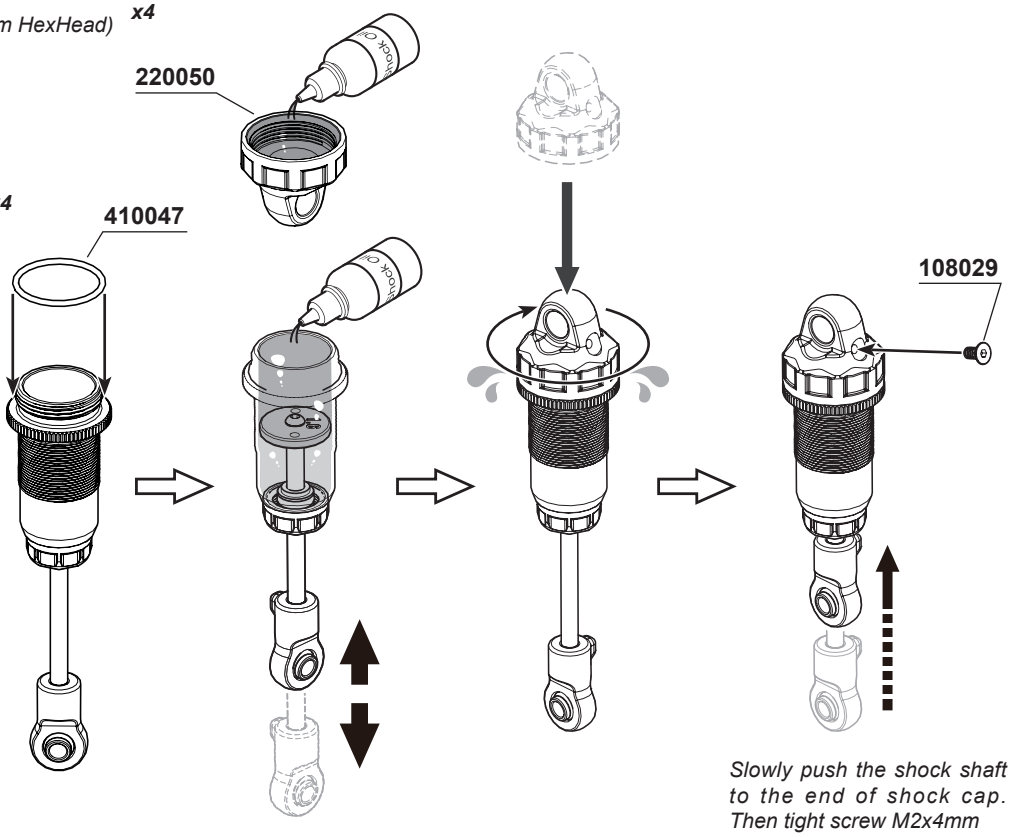

Slowly push the shock shaft to the end of shock cap. Then tight screw M2x4mm

28 F R x2 For Front x2 For Rear

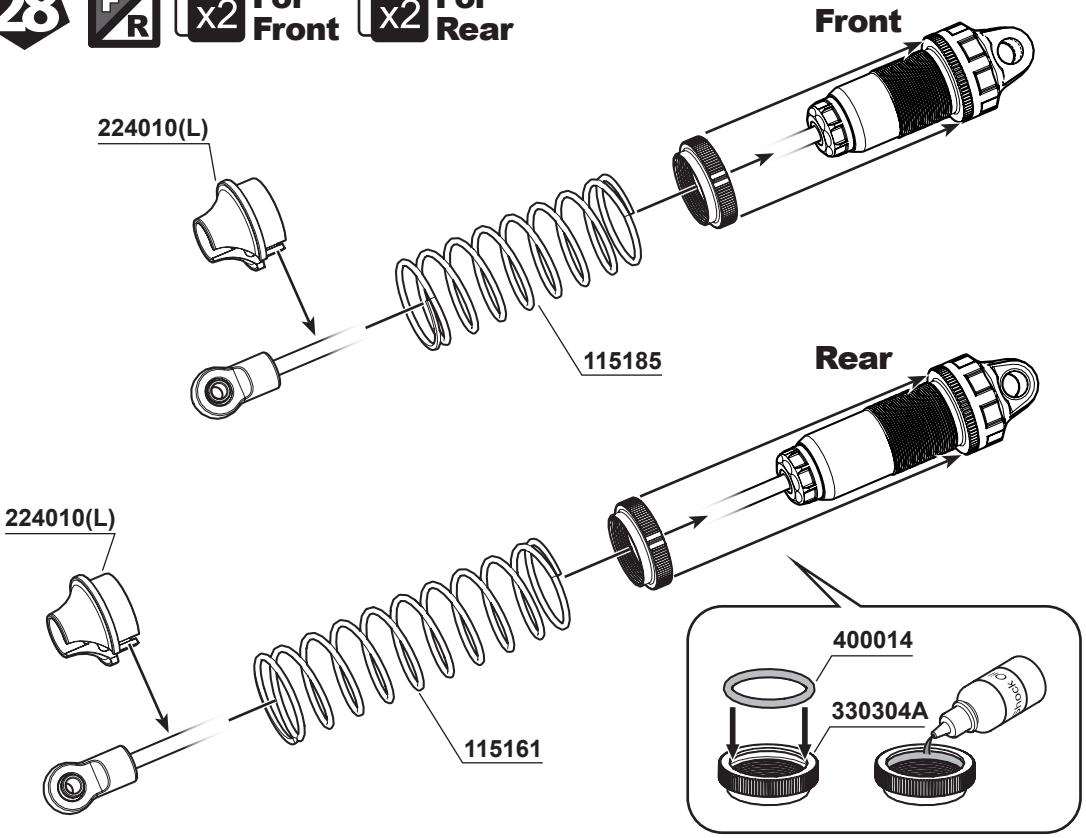

400014
O-Ring 1.5x13.5mm *x4*

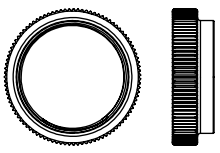

330304A
Aluminum Shock Spring Adjust Nut *x4*

OPTION:
SWC-115186 S12-2 Black Competition Front Shock Spring (US3-Dot)(38X1.2X7.0)
SWC-115187 S12-2 Black Competition Front Shock Spring (US2-Dot)(38X1.2X7.25)
SWC-115183 S35-4 Black Competition Front Shock Spring (US3-Dot)(62X1.6X7.75)
SWC-115184 S35-4 Black Competition Front Shock Spring (US2-Dot)(62X1.6X8.0)

BAG E

29 L R x2



105021
M3x6mm Taper head screw ***x2***



108001
M3x12mm FH/ST HEX Screw ***x2***



106005
M3x15mm Hex Socket OH/TP Screw ***x2***



101020A
3mm Countersunk Washers (GM) ***x2***

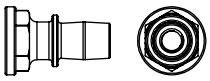

334002
Aluminum Shock Cap Stud ***x2***

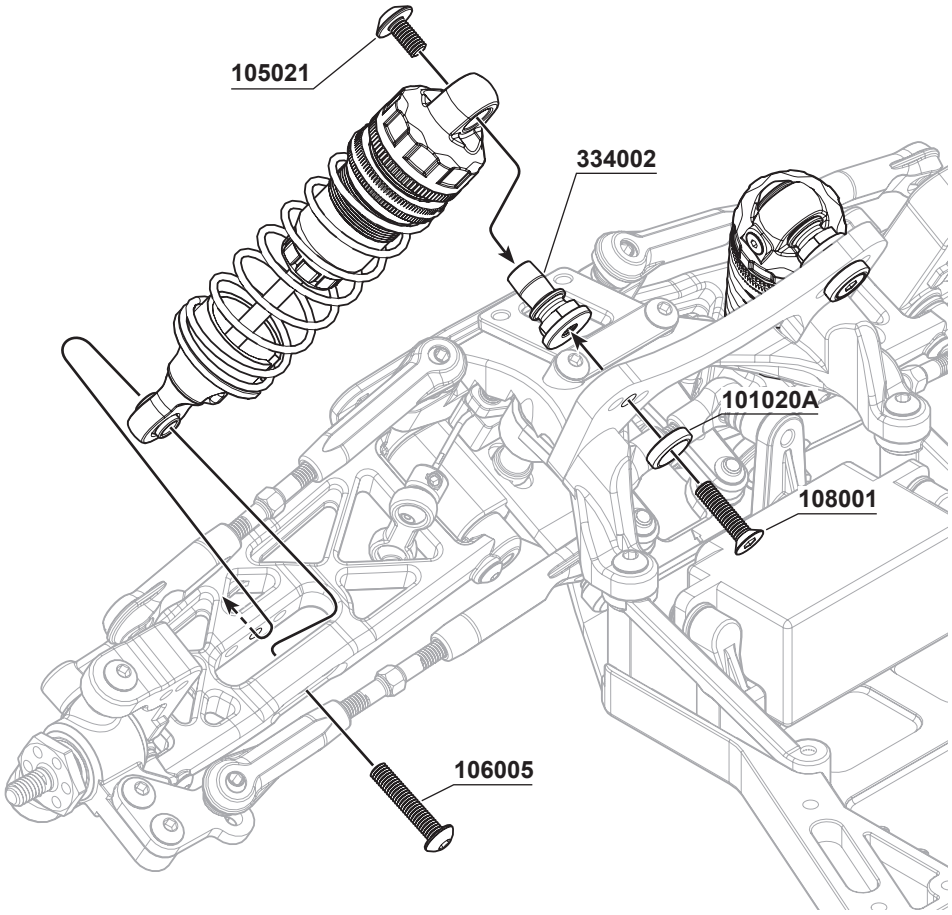

30 L R x2



105021
M3x6mm Taper head screw ***x2***



108001
M3x12mm FH/ST HEX Screw ***x2***



106008
M3x12mm Hex Socket OH/TP Screw ***x2***



101020A
3mm Countersunk Washers (GM) ***x2***

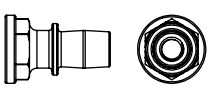

334002
Aluminum Shock Cap Stud ***x2***



103007
M3mm Nut Lock ***x2***



104009
M3x16mm Set Screw ***x2***

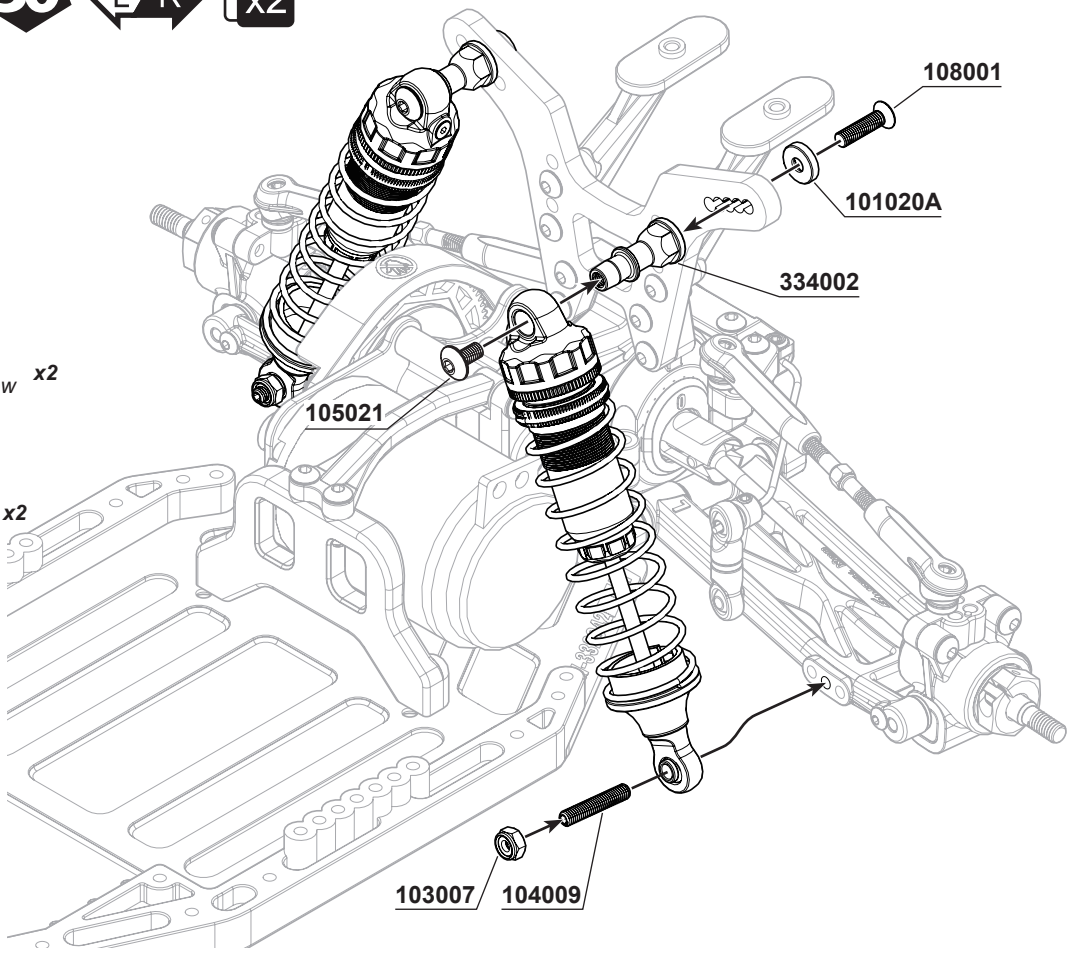

BAG D

31

104004
M3x3mm Set Screw ***x1***

108028
M2.6x4mm Flat Head Screw - Hex Socket ***x4***

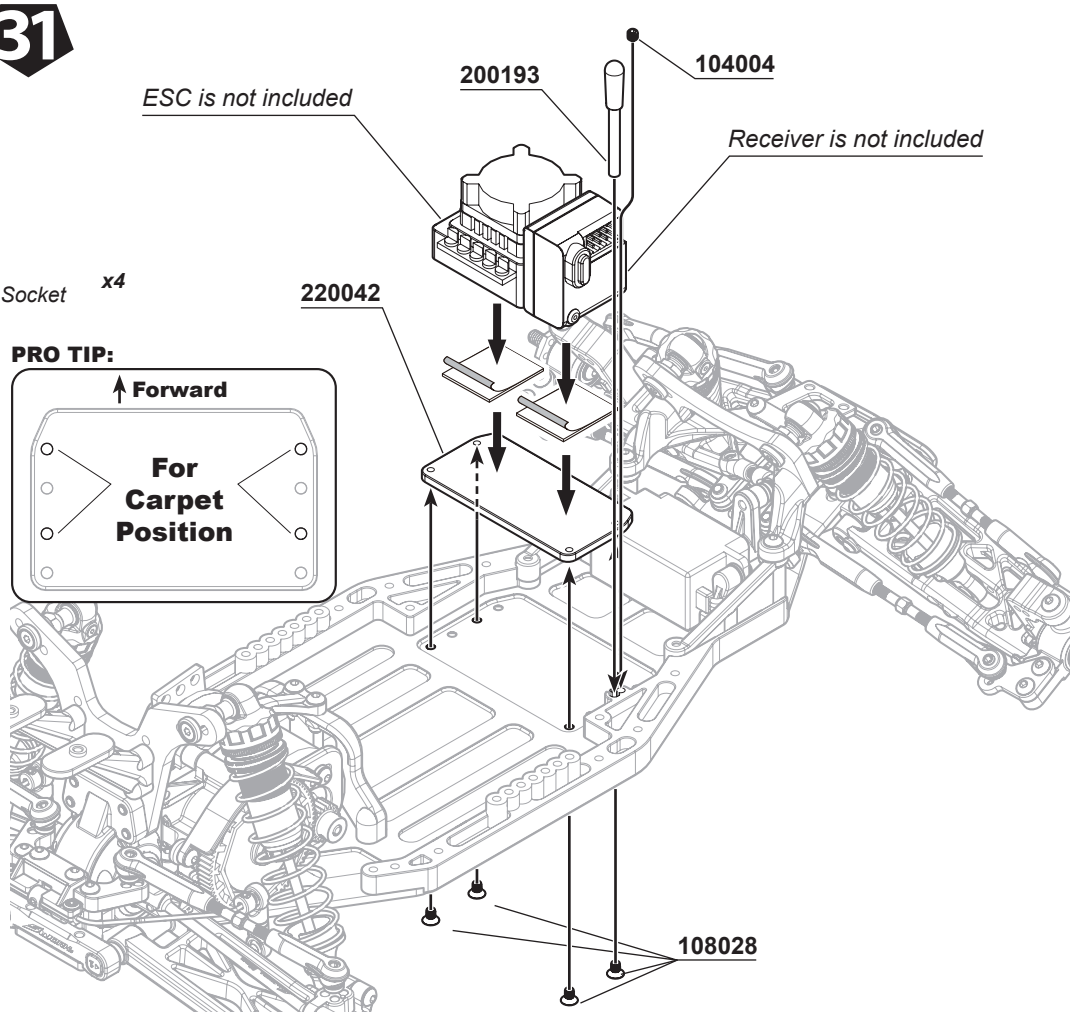

32

106008
M3x12mm Hex Socket OH/TP Screw ***x2***

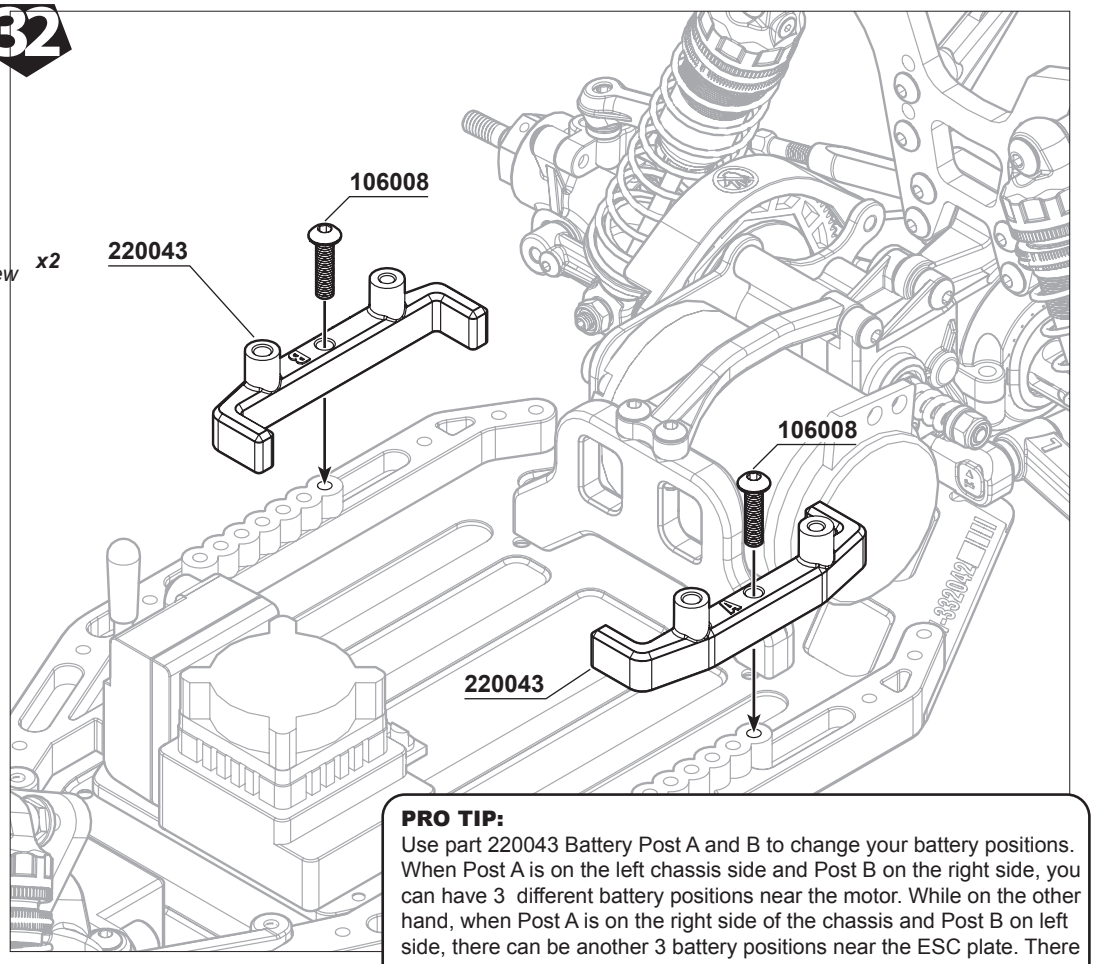

PRO TIP:
Use part 220043 Battery Post A and B to change your battery positions. When Post A is on the left chassis side and Post B on the right side, you can have 3 different battery positions near the motor. While on the other hand, when Post A is on the right side of the chassis and Post B on left side, there can be another 3 battery positions near the ESC plate. There are a total of 6 different positions to place the shorty battery.

BAG D

33



106002
M3x10mm Hex Socket OH/TP Screw ***x2***



106009
M3x25mm Hex Socket OH/TP Screw ***x2***

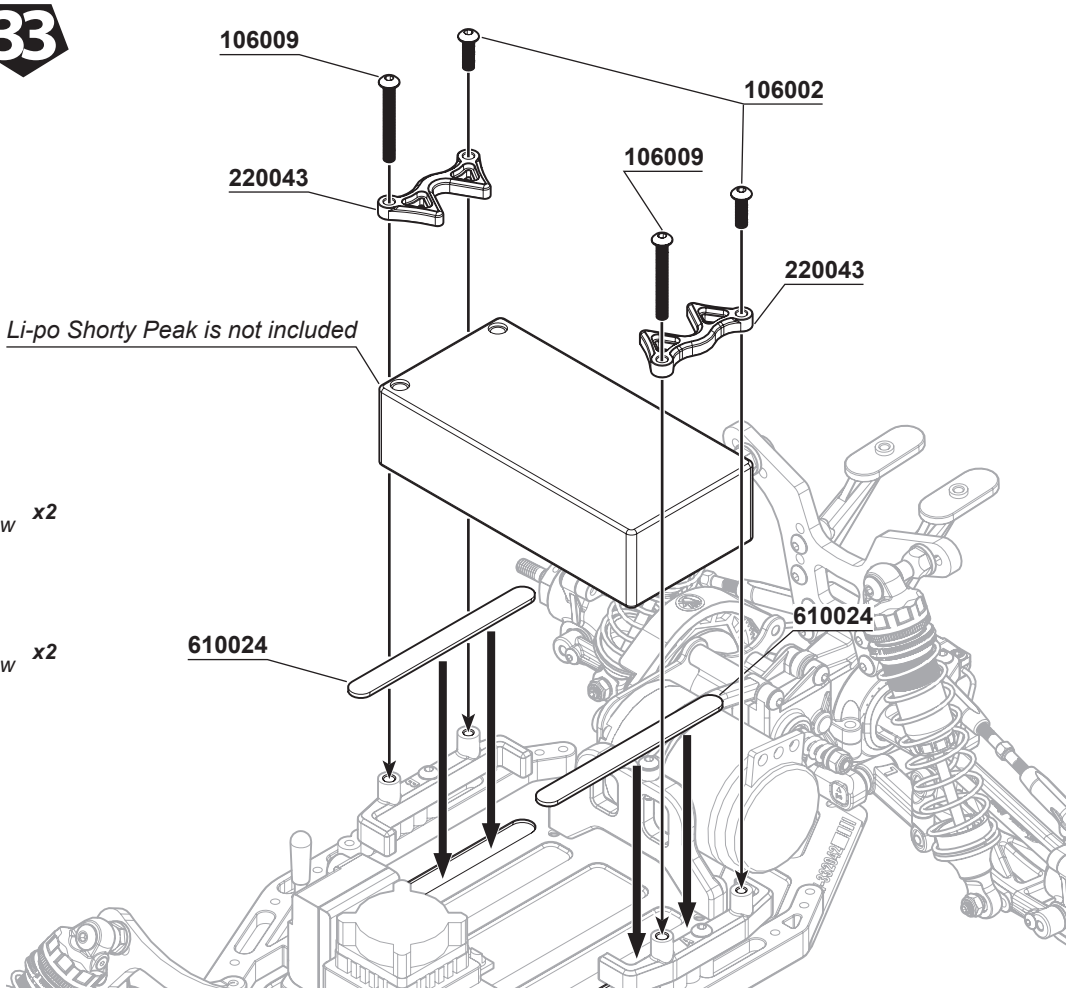

BAG F

34 F/R L/R x2

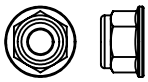

103002
Flange M4 Nut Lock ***x4***

35



108007
M3x6mm FH/ST HEX Screw ***x2***



101020A
3mm Countersunk Washers (RD) ***x2***

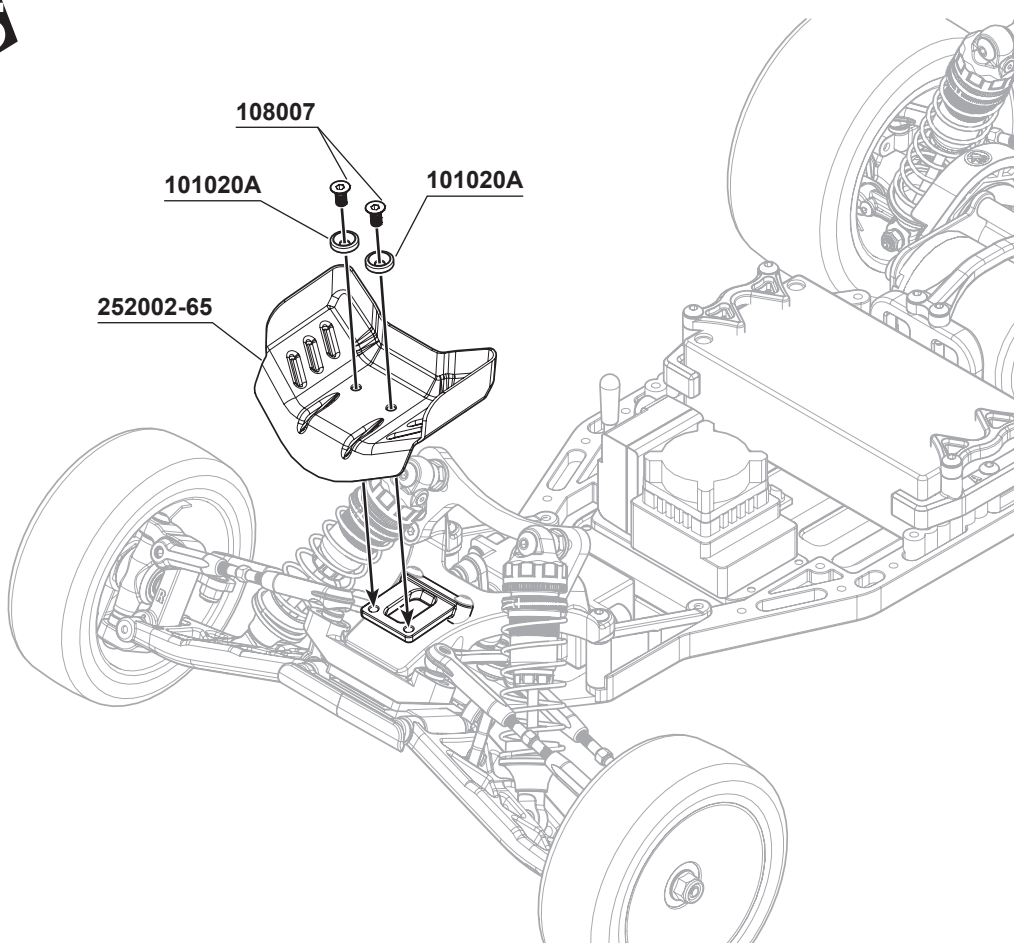

36



108003
M3x10mm FH/ST HEX Screw ***x2***

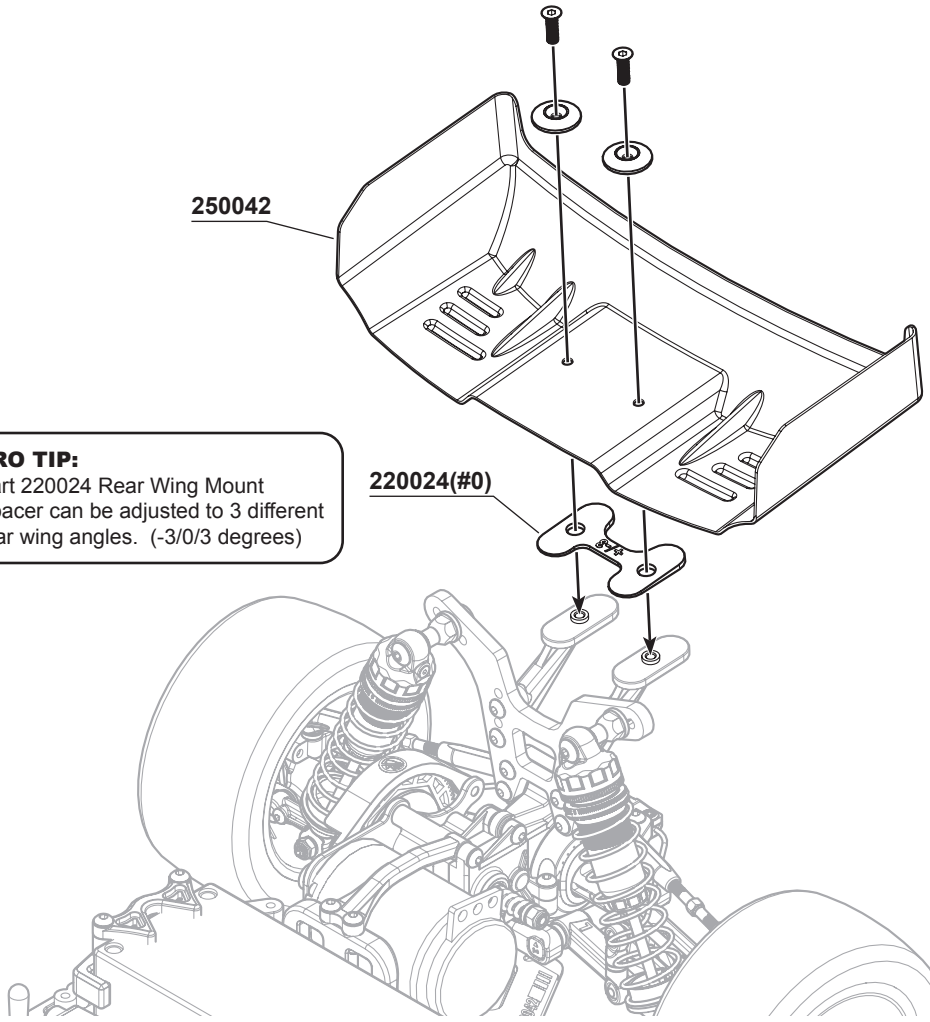

PRO TIP:
Part 220024 Rear Wing Mount Spacer can be adjusted to 3 different rear wing angles. (-3/0/3 degrees)

37 Body shell painting preparation

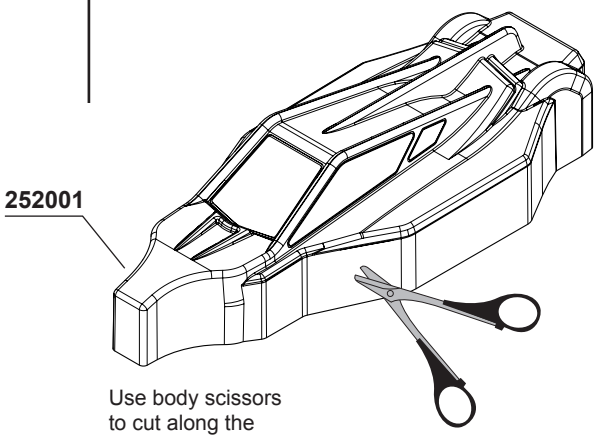

Use body scissors to cut along the body lines.

Use water/washing solution to clean body.

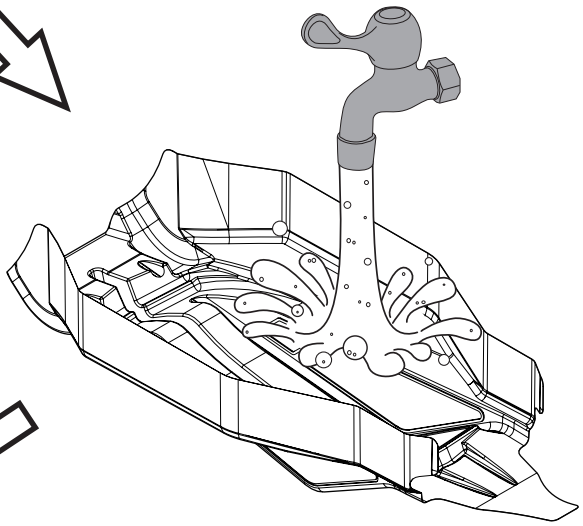

Apply window masks as shown.

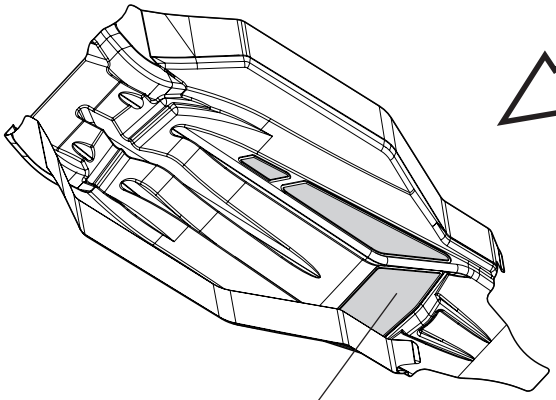

Paint body.

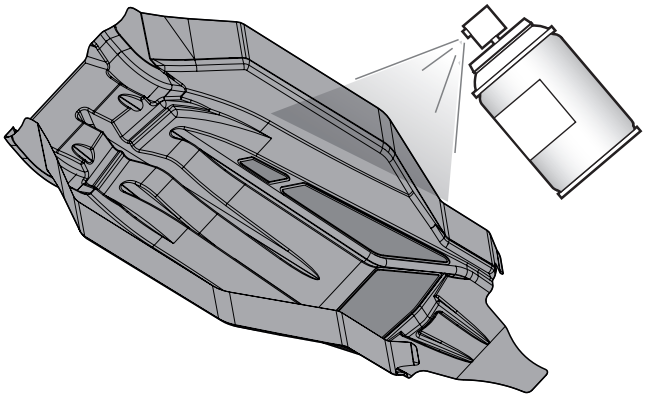

Cut and put 0.8x5cm loop decal strap in same position as side Guard fillister.

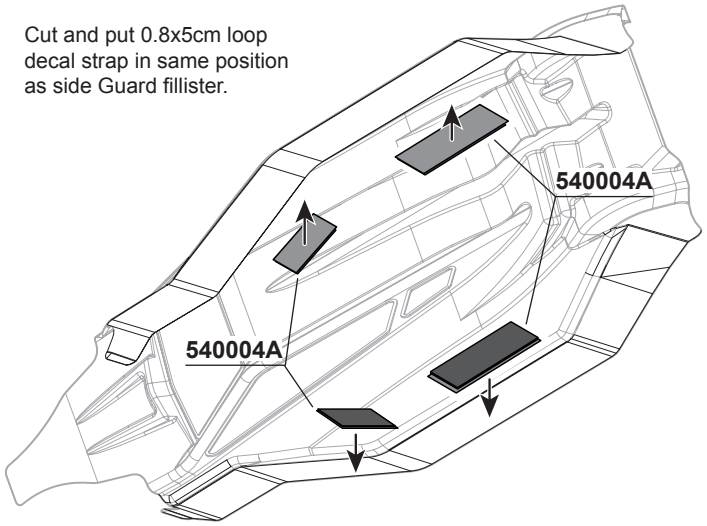

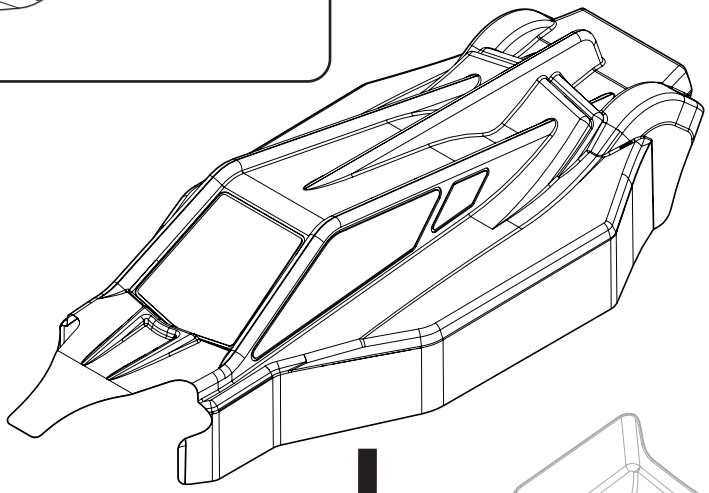

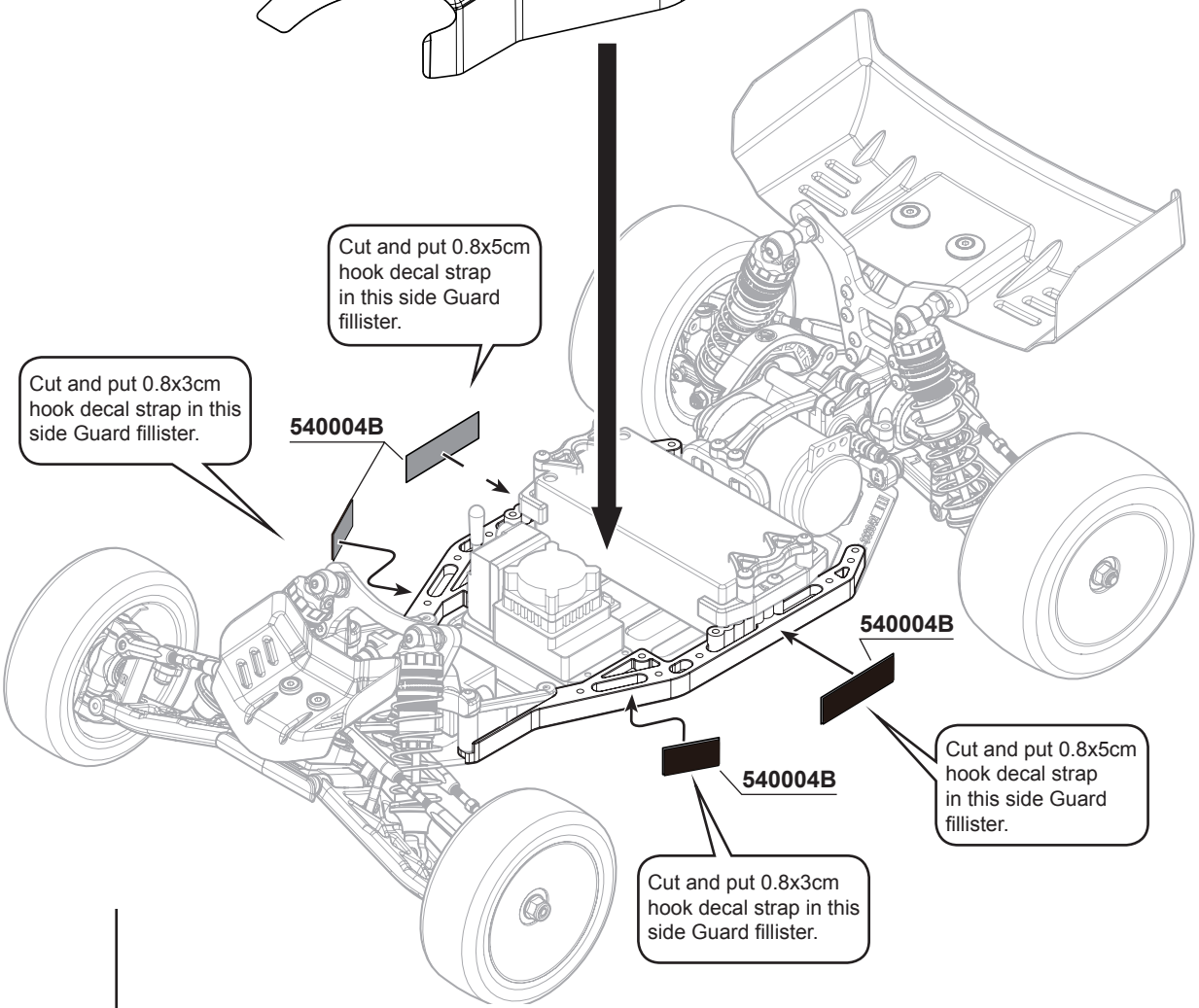

S12-2C EVO — SWORKz SET-UP SHEET

1/10 Off Road 2WD Racing Electric Buggy

www.sworkz.com

Race time / Lap: _____

Best lap: _____

Name: SWORKz
Date:
Track: CARPET Track

Diff. Oil
Rear: 7000

Diff. Type
☑ Gear Diff
☐ Ball Diff

Track Conditions
Size: ☑ Open ☐ Med. ☐ Tight
Traction: ☑ High ☐ Med. ☐ Low ☐ Wet
Surface: ☑ Smooth ☐ Med. ☐ Bumpy

Tire

Front		Rear	
Type:	Option (Schumacher)	Type:	Option (Schumacher)
Foam:	No	Foam:	Option (Schumacher)

Electric System
ESC Type: Option (Maclan M32T Pro 160A)
Motor Type: Option (Maclan V3m 6.5t)
Motor Gear/Spur Gear: 21/81
Battery Type: Option (T-PRO 4400mAh LCG)

Front Suspension

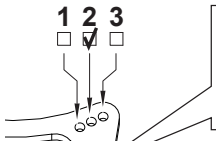

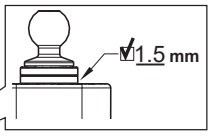

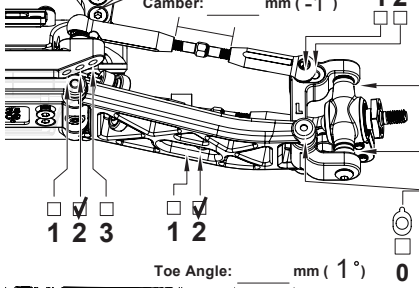

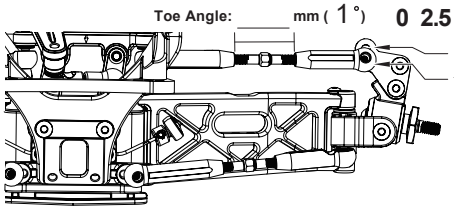

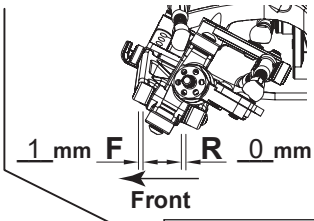

Front Lower Arm Holder
☑ 25° ☐ 30°

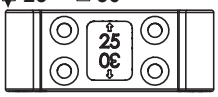

☑ Standard
☐ 25g Brass

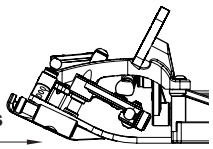

Front Sway bar ☑ Use 1.0 mm
☐ None

Diff. Position

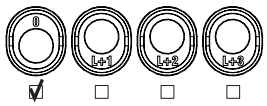

☑ ☐ ☐ ☐

Front Lower Arm Holder Adjustment ☐ 0.5mm ☐ 1mm

Ride Highe: 14 mm



Oil: #500
Spacer: 1 mm
Pistons: 2Hx1.6mm
Spring: US 4

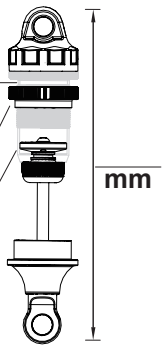

Rear Suspension

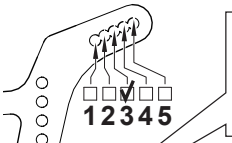

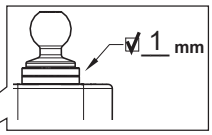

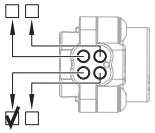

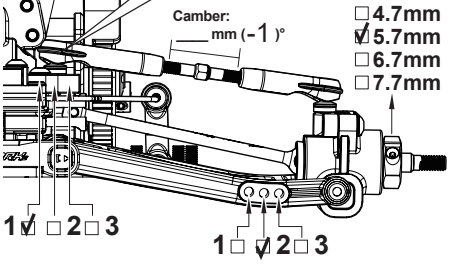

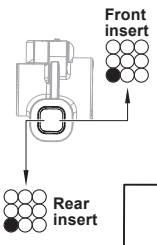

Wing Angle ☑ 0 ☐ +3 ☐ -3

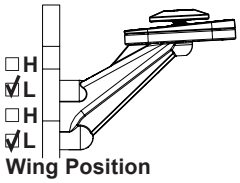

Wing Position

Notes:

Rear Sway bar ☑ Use 1.3 mm
☐ None

Ride Highe: 14.5 mm

Body: Kit
Rear Wing: Kit
Front Wing: Kit

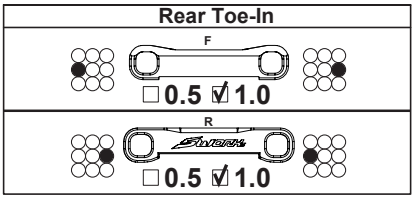

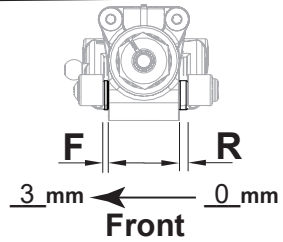



Oil: #500
Spacer: 1 mm
Pistons: 2Hx1.7mm
Spring: L3

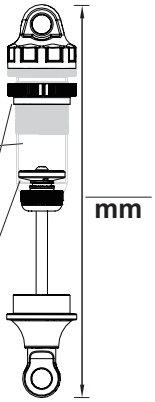

Option Parts List

Front lower arm
☐ Carbon composite Hard Material ☑ Standard Material

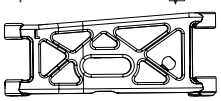

Rear lower arm
☐ Carbon composite Hard Material ☑ Standard Material

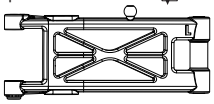

Side guard
☐ Carbon composite Hard Material ☑ Standard Material



S12-2C EVO

1/10 Off Road 2WD Racing Electric Buggy

SWORKZ www.sworkz.com

SET-UP SHEET

Race time / Lap: _____

Best lap: _____

Name: _____

Date: _____

Track: _____

Diff. Oil

Rear: _____

_____

Diff. Type

□ Gear Diff

□ Ball Diff

Track Conditions

Size: □ Open □ Med. □ Tight

Traction: □ High □ Med. □ Low □ Wet

Surface: □ Smooth □ Med. □ Bumpy

Tire

Front	Rear
Type: _____	Type: _____
Foam: _____	Foam: _____

Electric System

ESC Type: _____

Motor Type: _____

Motor Gear/Spur Gear: _____

Battery Type: _____

Front Suspension

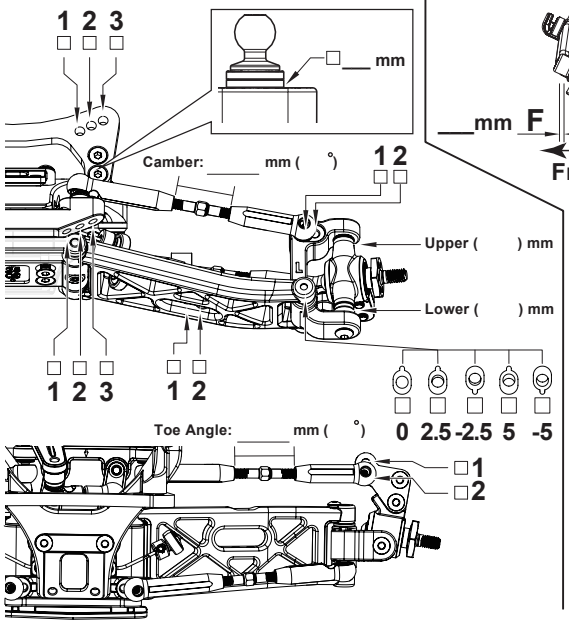

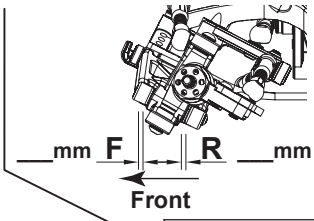

Front Lower Arm Holder

□ 25° □ 30°

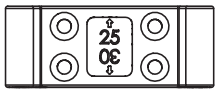

□Standard

□25g Brass

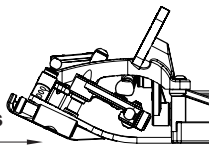

Front Sway bar □Use _____ mm

□None

Diff. Position

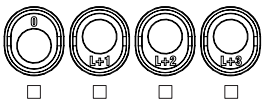

Front Lower Arm Holder Adjustment □ 0.5mm □ 1mm

Ride Highe: _____ mm



Oil: _____

Spacer: _____ mm

Pistons: _____

Spring: _____

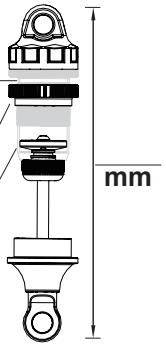

Rear Suspension

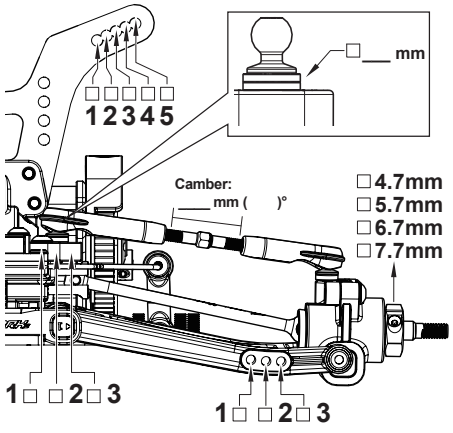

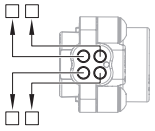

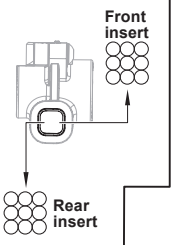

Wing Angle □0 □+3 □-3

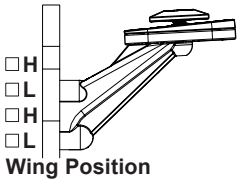

Wing Position

Notes: _____

_____

_____

Rear Sway bar □Use _____ mm

□None

Body: _____

Rear Wing: _____

Front Wing: _____

Ride Highe: _____ mm

Rear Toe-In

F

□0.5 □1.0

R

□0.5 □1.0

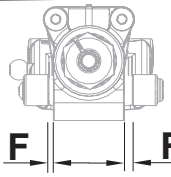

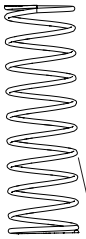

Oil: _____

Spacer: _____ mm

Pistons: _____

Spring: _____

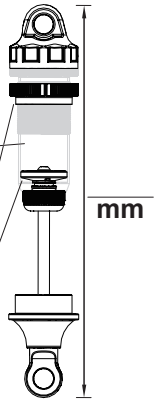

Option Parts List

Front lower arm

□Carbon composite Hard Material □Standard Material

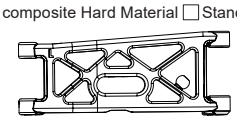

Rear lower arm

□Carbon composite Hard Material □Standard Material

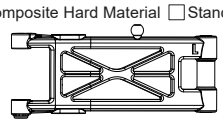

Side guard

□Carbon composite Hard Material □Standard Material



Parts No. List

Part No.	Part Name	Q`ty in Use	Item No.
2502402	S12-1 Diff Case Set	1	SW-2502402
2501807	SWORKz Shock Spring Holder with Ball End Plastic Parts	2	SW-2501807
2503210A	SWORKz 1/10 Eccentric Busshing Set	2	SW-2503210A
220031-81	S14-3 Precision Plastic Center Spur Gear 81T for Slipper Clutch	1	SW-220031-81
220034	S12-2 Front C Hub Set in Pro-composite Hard Material	1	SW-220034
220035A	S12-2 Front Durable Lower Arm Set in Pro-composite Material (Standard)	1	SW-220035A
220036	S12-2 Rear Lower Arm Set in Pro-composite Material (Standard)	1	SW-220036
220037	S12-2 Side Guard Set in Pro-composite Material (Standard)	1	SW-220037
220038	S12-2 Front & Rear Hub Carry Set	2	SW-220038
220039A	S12-2 Front Arm Holder Plastic Parts (Durable)	1	SW-220039A
220040	S12-2 Servo Savor and Rear Gear Box Parts	1	SW-220040
220041-MF	S12-2 Series Middle Front Motor Position Gear Box	1	SW-220041-MF
220041-3C	S12-2 Gear Box Gen 3 Cover	1	SW-220041-3C
220042	S12-2 Sway Bar Plastic Parts	1	SW-220042
220043	S12-2 Battery Holder Set	1	SW-220043
220044	S12-2 Rear Wing Mount Set	1	SW-220044
220045	S12-2 Gear Box Inserts	1	SW-220045
220046	S12-2 Rear Hub Insert Set	1	SW-220046
220047	S12-2 Front C-Hub Insert& Sway Bar Ball End Parts	1	SW-220047
220049-1	SWORKz 1/10 Precision Plastic Shock Piston(1.6X2Holes)	2	SW-220049-1
220049-2	SWORKz 1/10 Precision Plastic Shock Piston(1.7X2Holes)	2	SW-220049-2
220049-5	SWORKz 1/10 Precision Plastic Shock Seal Part (2 Sets)	2	SW-220049-5
220050-1	SWORKz 1/10 Precision Plastic Shock Cap	4	SW-220050
220050-2	SWORKz 1/10 Precision Plastic Shock Seal Cap	4	SW-220050
224007L3	SWORKz 1/10 Plastic Ball End Set (T3.0mm)	4	SW-224007L3
224007S2-25	SWORKz 1/10 2WD Savor Servo Arm (25T)	1	SW-224007S2-25
224007S2-23	SWORKz 1/10 2WD Savor Servo Arm(23T)	1	SW-224007S2-23
222001	S12-2 Plastic Synthesis Rear Hub (R=L)	2	SW-222001
224010	SWORKz 1/10 Series Shock Plastic Parts	4	SW-224010
250042	SWORKz 1/10 sonic wing 6.5"	1	SW-250042
252002-65	SWORKz 1/10 sonic front lexan wing "65mm"	1	SW-250045
252001	S12-2 Eaglet Style 2.0 Clean Body Sheel	1	SW-252001
212001	S12-2 Rear CVD Drive Shaft Set 62mm	2	SW-212001
330134	Shock Ball Stud	4	SW-330134
330156	Adjuster Knob	2	SW-330156
330277	S104 Diff. Bevel Gear 18T	2	SW-330278
330278	S104 Diff. Bevel Gear 10T	4	SW-330278
330279	S104 Bevel Gear Shaft	2	SW-330279
330283	S104 Pin M2.0x9.8mm	4	SW-330283
330295	S104 CVD Join	2	SW-330295
330300	S104 Rear Upper Sus. Arm Turnbuckles	4	SW-330300
330304A	S104 Aluminum Shock Spring Adjust Nut (BK)	4	SW-330304A
330315	Sway Bar Linkage Ball Stud	4	SW-330315
330321	S104 Center Slipper Clutch Pin M2.0x8mm	1	SW-330321
330331	S104 Steering Linkage 5mm Ball Stud (L4.1mm)	1	SW-330331
330410	Motor Gear 21T	1	SW-330410
330516	S12 Idler Gear Shaft 5X15L	1	SW-330516
330525	S12 Rear Lower Arm Hinge Pin (3X44mm)	2	SW-330525
330536	S12 Pin (3X26mm)	2	SW-330536
330537	S12 Arm Hinge Pin (3X34mm)	2	SW-330537
330541	S12 Gear Diff Outdrive	2	SW-330541
330544	S12 Shock Seal Cover (SP)	4	SW-330544
330643	S104 EVO Steering Linkage 5mm Ball Stud (L7mm)	1	SW-330643
332002	S12-2 Aluminum Idler Gear 20T	1	SW-332002
332005A	S12-2 Slipper Clutch Adjust Screw 2.4x65mm	1	SW-332005A
332006	S12-2 Aluminum Motor Plate	1	SW-332006
332007A	S12-2 Series Lightened Rear Lower Arm Holder (RF)	1	SW-332007A
332008A	S12-2 Series Rear Lower Arm Plate (RR)	1	SW-332008A
332010	S12-2 CVD Axil	2	SW-332010
332011	S12-2 CVD Axil Holder	2	SW-332011
332012	S12-2 Rear Drive Shaft (62mm)	2	SW-332012
332013	S12-2 Aluminum Servo Savor Post	2	SW-332013
332014	S12-2 Aluminum Steering Hub Axil (L&R)	2	SW-332014
332015	S12-2 Aluminum Front Lower Arm Holder	1	SW-332015
332032	S12-2 High Torque Aluminum Slipper Clutch Pad (Outside)	1	SW-332032
332033	S12-2 High Torque Aluminum Slipper Clutch Pad (Inside)	1	SW-332033
332034	S12-2 Steel Slipper Clutch Spring Holder Washer	2	SW-332034
332038-SF	SWORKz 1/10 Series Pro Shock System Shorter Front Shaft (SF-41.2mm)	2	SW-332038-SF
332038-SR	SWORKz 1/10 Series Pro Shock System Shorter Rear Shaft (SR-48.2mm)	2	SW-332038-SR
332039-SF	SWORKz 1/10 Series Pro Shock Body for Shorter Front System(SF)	2	SW-332039-SF
332039-SR	SWORKz 1/10 Series Pro Shock Body for Shorter Rear System (SR)	2	SW-332039-SR
332042-25	S12-2C/D Full Edition Main Chassis 2.5mm	1	SW-332042-25
332055	SWORKz 1/10 Series Linkage Turnbuckle M3X45mm	2	SW-332055
334002	S14-3 Aluminum Shock Stud	4	SW-334002
334011	S14-3 12mm Wheel Hex (5.7mm)	2	SW-334011

Part No.	Part Name	Q`ty in Use	Item No.
334020	S14-3 Series C Hub Bushing (A)(2.5)	2	SW-334020
334021	S14-3 Series C Hub Bushing (B)(0.7)	2	SW-334021
334022A	SWORKz 1/10 Hinge Pin (3x32mm)	2	SW-334022A
334060-7	SWORKz 1/10 Linkage Ball Stud (D5.5mm x L7mm)	10	SW-334060-7
334060-4	SWORKz 1/10 Linkage Ball Stud (D5.5mm x L4mm)	2	SW-334060-4
342001	S12-2 Pro-composite Rear Carbon Fiber Shock Tower	1	SW-342001
342002	S12-2 Pro-composite Front Carbon Fiber Shock Tower	1	SW-342002
342003	S12-2 Steering Carbon Plate	2	SW-342003
354003-36	S12 Series POM MFR Idler Gear 36T	1	SW-354003-36
400002	O-ring S5	2	SW-400002
400014	S104 Aluminum Shock Spring Adjust Nut O-Ring 1.5x13.5mm	4	SW-400014
400025	SWORKz 1/10 Series Pro Shock System Seal O-ring	8	SW-400025
410047	SWORKz Shock Cap O-Ring (SP)	4	SW-410047
410049	1/10 Shock Seal Cap O-ring (8*10*1)	4	SW-410049
610024	S12-2 Battery Block	2	SW-610024
610013B08	S14/S12 Slipper Clutch Teflon Pad(Low Grip)(Yellow)(8mm)	2	SW-610013B08
610017P	S12 Series Diff. Paper Gasket (0.4T)	1	SW-610017P
512001	S12-2 Eaglet ST-2 Body Shell Decal Sheet	1	SW-252001
512002	S12-2 Eaglet ST-2 Body Shell Window Mask	1	SW-252001
510091	SWORKz Origional Logo Sticker	1	SW-510091
115161	S14/S12 Black Competition Rear Shock Spring (L3-Dot)(57X1.1X8.0)	2	SW-115161
115185	S12-2 Black Competition Front Shock Spring (US4-Dot)(38X1.2X6.0)	2	SW-115185
115172	S12-2 Front Sway Bar 1.0mm	1	SW-115172
115177	S12-2 Rear Sway Bar 1.3mm	1	SW-115177
115188	SWORKz 1/10 Slipper Clutch Spring (D1.4x12mm)	1	SW-115188
115189	SWORKz 1/10 Slipper Clutch Spring (D1.6x12mm)	1	SW-115189
116010R	Ball Bearing 5x10x4mm (Red Rubber Case)	10	SW-116010R
116013R	Ball Bearing 10x15x4mm (Red Rubber Case)	2	SW-116013R
116015	Ball Bearing 5x8x2.5mm	4	SW-116015
116019R	Ball Bearing 5x13x4mm (Red Rubber Case)	2	SW-116019R
117003	Flange Ball Bearing 3x6x2.5mm	2	SW-117003
101020A	3mm Countersunk Washers (RD)	6	SW-101020A
101007	Washer 3x8x0.5	2	SW-101007
101011	M2.6x6xT0.5mm	4	SW-101011
101012	M3x6xT0.5mm	6	SW-101012
101023	S104 Shim 10x12x0.1mm	1	SW-101023
101024	S104 Shim 10x12x0.2mm	1	SW-101024
101025	Shim 3.5x10x0.1mm	4	SW-101025
101026	SWORKz Aluminum Washer 3X6X1.5mm	11	SW-101026
103001	M3 Nut Lock	3	SW-103001
103002	Flage Nylon Nut M4	4	SW-103002
103007	M3mm Nut Lock Thim (BK)	2	SW-103007
104002	Set Screw M3x10	2	SW-104002
104004	M3x3mm Set Screw	13	SW-104004
104005	Set Screw M3x4	2	SW-104005
104009	M3x16mm Set Screw	2	SW-104009
104012	M3x12mm Set Screw	1	SW-104012
105021	M3x6mm Conical Head Screw	4	SW-105021
106001	M3x8mm Hex Soket OH/TP Screw	13	SW-106001
106002	M3x10mm Hex Soket OH/TP Screw	26	SW-106002
106003	Button Head Screw M3x16mm	1	SW-106003
106005	M3x15mm Hex Soket OH/TP Screw	2	SW-106005
106008	M3x12mm Hex Soket OH/TP Screw	7	SW-106008
106009	M3x25mm Hex Soket OH/TP Screw	2	SW-106009
106010	M3x6mm Hex Soket OH/TP Screw	4	SW-106010
106014	M2x6mm Hex Soket OH/TP Screw	14	SW-106014
106015	M3x5mm Hex Soket OH/TP Screw	2	SW-106015
106017	M3x14mm Hex Soket OH/TP Screw	4	SW-106017
106020	M2.5x5mm 1.5mmHex Soket OH/ST Screw	6	SW-106020
108001	M3x12mm FH/ST HEX Screw	6	SW-108001
108003	M3x10mm FH/ST HEX Screw	18	SW-108003
108005	M3x14mm FH/ST HEX Screw	2	SW-108005
108006	M3x8mm FH/ST HEX Screw	26	SW-108006
108007	M3x6mm FH/ST HEX Screw	2	SW-108007
108014	M3x4mm FH/ST HEX Screw	1	SW-108014
108028	M2.6x4mm Flat Head Screw - Hex Socket	4	SW-108028
108029	M2.0x4.6mm FH/ST HEX Screw (1.5mm HexHead)	4	SW-108029
200193	Antenna Tube	1	SW-200193
420010	Antenna Cup	1	SW-200193

Spare Part List

Item No.	Part Name
SW-2502402	S12-1 Diff Case Set
SW-2501807	SWORKz Shock Spring Holder with Ball End Plastic Parts
SW-2502403-01	S12-1 Idler Gear 52T
SW-2503210A	SWORKz 1/10 Eccentric Busshing Set
SW-220031-81	S14-3 Precision Plastic Center Spur Gear 81T for Slipper Clutch
SW-220034	S12-2 Front C Hub Set in Pro-composite Hard Material
SW-220035A	S12-2 Front Durable Lower Arm Set in Pro-composite Material (Standard)
SW-220036	S12-2 Rear Lower Arm Set in Pro-composite Material (Standard)
SW-220037	S12-2 Side Guard Set in Pro-composite Material (Standard)
SW-220038	S12-2 Front & Rear Hub Carry Set
SW-220039A	S12-2 Front Arm Holder Plastic Parts (Durable)
SW-220040	S12-2 Servo Savor and Rear Gear Box Parts
SW-220041-MF	S12-2 Series Middle Front Motor Position Gear Box
SW-220041C-3	S12-2 Middle Front Motor Gear Box Gen 3 Cover
SW-220042	S12-2 Sway Bar Plastic Parts
SW-220043	S12-2 Battery Holder Set
SW-220044	S12-2 Rear Wing Mount Set
SW-220045	S12-2 Gear Box Inserts
SW-220046	S12-2 Rear Hub Insert Set
SW-220047	S12-2 Front C-Hub Insert& Sway Bar Ball End Parts
SW-220049-1	SWORKz 1/10 Precision Plastic Shock Piston(1.6X2Holes)
SW-220049-2	SWORKz 1/10 Precision Plastic Shock Piston(1.7X2Holes)
SW-220049-5	SWORKz 1/10 Precision Plastic Shock Seal Part (2 Sets)
SW-220050	SWORKz 1/10 Pro-Shock Precision Plastic Shock Cap & Seal Cap (4 Sets)
SW-222001	S12-2 Plastic Synthesis Rear Hub (R=L)(1Set)
SW-224007S2-25	SWORKz 1/10 2WD Savor Servo Arm (25T)
SW-224007S2-23	SWORKz 1/10 2WD Savor Servo Arm(23T)
SW-224007L3	SWORKz 1/10 Plastic Ball End Set (T3.0mm) (2 Sets)
SW-224010	SWORKz 1/10 Series Shock Plastic Parts (2 Sets)
SW-250042	SWORKz 1/10 sonic wing 6.5"
SW-250045	SWORKz 1/10 sonic front lexan wing "65mm"
SW-252001	S12-2 Eaglet Style 2.0 Clean Body Sheel
SW-212001	S12-2 Rear CVD Drive Shaft Set 62mm
SW-330134	Shock Ball Stud
SW-330156	SWORKz Adjuster Knob (GM)(2PC)
SW-330278	S104 Diff. Bevel Gear Set
SW-330279	S104 Bevel Gear Shaft
SW-330283	S104 Pin M2.0x9.8mm
SW-330295	S104 CVD Join Set (2 Sets)
SW-330300	S104 Rear Upper Sus. Arm Turnbuckles (2pcs)
SW-330304A	S104 Aluminum Shock Spring Adjust Nut (BK)
SW-330315	S104 Sway Bar Linkage Ball Stud (4pcs)
SW-330321	S104 Center Slipper Clutch Pin M2.0x8mm (2pc)
SW-330331	S104 Steering Linkage Ball Stud 5x4.1mm (2pcs)
SW-330410	SWORKz 1/10 Motor Pinion Gear 21T
SW-330516	S12-1 Idler Gear Shaft 5X15L
SW-330525	S12 Rear Lower Arm Hinge Pin (3X44mm)
SW-330536	S12 Pin (3X26mm)
SW-330537	S12 Arm Hinge Pin (3X34mm)
SW-330541	S12 Gear Diff Outdrive
SW-330643	S104 EVO Steering Linkage 5mm Ball Stud (L7mm)(4PC)
SW-332002	S12-2 Aluminum Idler Gear 20T
SW-332005A	S12-2 Slipper Clutch Adjust Screw 2.4x65mm
SW-332006	S12-2 Aluminum Motor Plate
SW-332007A	S12-2 Series Lightened Rear Lower Arm Holder (RF)
SW-332008A	S12-2 Series Rear Lower Arm Plate (RR)
SW-332010	S12-2 CVD Axil (2PC)
SW-332011	S12-2 CVD Axil Holder (2PC)
SW-332012	S12-2 Rear Drive Shaft (62mm)(2PC)
SW-332013	S12-2 Aluminum Servo Savor Post (2PC)
SW-332014	S12-2 Aluminum Steering Hub Axil (L&R)(2PC)
SW-332015	S12-2 Aluminum Front Lower Arm Holder
SW-332032	S12-2 High Torque Aluminum Slipper Clutch Pad (Outside)
SW-332033	S12-2 High Torque Aluminum Slipper Clutch Pad (Inside)
SW-332034	S12-2 Steel Slipper Clutch Spring Holder Washer (2PC)
SW-332038-SF	SWORKz 1/10 Series Pro Shock System Shorter Front Shaft (SF-41.2mm)
SW-332038-SR	SWORKz 1/10 Series Pro Shock System Shorter Rear Shaft (SR-48.2mm)
SW-332039-SF	SWORKz 1/10 Series Pro Shock Body for Shorter Front System (SF)
SW-332039-SR	SWORKz 1/10 Series Pro Shock Body for Shorter Rear System (SR)
SW-332042-25	S12-2C/D Full Edition Main Chassis 2.5mm
SW-332055	SWORKz 1/10 Series Linkage Turnbuckle M3X45mm (2PC)
SW-334002	S14-3 Aluminum Shock Stud (2PC)
SW-334011	S14-3 12mm Wheel Hex (5.7mm)(Option)(2PC)
SW-334020	S14-3 Series C Hub Bushing (A)(2.5)(2PC)
SW-334021	S14-3 Series C Hub Bushing (B)(0.7)(2PC)

Item No.	Part Name
SW-334022A	SWORKz 1/10 3x32mm Hinge Pin(2PC)
SW-342004	S12-2 Pro-composite Front Carbon Fiber Shock Tower (Higher)
SW-342005	S12-2 Pro-composite Rear Carbon Fiber Shock Tower (Higher)
SW-342003	S12-2 Steering Carbon Plate (1PC)
SW-334060-7	SWORKz 1/10 Linkage Ball Stud D5.5mm x L7mm)(4PC)
SW-334060-4	SWORKz 1/10 Linkage Ball Stud D5.5mm x L4mm)(2PC)
SW-354003-36	S12 Series POM MFR Idler Gear 36T
SW-400002	O-ring S5 4.8x1.5 (6pcs)
SW-400014	S104 Aluminum Shock Spring Adjust Nut O-Ring 1.5x13.5mm
SW-400025	SWORKz 1/10 Series Pro Shock System Seal O-ring
SW-410047	S104 EVO/S12-1 Shock Cap O-Ring (SP)
SW-410049	1/10 Shock Seal Cap O-ring (8*10*1)
SW-610017	S102 Diff. Gasket (16X24X0.4t)
SW-610024	S12-2 Battery Block
SW-610013B08	S14/S12 Slipper Clutch Teflon Pad(Low Grip)(Yellow)(8mm)
SW-252001	S12-2 Eaglet ST-2 Clean Body Shell Set
SW-510091	SWORKz Origional Logo Sticker (2PC)
SW-115089	S12 Series Ball Diff. Adjust Spring
SWC-115161	S14/S12 Black Competition Rear Shock Spring (L3-Dot)(57X1.1X8.0)
SWC-115185	S12-2 Black Competition Front Shock Spring (US4-Dot)(38X1.2X6.0)
SW-115172	S12-2 Front Sway Bar 1.0mm
SW-115177	S12-2 Rear Sway Bar 1.3mm
SW-115188	SWORKz 1/10 Slipper Clutch Spring (D1.4x12mm)
SW-115189	SWORKz 1/10 Slipper Clutch Spring (D1.6x12mm)
SW-116010R	Ball Bearing 5x10x4mm (Red Rubber Case)(4PC)
SW-116013R	Ball Bearing 10x15x4mm (Red Rubber Case)(6PC)
SW-116015	Ball Bearing 5x8x2.5mm
SW-116019R	Ball Bearing 5x13x4mm (Red Rubber Case)(4PC)
SW-117003	Flange Ball Bearing 3x6x2.5mm (2pcs)
SW-101020A	3mm Countersunk Washers (RD)
SW-101007	Washer 3x8x0.5
SW-101011	M2.6x6xT0.5mm
SW-101012	M3x6xT0.5mm
SW-101023	S104 Shim 10x12x0.1mm
SW-101024	S104 Shim 10x12x0.2mm
SW-101025	Shim 3.5x10x0.1mm
SW-101026	SWORKz Aluminum Washer 3X6X1.5mm
SW-103001	M3 Nut Lock
SW-103002	Flage Nylon Nut M4
SW-103007	M3 Nut Lock Thim Type (BK)(10PC)
SW-104002	Set Screw M3x10
SW-104004	M3x3mm Set Screw (10pcs)
SW-104005	M3x4mm Set Screw (10pcs)
SW-104009	M3x16mm Set Screw (10pc)
SW-104012	M3x12mm Set Screw (10pcs)
SW-105021	M3x6mm Conical Head Screw (10PC)
SW-106001	M3x8mm Hex Soket OH/TP Screw (10pcs)
SW-106002	M3x10mm Hex Soket OH/TP Screw (10pcs)
SW-106003	M3x16mm Hex Soket OH/TP Screw (10pcs)
SW-106005	M3x15mm Hex Soket OH/TP Screw
SW-106008	M3x12mm Hex Soket OH/TP Screw (10pcs)
SW-106009	M3x25mm Hex Soket OH/TP Screw (10pcs)
SW-106010	M3x6mm Hex Soket OH/TP Screw (10pcs)
SW-106014	M2x6mm Hex Soket OH/TP Screw (10pcs)
SW-106015	M3x5mm Hex Soket OH/TP Screw (10pcs)
SW-106017	M3x14mm Hex Soket OH/TP Screw (10PC)
SW-106020	M2.5x5mm 1.5mmHex Soket OH/ST Screw
SW-108001	M3x12mm FH/ST HEX Screw (10pcs)
SW-108003	M3x10mm FH/ST HEX Screw (10pcs)
SW-108005	M3x14mm FH/ST HEX Screw (10pcs)
SW-108006	M3x8mm FH/ST HEX Screw (10pcs)
SW-108007	M3x6mm FH/ST HEX Screw (10pcs)
SW-108014	M3x3mm FH/ST HEX Screw (10pcs)
SW-108028	M2.6x4mm Flat Head Screw - Hex Socket (10PC)
SW-108029	M2.0x4.6mm FH/ST HEX Screw (1.5mm Hex)(10PC)
SW-200193	Antenna Tube (3 sets)

Option Part List

Item No.	Part Name
SW-212002	S12 Series Ball Differential Unite
SW-210072	S12-1 Series Gear Diff Set
SW-212007-SF	SWORKz 1/10 Series Pro-Shock System Shorter Travel Front Set
SW-212007-SR	SWORKz 1/10 Series Pro-Shock System Shorter Travel Rear Set
SW-212008-LF	SWORKz 1/10 Series Pro-Shock System Longer Travel Front Set
SW-212008-LR	SWORKz 1/10 Series Pro-Shock System Longer Travel Rear Set
SW-220025WH	SWORKz 1/10 2WD Off Road Competition Front Dish Wheel (WH) (4PC)
SW-220025FY	SWORKz 1/10 2WD Off Road Competition Front Dish Wheel (FY) (4PC)
SW-220026WH	SWORKz 1/10 2/4WD Off Road Competition Rear Dish Wheel (WH) (4PC)
SW-220026FY	SWORKz 1/10 2/4WD Off Road Competition Rear Dish Wheel (FY) (4PC)
SW-220031-72	S14-3 Precision Plastic Center Spur Gear 72T for Slipper Clutch
SW-220031-78	S14-3 Precision Plastic Center Spur Gear 78T for Slipper Clutch
SW-220035H	S12-2 Front Lower Arm Set in Pro-composite Hard Material
SW-220036H	S12-2 Rear Lower Arm Set in Pro-composite Hard Material
SW-220037H	S12-2 Side Guard Set in Pro-composite Hard Material
SW-220049-3	SWORKz 1/10 Pro-Shock Precision Plastic Shock Piston(1.6X3Holes)(2PC)
SW-220049-4	SWORKz 1/10 Pro-Shock Precision Plastic Shock Piston(1.8X2Holes)(2PC)
SW-250042	SWORKz 1/10 sonic lexan wing 6.5"
SW-250042-1	SWORKz 1/10 Sonic Lexan Wing 6.5" (Harder)(1PC)
SW-250042BK	SWORKz 1/10 sonic lexan wing 6.5" (BK)
SW-250042WH	SWORKz 1/10 sonic lexan wing 6.5" (WH)
SW-2501800ABK	S104 Rear Wing Set (W/O Holes) (BK)
SW-2501800AFY	S104 Rear Wing Set (W/O Holes) (FY)
SW-2501800AWH	S104 Rear Wing Set (W/O Holes) (WH)
SW-252001L	S12-2 Eaglet ST-2 Clean Body Shell (Light)
SW-330324	SWORKz 1/10 Motor Pinion Gear 20T
SW-330335	S104 Aluminum Rear Wing Washer
SW-330409	SWORKz 1/10 Motor Pinion Gear 19T
SW-330411	SWORKz 1/10 Motor Pinion Gear 22T
SW-330412	SWORKz 1/10 Motor Pinion Gear 23T
SW-330544	S104EVO/S12 Shock Seal Cover (GM)
SW-330689	S12-1M/R Aluminum Diff Case Cover
SW-330690	S12-1M/R Aluminum Savor Servo Arm (25T)
SW-330692	S12-1M/R Aluminum Savor Servo Arm (23T)
SW-332009	S12-2 Brass Front Lower Arm Balance Holder (25g)
SW-332028	S12-2 Aluminum Front Upper Arm Holder
SW-332029	S12-2 Aluminum Rear Upper Linkage Mount
SW-332040	S12-2 Aluminum Synthesis Rear Hub (1PC)(R=L)
SW-332041	S12-2 Aluminum Synthesis Rear Hub Linkage Plate (1PC)(R=L)
SW-332040-41	S12-2 Aluminum Synthesis Rear Hub Set (2 Sets)
SW-332044	S12-2 Aluminum Gear Box Support Mount
SW-332045	S12-2 Aluminum Servo Savor Arms (2PC)
SW-332046	S12-2 Aluminum Servo Savor Steering Plate
SW-332043	S12-2 T7075 Aluminum Hard Coated Intensify Chassis
SW-362001	S12-2 15g Brass Rear Lower Arm Holder (RF)
SW-334010	S14-3 12mm Wheel Hex (4.7mm)(Standard)(2PC)
SW-334038	S14-3 12mm Wheel Hex (6.7mm)(Option)(2PC)
SW-334039	S14-3 12mm Wheel Hex (7.7mm)(Option)(2PC)
SW-334047BK	SWORKz T-7075 M4 Lightened Low Profile Large-contact with Serrated Wheel Nuts (BK)(6pc)
SW-334047GM	SWORKz T-7075 M4 Lightened Low Profile Large-contact with Serrated Wheel Nuts (GM)(6pc)
SWC-115157	S14/S12 Black Competition Front Shock Spring (S4-Dot)(43X1.2X6.5)
SWC-115158	S14/S12 Black Competition Front Shock Spring (S3-Dot)(43X1.2X7.75)
SWC-115159	S14/S12 Black Competition Front Shock Spring (S2-Dot)(43X1.2X8.0)
SWC-115160	S14/S12 Black Competition Rear Shock Spring (L4-Dot)(57X1.1X7.5)
SWC-115162	S14/S12 Black Competition Rear Shock Spring (L2-Dot)(57X1.1X9.25)
SWC-115186	S12-2 Black Competition Front Shock Spring (US3-Dot)(38X1.2X7.0)
SWC-115187	S12-2 Black Competition Front Shock Spring (US2-Dot)(38X1.2X7.25)
SWC-116013A	SWORKz Competition 10x15x4mm Ball Bearing (Metal Case)(6PC)
SW-212003	S12-2 Series Front Sway Bar Kit (1.0/1.1/1.2/1.3mm)
SW-212004	S12-2 Series Rear Sway Bar Kit (1.2/1.3/1.4/1.5/1.6mm)
SW-115173	S12-2 Front Sway Bar 1.1mm
SW-115174	S12-2 Front Sway Bar 1.2mm
SW-115175	S12-2 Front Sway Bar 1.3mm
SW-115176	S12-2 Rear Sway Bar 1.2mm
SW-115178	S12-2 Rear Sway Bar 1.4mm
SW-115179	S12-2 Rear Sway Bar 1.5mm
SW-115180	S12-2 Rear Sway Bar 1.6mm
SWC-116010C	SWORKz Competition 5x10x4mm Ball Bearing(Metal Case)(6PC)
SWC-116019A	SWORKz Competition 5x13x4mm Ball Bearing (Metal Case)(4PC)

Shock Absorbers

Front

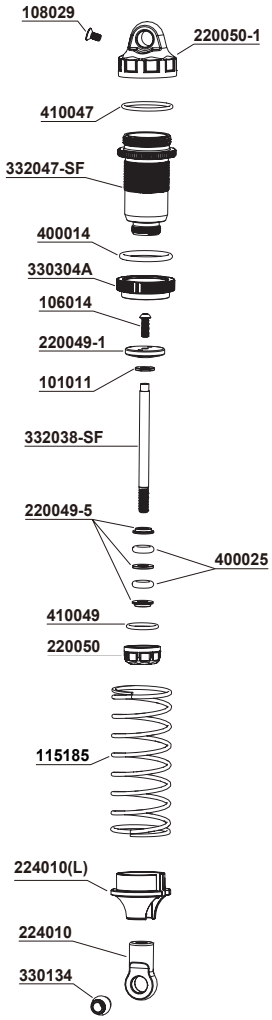

Rear

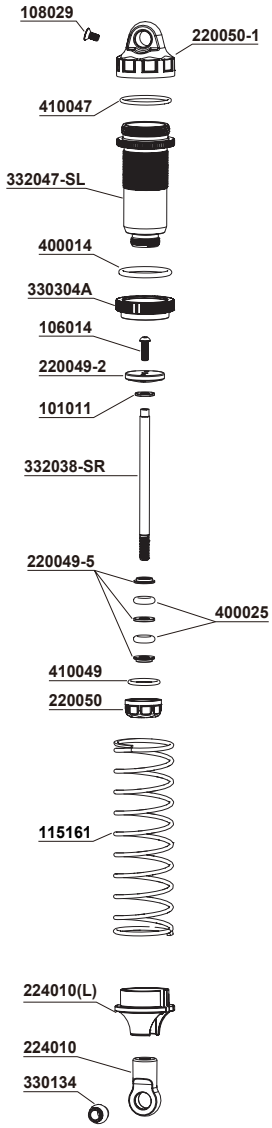

Differential

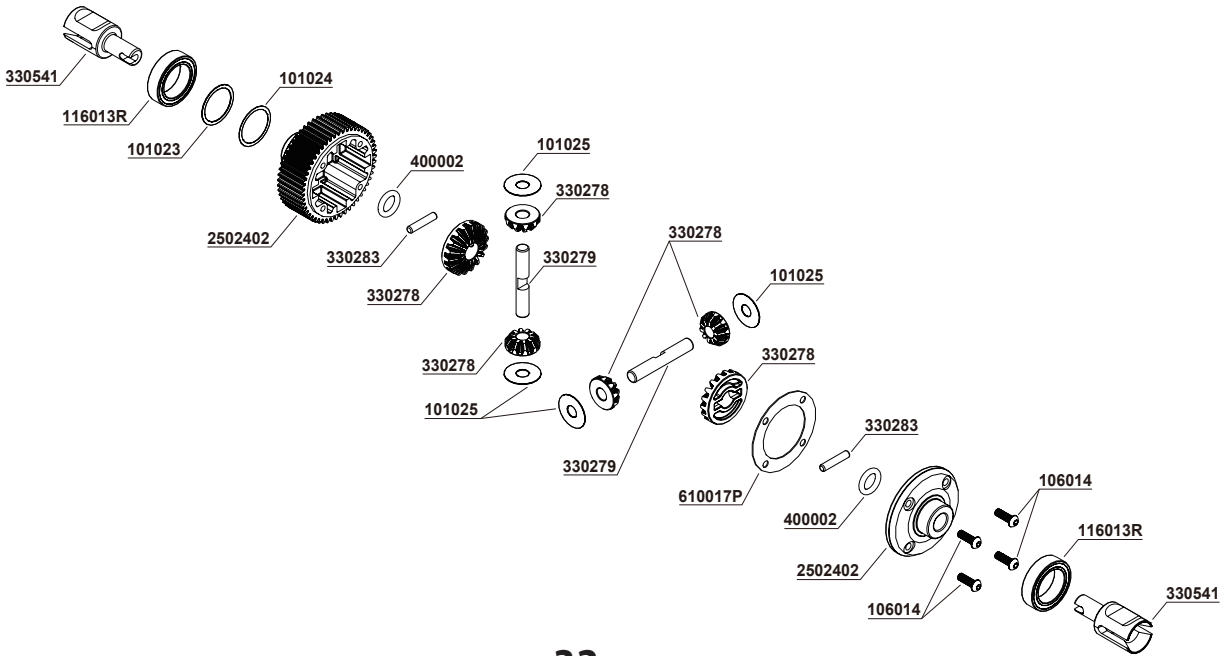

Front Suspension

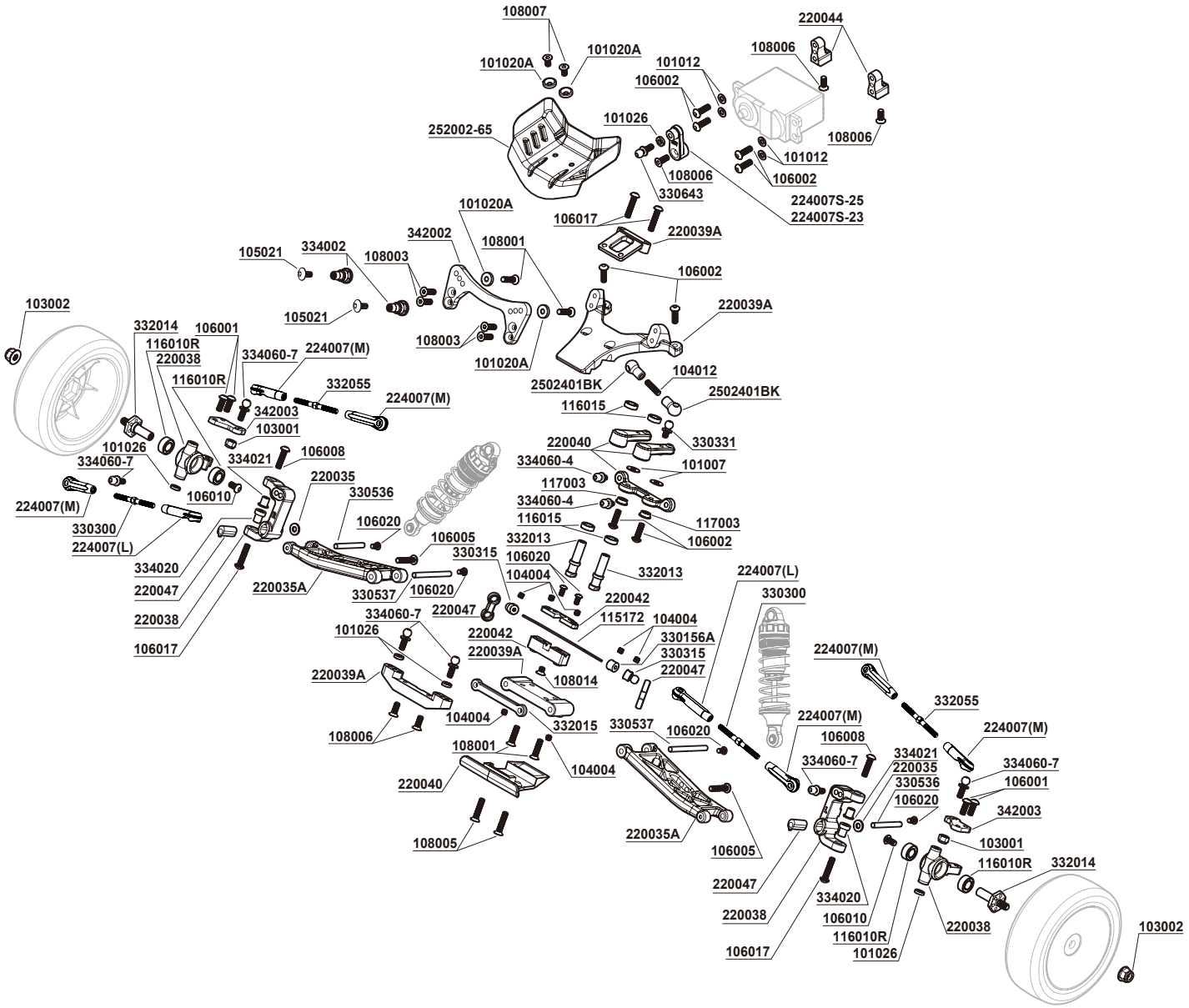

Chassis & Electronic Parts

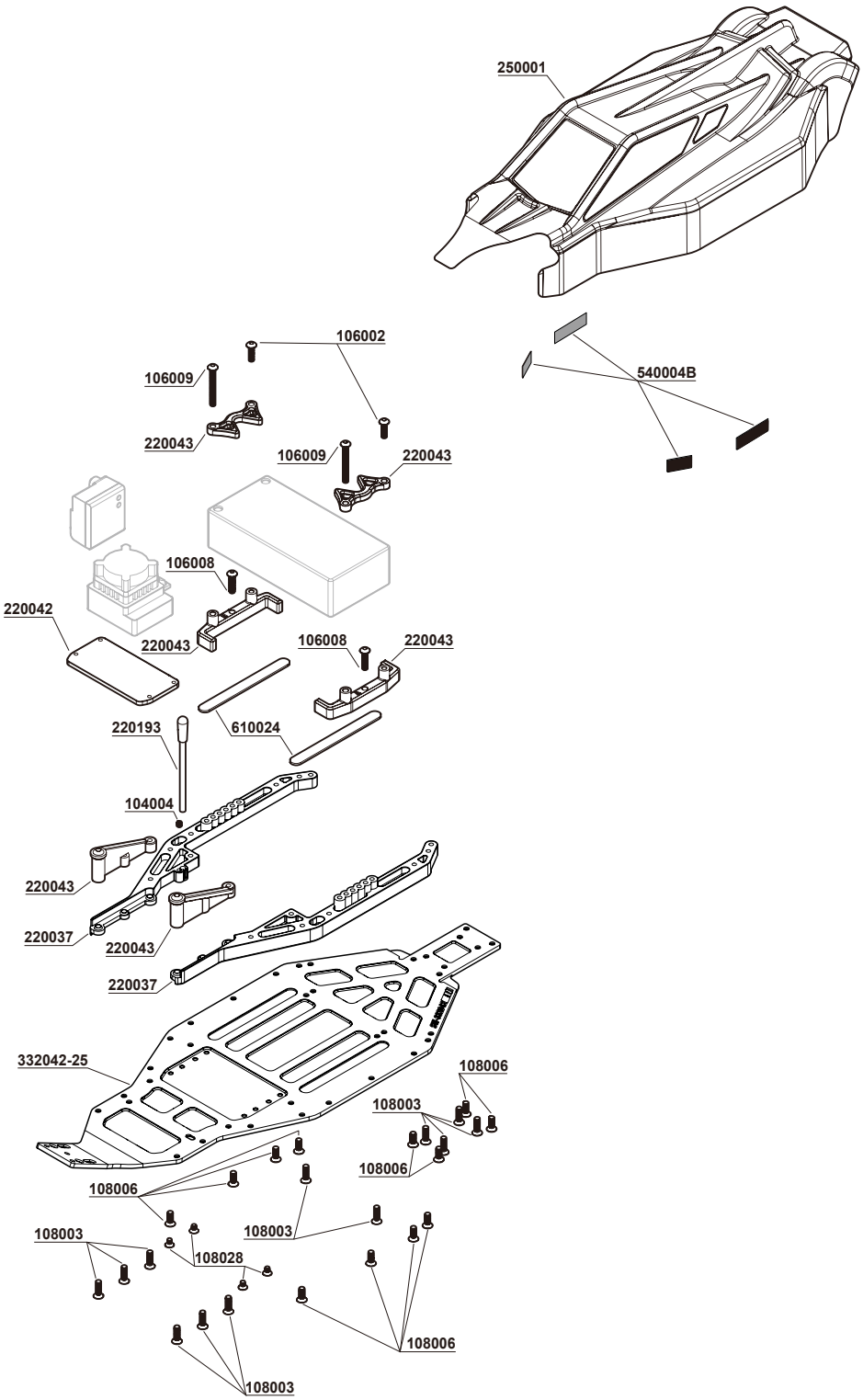

Rear Suspension

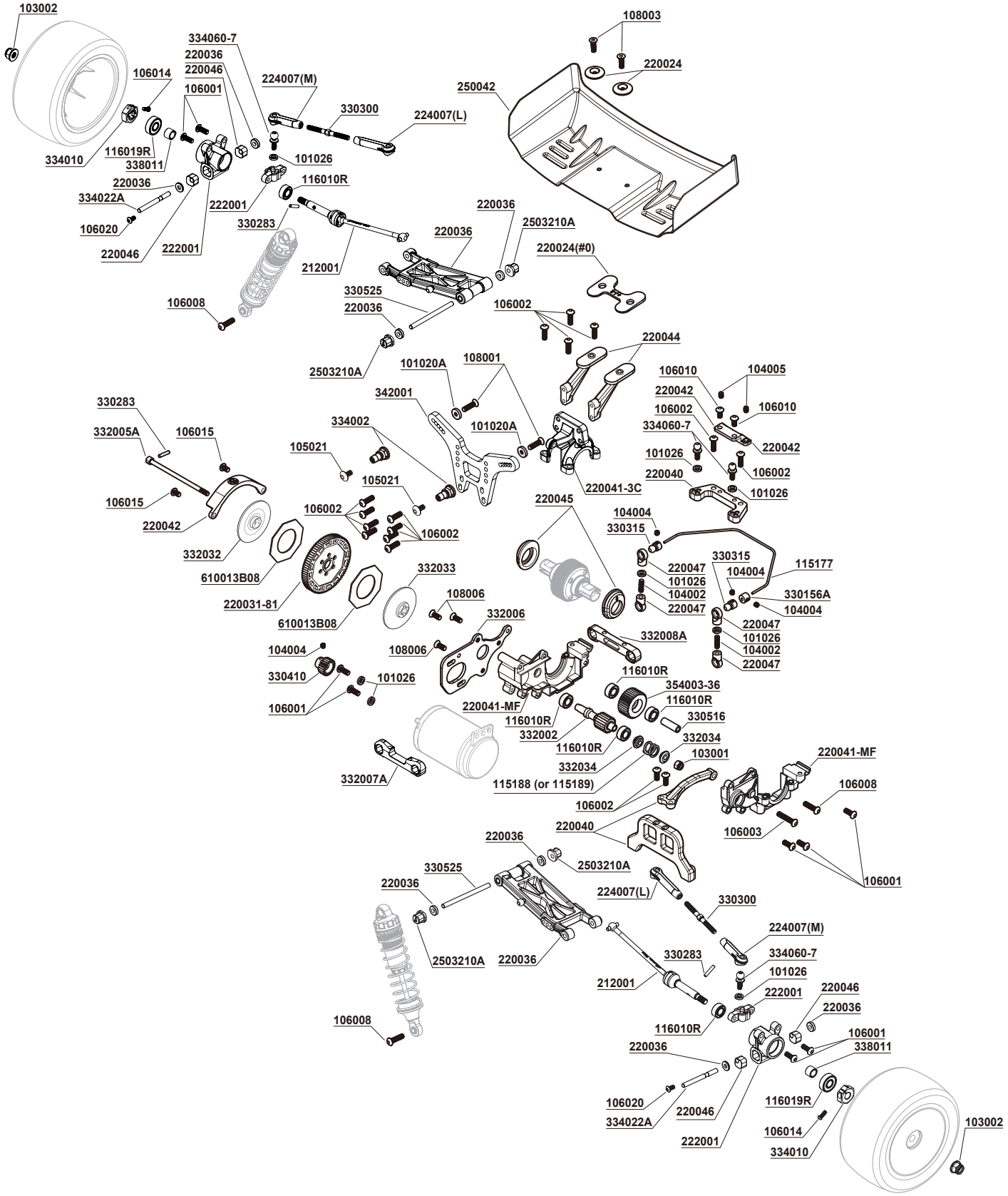

S12.2C EVO

1/10 Off Road 2WD Racing Electric Buggy



SPEEDMASTER HOBBY CO., LTD.

TEL: +886-3-538-7638

FAX: +886-3-538-7328

No.42, Ruiguang St., Xiangshan Dist.,

Hsinchu City 300, Taiwan (R.O.C.)

www.sworkz.com

502001CE

Production No. 33CE220212