S35-4E

1/8 Off Road Brushless Po y

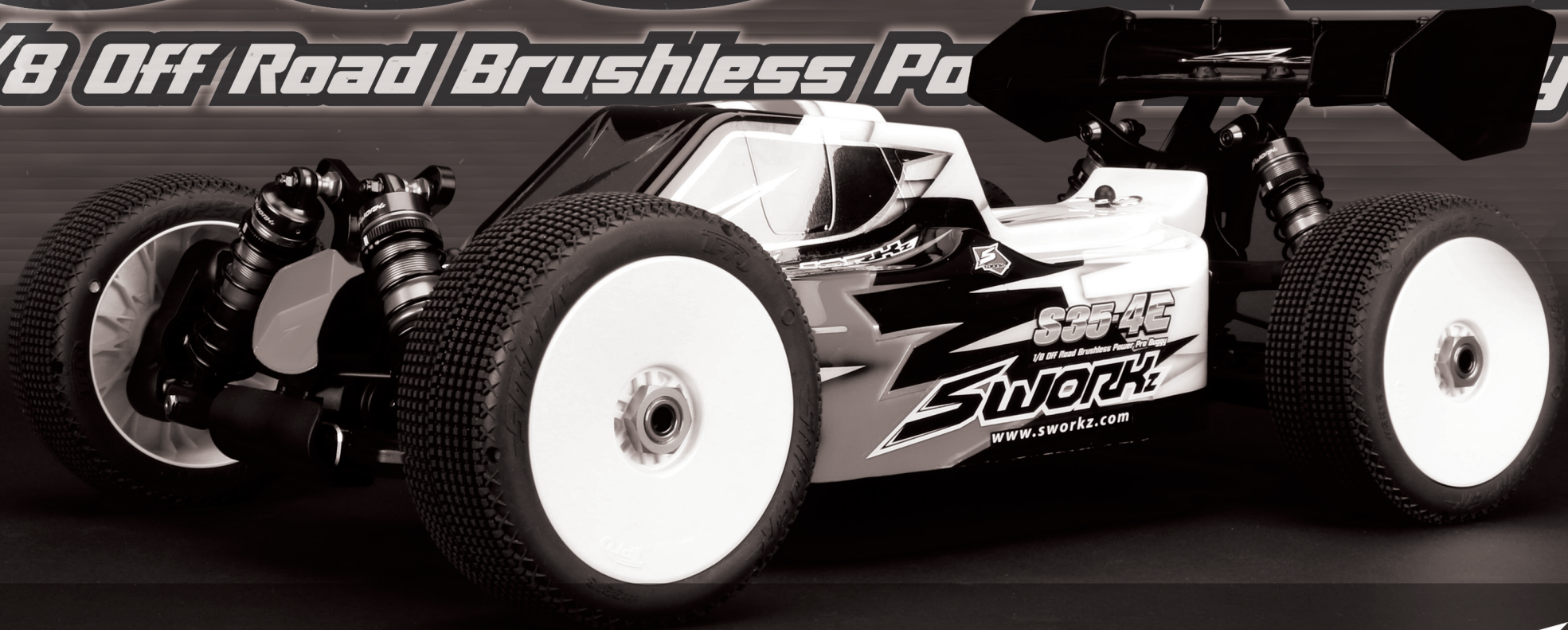

SWORKz S35-4E INSTRUCTION MANUAL

S35-4E

1/8 Off Road Brushless Power Pro Buggy

INSTRUCTION

The SWORKz S35-4E 1/8 Electric is designed for pure racing. The geometry of the car provides optimized corner speed compared with easy handling and maximum traction.

The S35-4E features a T7075 hard anodized and lightened aluminium chassis with a wide layout that was tested for a long time by our factory pilots to guarantee the best performance.

The totally new developed HET differentials are included too and provide a traction, that is not possible with old systems. We also included the new special middle brace system.

The new S35-4E comes with a lower shock layout in front and rear and the construction of the shocks is adapted to that new optimized layout. The fixed shock spring plates will make it almost impossible to lose them anymore.

The steering geometry, with new Ackerman and steering plates, gives the driver the feeling of total control over the S35-4E. The position of the steering servo is completely redesigned and optimized.

With the toe in plates, which now contain square inserts, you can adjust the geometry of your SWORKz S35-4E to fit to every track layout and track condition. Lower arms in front and rear are made of a newly developed composite material and fit exactely to the new chassis geometry. Side guards were redesigned in the same way.

With the new lightened wing support you can adjust position and angle of the wing to give your SWORKz S35-4E the perfect balance on the track. Together with the optimized new body shell, the aerodynamic system is working perfectly together.

Another new development in our SWORKz S35-4E is the totally new rear hub. Composite material combined with Carbon plates gives you the possibility for various setups. The newly developed Composite material is working perfectly together with the HET differentials to provide maximum traction.

The new designed Motor mount makes it possible to change very easily the motor or adjust the play of the gears. There many more small changes and smart ideas in your new SWORKz S35-4E, that make the car being a real winner.

We also included the new special middle brace system.

The position of the steering servo is completely redesigned and optimized.

The new designed Motor mount makes it possible to change very easily the motor or adjust the play of the gears.

The secret of a modern racing car is the possibility to adapt the setup to every track for top pilots but also have a standard setup that works on most tracks for hobby pilots.

And your SWORKz S35-4E is having these two characteristics in perfection.

The SWORKz development team focused on using materials, corresponding to the highest quality standards, when designing the car. You will find only 100% SWORKz quality in the S35-4E kit.

Congratulations on your purchase of the new SWORKz S35-4E 1/8 scale off-road racing buggy pro kit and thanks for trusting in SWORKz.

Please read this manual carefully, before you start to build and drive your SWORKz S35-4E. This manual contains step-by-step instructions to helping you completing, preparing and fine tuning your buggy for racing. Updates, setups, and product news will be posted on all SWORKz digital media.

As always, if you should ever have any questions or need help with your SWORKz products, please feel free to contact our official SWORKz dealers and distributors.

S35-4E Kit Features:

- New T7075 Hard Anodized, Lightend Aluminium Chassis
- New Wide Chassis Design
- New Easy Change Motor Mounting Plate
- New Lower Shock Towers
- New Shorter Shock Bodies
- New Shorter Shock Shafts
- New Shock Caps
- New Shorter Front Shock Springs
- New Fixed Shock Spring Holder
- New 3mm Updated Rear Shock Studs
- New Steering Servo Position
- New Ackerman Plate
- New Steering System
- New Servo Saver Aluminium Part
- New Servo Saver Fixable Nut
- New Servo Saver Plate
- New Servo Saver Post Locking Design
- New Steering Balls
- New Steering Knuckle Plates
- New Updated Toe In Plates with Square Inserts
- New Lightweight Wing Mount
- New Side Guards
- New Lower Front and Rear Arms
- New Body Posts Front and Rear
- New Composite Rear Hubs with Carbon Plates
- New Multi Adjustable Ball System for Rear Upper Arms
- New Anticlock Screws for Shocks
- New Aerodinamically Optimized Body Shell
- 3 HET Differentials Included
- Special Middle Brace System included
- Black Competition Shock Springs included
- Adjustable Wing Position
- Adjustable Wing Angle
- More Balance Weight Positions
- Stronger Downstop Area
- Optimized Composite Material
- Aluminium Parts in T7075
- New Easy Change Motor Mounting Plate (S35-4E)
- New Steering Servo Position (S35-4E)
- Special Middle Brace System included (S35-4E)

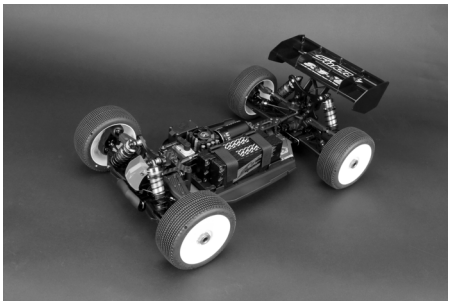

Specification	
Length:	510mm
Width:	308mm
Height:	220mm
Ground Clearance:	65mm
Wheelbase:	325-330mm
Track:	F:304mm / R:306mm
Gear Ratio:	C:46/15T, F/R:43/13T
Weight:	3650g (Race condition)

WARRANTY

Your SWORKz S35-4E kit warranty covers workmanship and manufacturing defects of the original and unmodified parts. Warranty claims resulting from crashes, abuse, improper operation, improper mounting, improper adjustment or lack of maintenance will not be honored.

Contact your local hobby shop or SWORKz distributor for all claims and questions. Claims must be well documented. All Claims are subject to expert examination approval by SWORKz.

www.sworkz.com

INTRODUCTION	2
Warranty	3
Required Equipment for Operation	5
Operation Guide	6
Assembly Steps	7-32
Set-up Sheet	33-35
S35-4E Key No. List	36-37
S35-4E Spare Part No. List	37-38
S35-4E Option Part No. List	39
Explosion view with spare parts number	40-43
End cover	44



This radio controlled racing car is not a toy!

This high-performance R/C model is recommended for ages 14 and older.

Required Equipment for Operation

Radio Gear

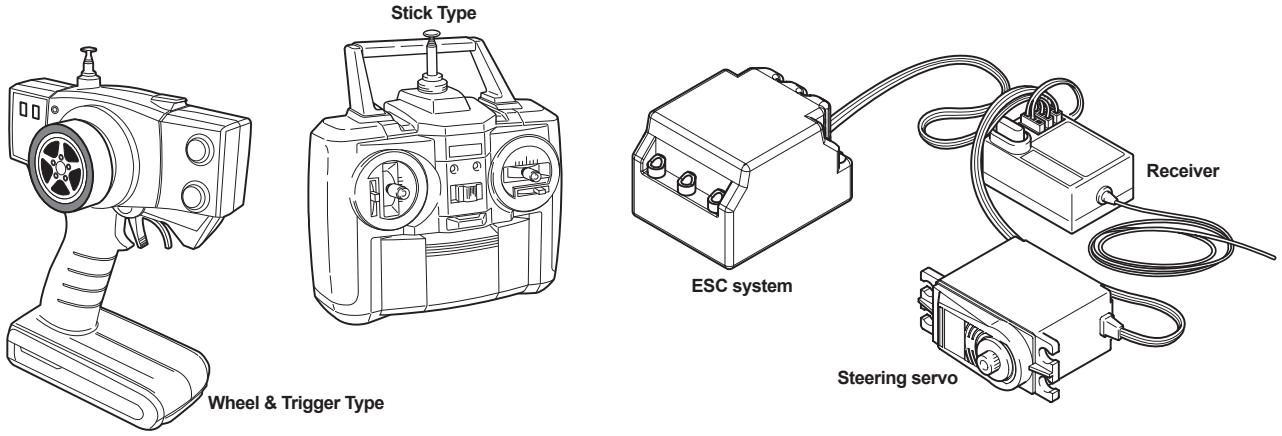

Brushless Motor

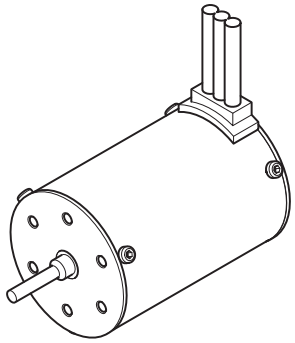

Charger and LiPo Battery

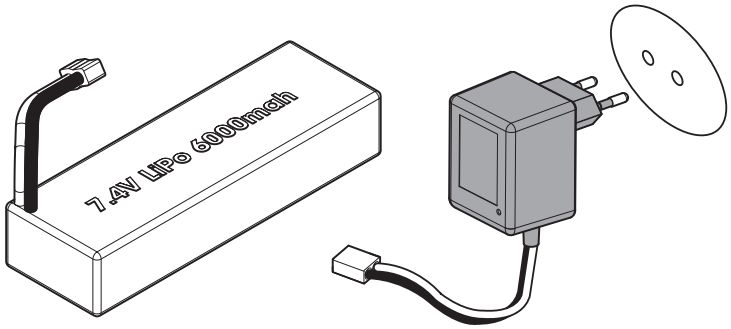

Tools Recommended

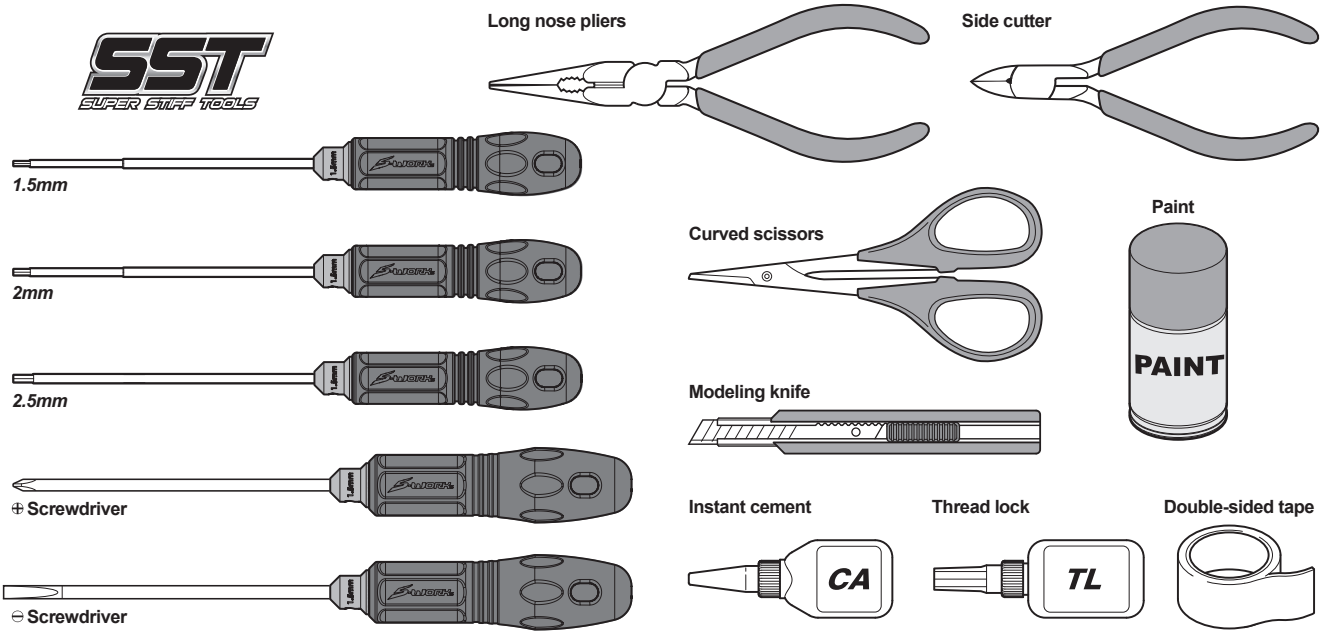

Included items

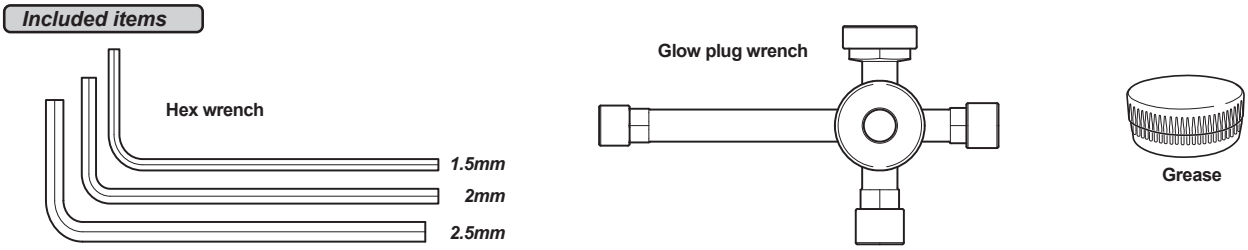

Operation Guide



Assemble front and rear

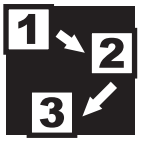

Assemble in the specified order



Assemble both left and right sides



Assemble for 2 sets



Assemble for 4 sets

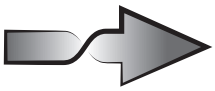

overturn



Thread Locking Compound



Grease

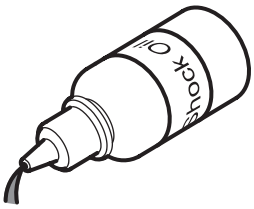

Pure Silicone Oil



Air filter oil

Safety Precautions

The SWORKz S35-4E is a high performance radio controlled model which needs to be operated with caution and common sense.
The S35-4E Pro Kit is not intended for children under the age of 14 without adult supervision. SWORKz shall not be held liable for any loss or damages, whether direct, indirect, act of nature, arising from the abuse or misuse of this product or any other product required while operating this model.
- The LiPO Battery can be dangerous if improperly handled.
- Always keep your LiPO Battery in a cool area and never use near flame, sparks, or while smoking.
- Keep your LiPO Battery, and all other flammables, out of the reach of children.
- After running your car, all parts of the Motor and ESC can become extremely hot. Be careful not to touch these parts.
- This model is controlled by your radio and that is vulnerable to interference from many outside sources. This interference can cause a loss of control so it is necessary to operate this model in an open area to avoid personal, or property damage. Always ensure turning on your radio first.
- Keep all the products included in the package out of reach of children.
- This model contains many fast rotating parts. Never touch them during operation.
- Follow the instruction included with your radio gear.
- Never operate your model near people or property. The speed of this model has the potential for injury and or damage to people and or property.
- Always use original SWORKz spare and option parts.
- Always encure the buggy is in proper working condition before use.
- Always exercise caution when using any and all tools.

BAG B

330015
Pin M2.2x9.9mm ***x4***

400002
O-ring S5 4.8X1.5 ***x4***

101039
Washer 5x12x0.3 ***x2***

116006R
Ball Bearing 8x16x5mm (Red Rubber Case) ***x4***

1 F/R x2

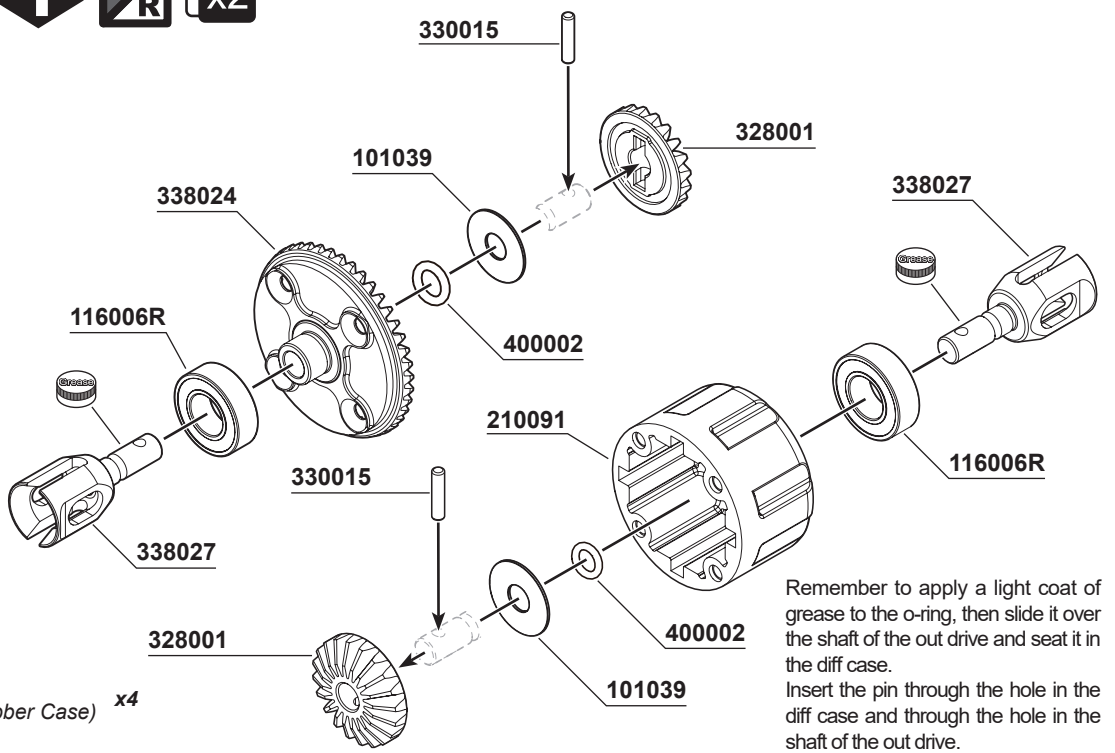

Remember to apply a light coat of grease to the o-ring, then slide it over the shaft of the out drive and seat it in the diff case.
Insert the pin through the hole in the diff case and through the hole in the shaft of the out drive.

108003
M3x10mm FH/ST HEX Screw ***x8***

338025
S35-3W Bevel Gear Shaft ***x4***

101004
Washer 3.5X10X0.2mm ***x8***

2 F/R x2

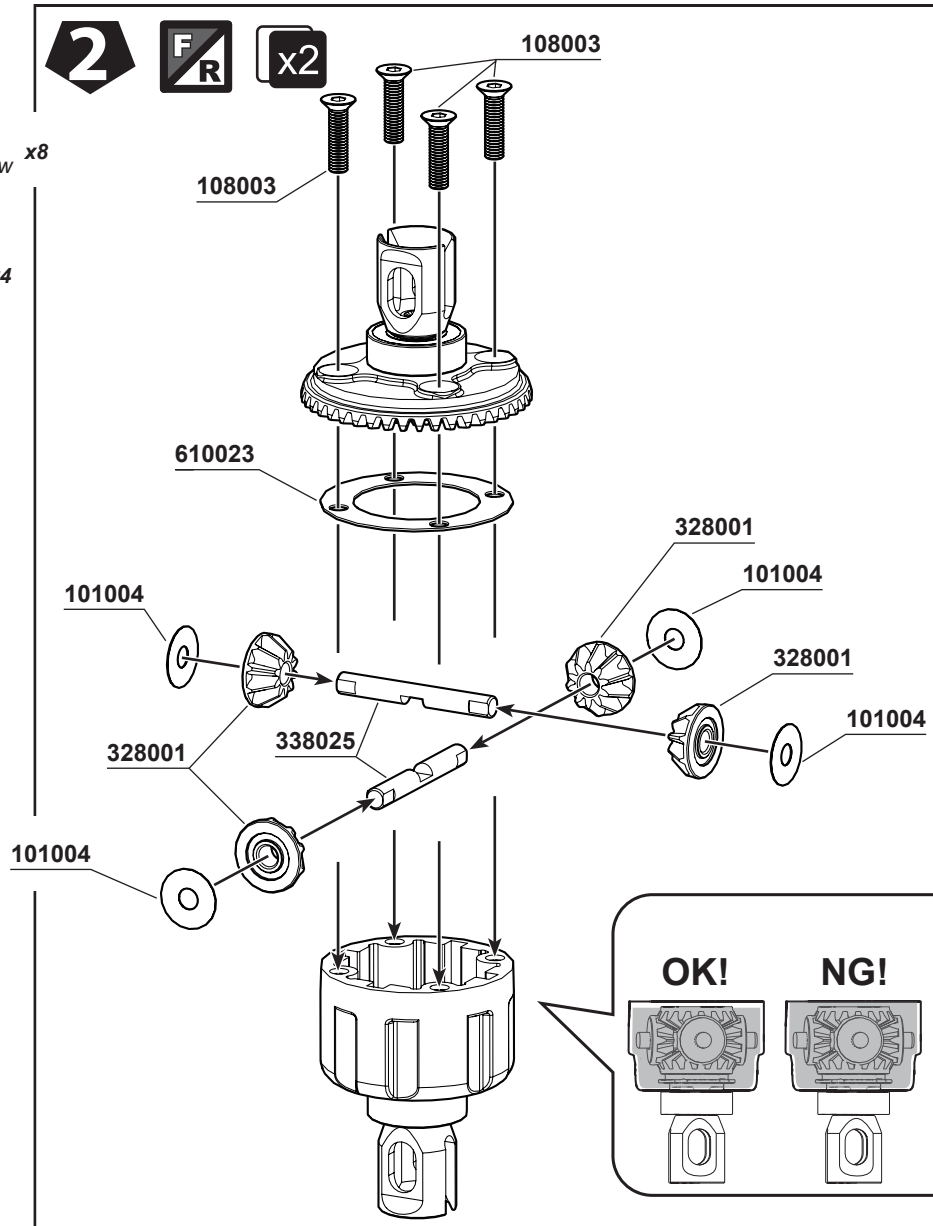

Fill the differentials with oil up to 80% above the satellite gears.
Put the SWORKz Diff. Oil 7000cps for the front Diff. and 3000cps for the rear Diff.

BAG C

330015
Pin M2.2x9.9mm ***x2***

400002
O-ring S5 4.8X1.5 ***x2***

116006R
Ball Bearing 8x16x5mm (Red Rubber Case) ***x4***

101039
Washer 5x12x0.3 ***x2***

3

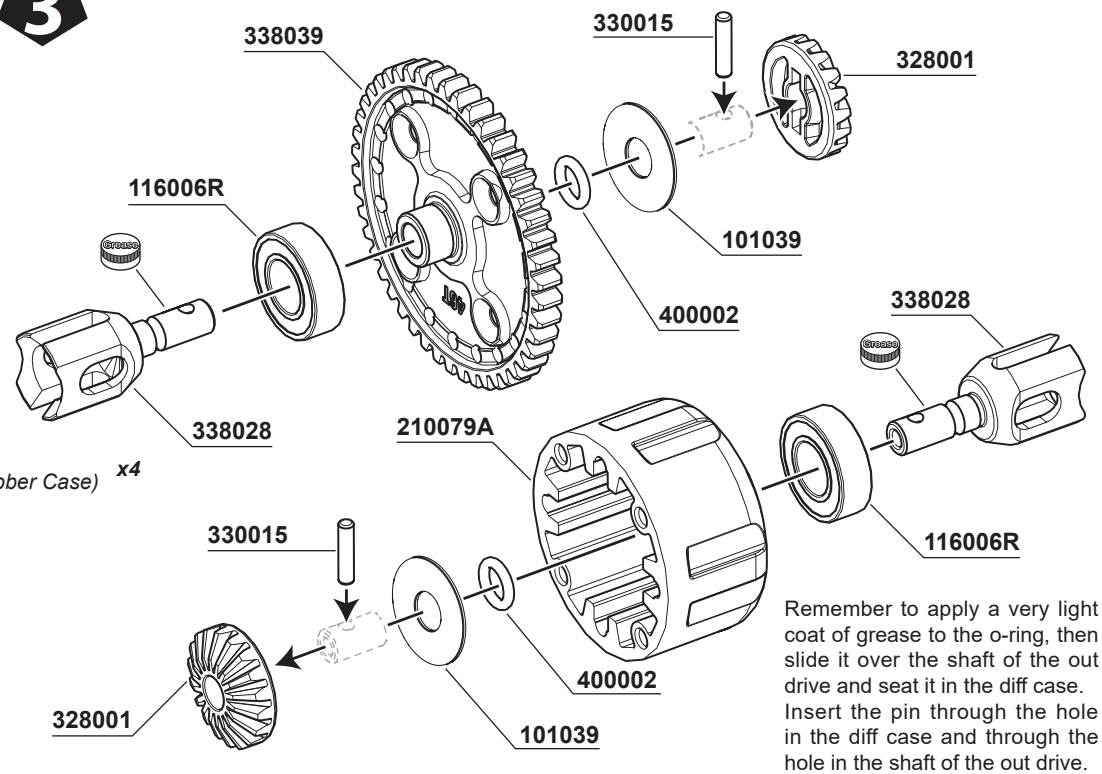

Remember to apply a very light coat of grease to the o-ring, then slide it over the shaft of the out drive and seat it in the diff case. Insert the pin through the hole in the diff case and through the hole in the shaft of the out drive.

108001
M3x12mm FH/ST HEX Screw ***x4***

338025
S35-3W Bevel Gear Shaft ***x4***

101004
Washer 3.5X10X0.2mm ***x4***

4

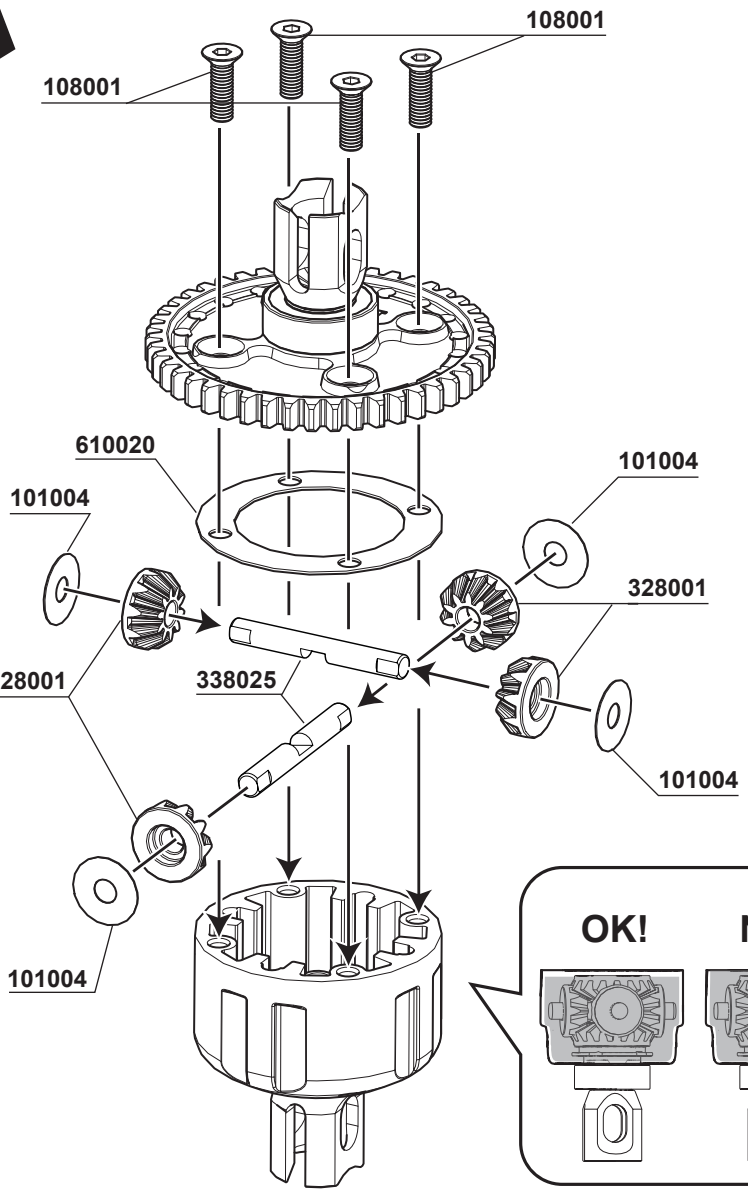

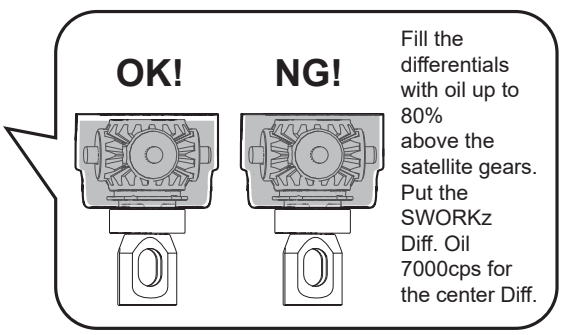

Fill the differentials with oil up to 80% above the satellite gears. Put the SWORKz Diff. Oil 7000cps for the center Diff.

BAG D

5 Front

Pro Tip:
Before installing the M5x4 set screw (104010),
remember to clean the set screw and center driver joint (330661A) first.
Then apply TLC on the set screw.

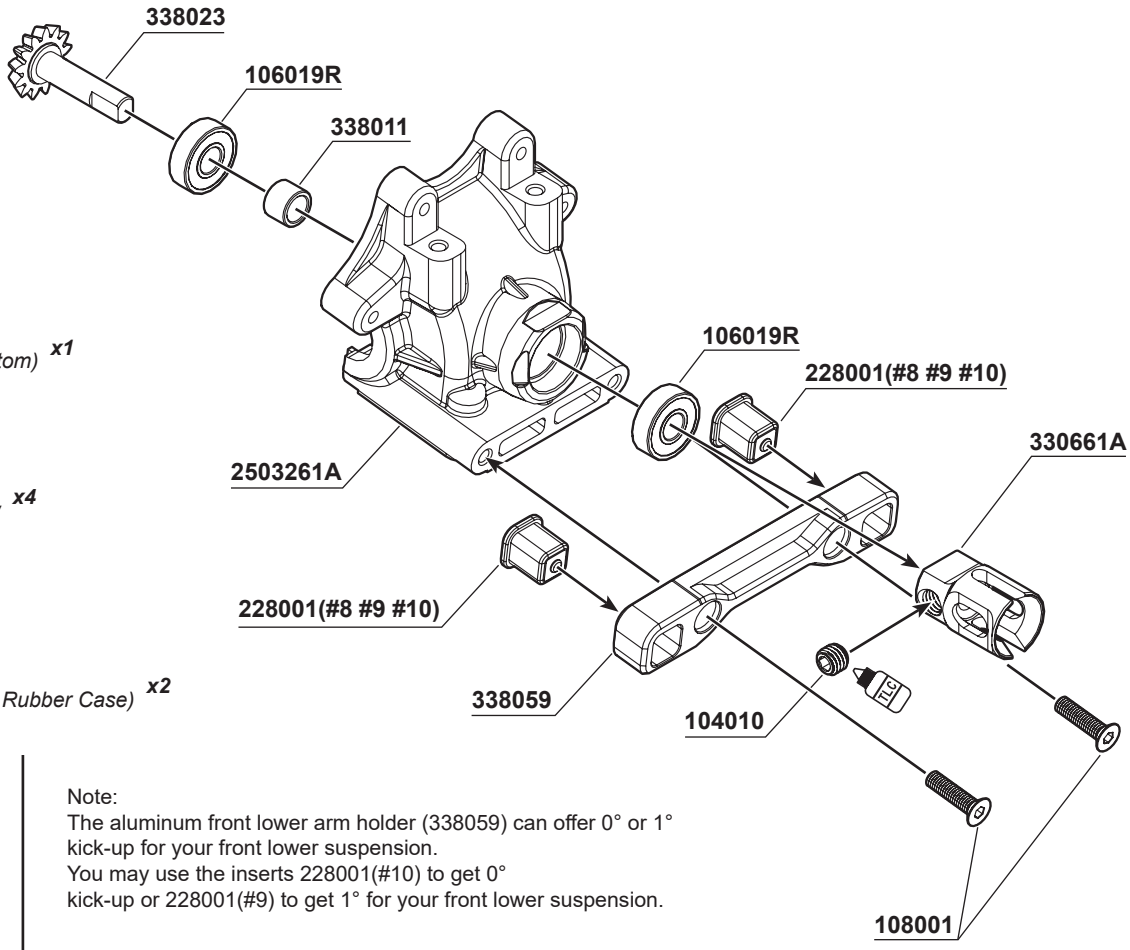



104010
M5x4mm Set Screw (Flat Bottom) ***x1***



108001
M3x12mm FH/ST HEX Screw ***x4***



116019R
Ball Bearing 5x13x4mm (Red Rubber Case) ***x2***

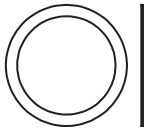

101018
SHIM 13x16x0.2mm ***x4***

Note:
The aluminum front lower arm holder (338059) can offer 0° or 1°
kick-up for your front lower suspension.
You may use the inserts 228001(#10) to get 0°
kick-up or 228001(#9) to get 1° for your front lower suspension.



338011
S35 series Pinion Gear Stopper (5x7x5.1mm) ***x1***

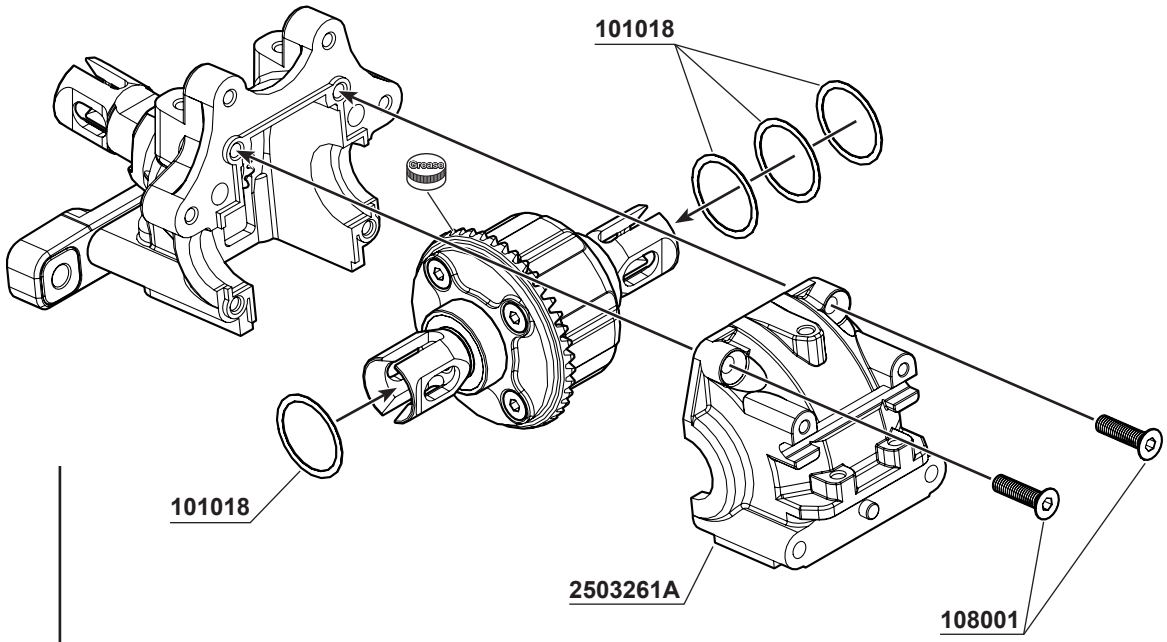

Note:
101018SHIM 13x16x0.2mm
Please use 13x16x0.2mm shims to adjust the play between the crown gear and pinion gear.
Standard suggestion is 1pc shim on the diff crown gear side and 3 pcs on the other side.

BAG D

6 Rear

Pro Tip:
Before installing the M5x4 set screw (104010), remember to clean the set screw and center driver joint (330661A) first. Then apply TLC on the set screw.



108001
M3x12mm FH/ST HEX Screw ***x4***



104010
M5x4mm Set Screw (Flat Bottom) ***x1***



116019R
Ball Bearing 5x13x4mm (Red Rubber Case) ***x2***

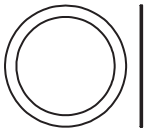

101018
SHIM 13x16x0.2mm ***x4***



338011
S35 series Pinion Gear Stopper (5x7x5.1mm) ***x1***

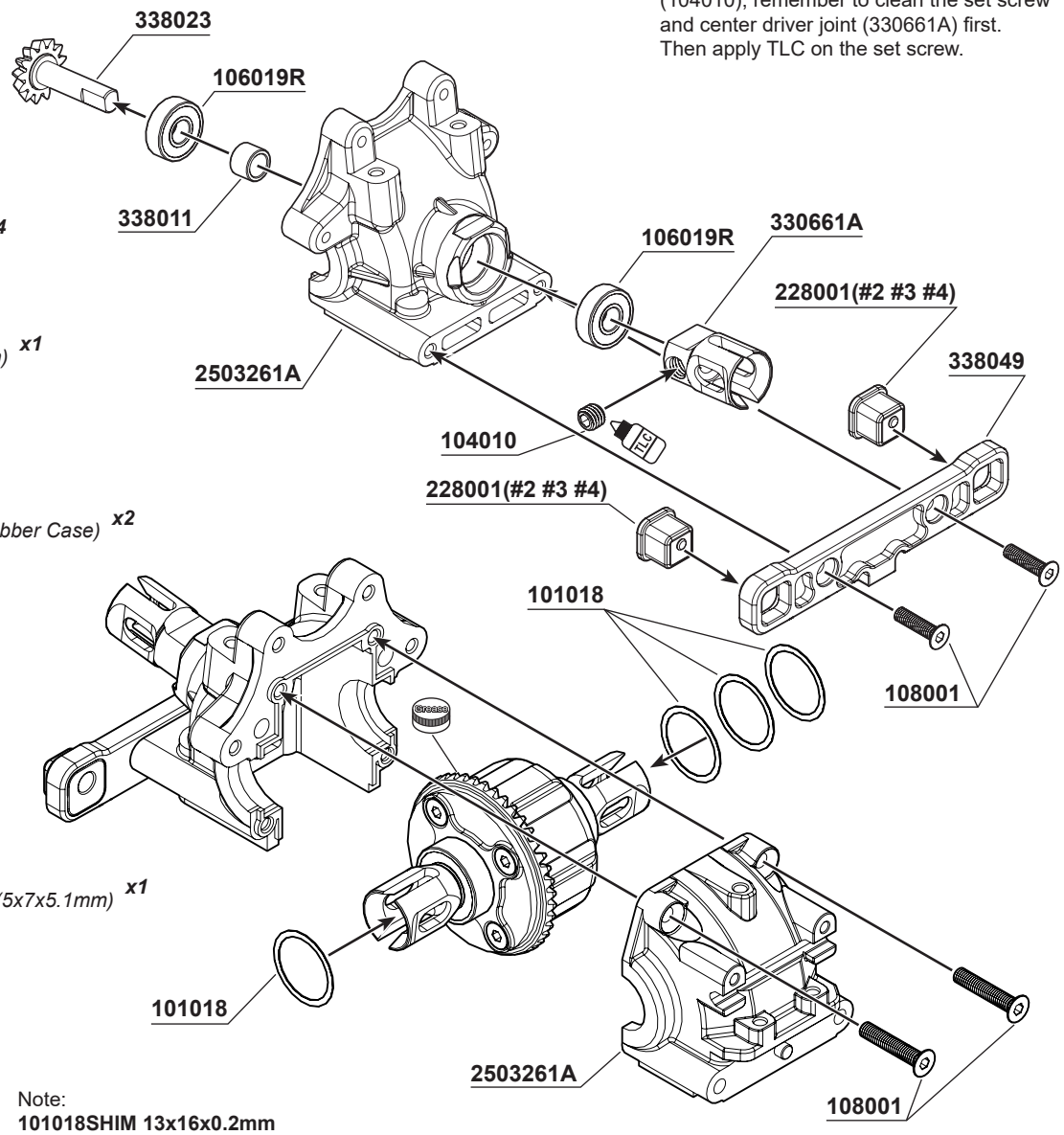

Note:
101018SHIM 13x16x0.2mm
Please use 13x16x0.2mm shims to adjust the play between the crown gear and pinion gear.
Standard suggestion is 1pc shim on the diff crown gear side and 3 pcs on the other side.

BAG E1

7 L R x2



106005
M3x15mm Hex Socket OH/TP Screw ***x2***



106021A
M4x10mm Hex Socket OH/TP Screw ***X2***

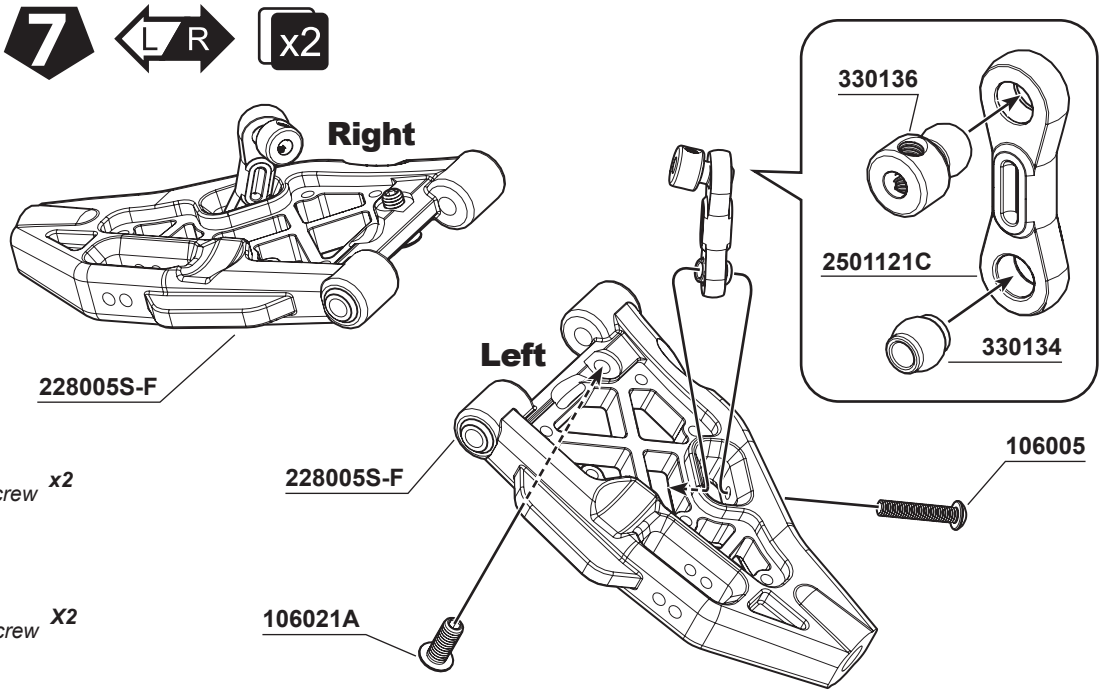

BAG E1

8

108008
M3x35mm FH/ST HEX Screw x2

101020A
3mm Countersunk Washers (GM) x2

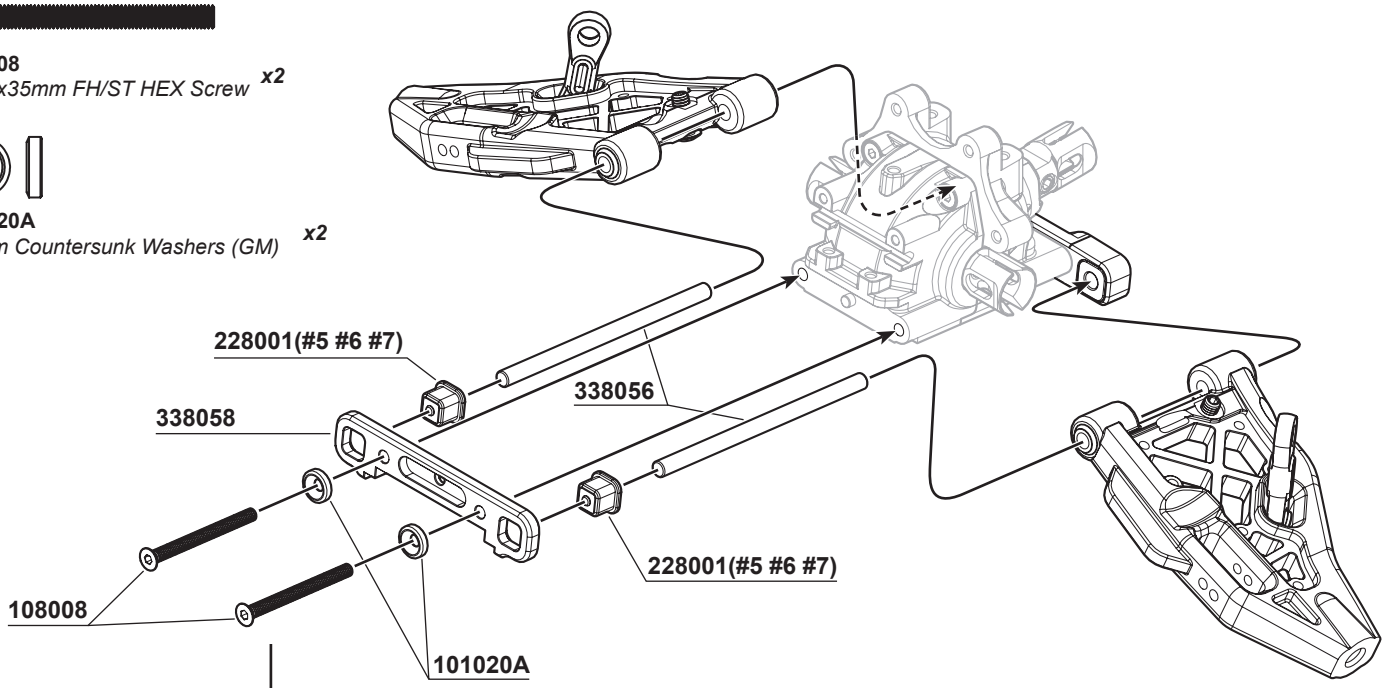

338056
S35-4 Series Lower Arm Hinge Pin (68.5mm) x2

9

104004
M3x3mm Set Screw x2

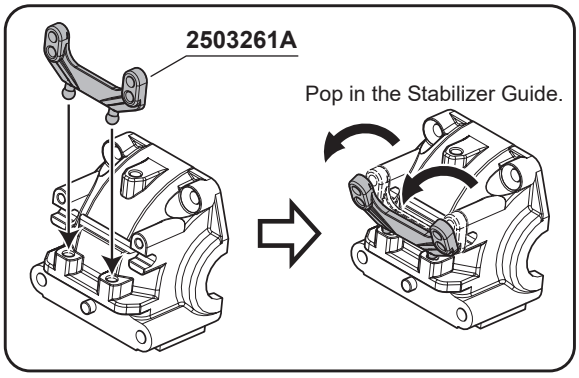

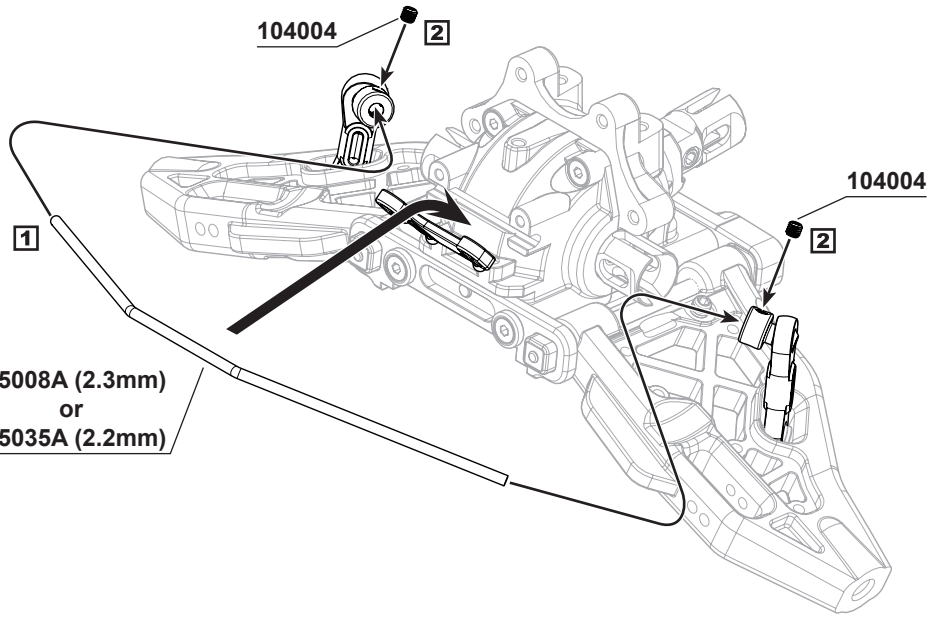

BAG E1

10

104005
M3x4mm Set Screw x2

106013
M2.5x8mmH ex Socket OH/TPScrew x2

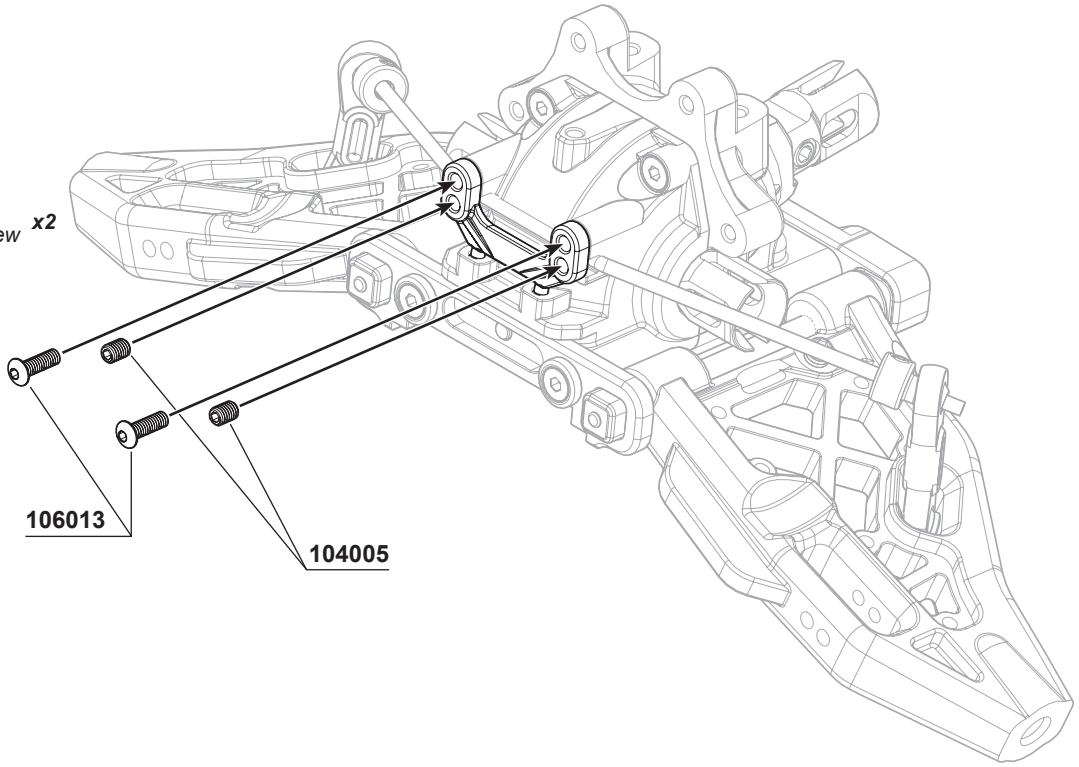

11

L R x2

106002
M3x10mm Hex Socket OH/TP Screw x1

108003
M3x10mm FH/ST HEX Screw x2

108006
M3x8mm FH/ST HEX Screw x2

Note:
The aluminum front upper arm holder (338057) can offer either 0° or + -1° kick-up for your front upper arm suspension.
You may use the inserts 228001(#13) to get 0° kick-up or 228001(#12) to get +-1° for your front upper suspension.

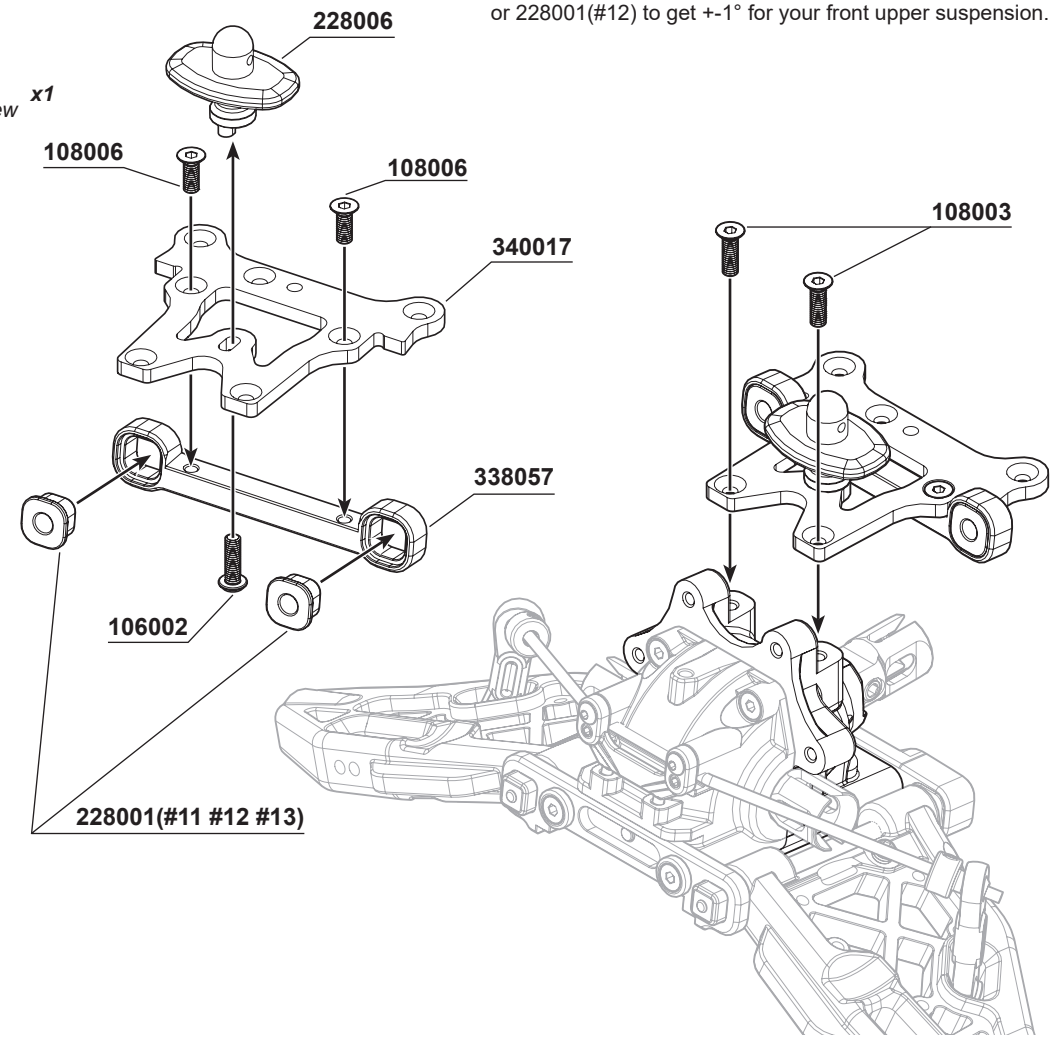

BAG E1

12 L R x2

108001
M3x12mm FH/ST HEX Screw x4

106015
M3x5mm Hex Socket OH/TP Screw x2

330119
Front Upper Arm HingPin x2

Pro Tip:
The S35-3 Front Upper Arm Adjust Inserts
can give different steering adjustments (Ackerman).
Put all inserts behind the front upper arms, you will get faster steering response.
Otherwise put all inserts in front of the upper arms,
you will get more stable steering response.
Try to use 2503260-1 or 2503260-3 to adjust the front upper arm position.

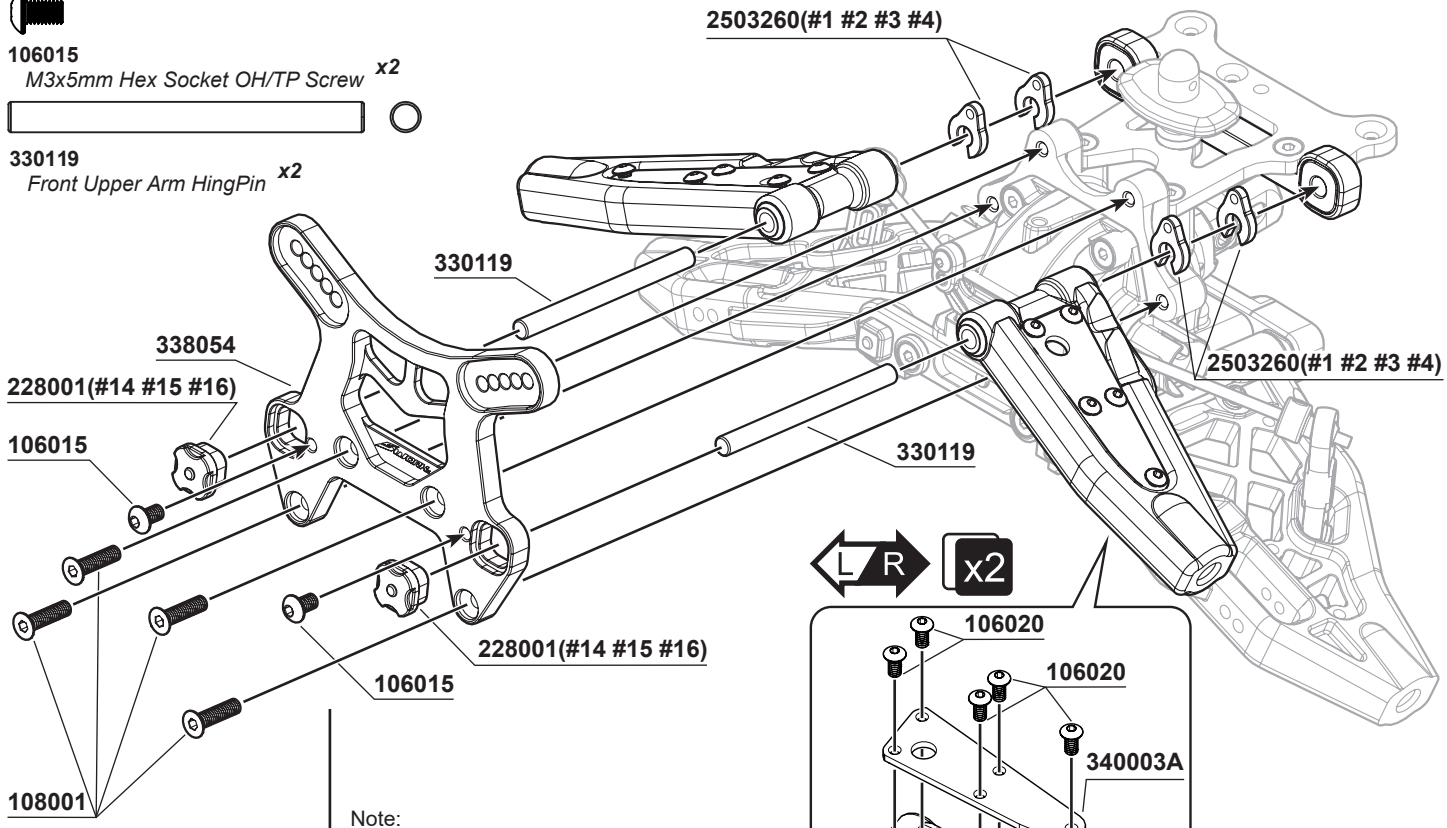

Note:
2503260-1
S35-3 Front Upper Arm Adjust Insert (0.9mm)
2503260-2
S35-3 Front Upper Arm Adjust Insert (1.0mm)
2503260-3
S35-3 Front Upper Arm Adjust Insert (1.1mm)
2503260-4
S35-3 Front Upper Arm Adjust Insert (2.0mm)

Note:
2503260-9
S35-3 Front Shock Tower Upper Arm Holder Insert (+/- 1.0 Degree)
2503260-10
S35-3 Front Shock Tower Upper Arm Holder Insert (0 Degree)

106020
M2.5x5mm Hex Socket OH/TP Screw x10

13 L R x2

106005
M3x15mm Hex Socket OH/TP Screw x2

106021A
M4x10mm Hex Socket OH/TP Screw X2

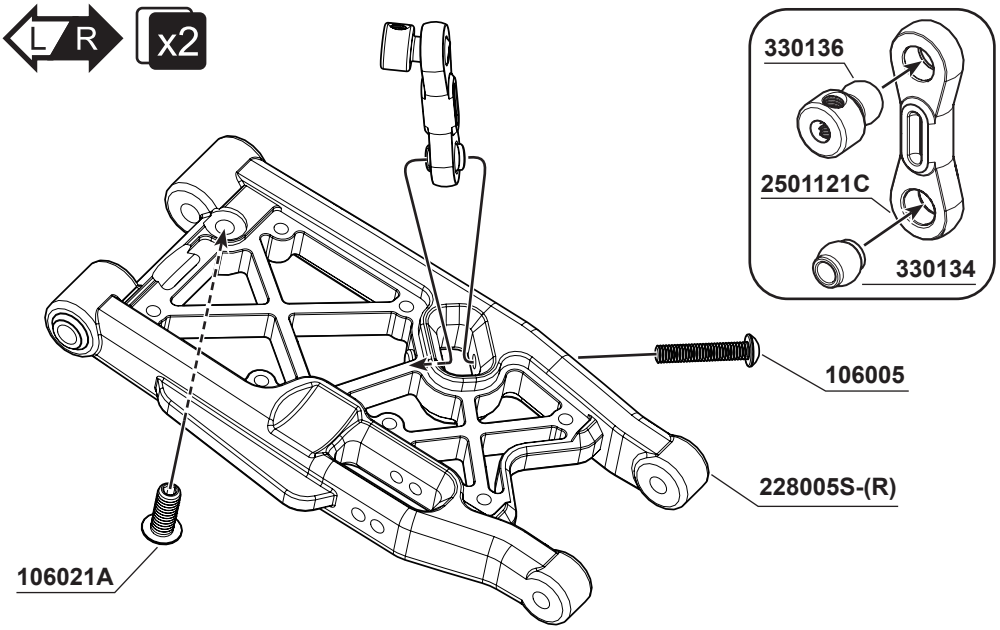

BAG E1

14



106002
M3x10mm Hex Socket OH/TP Screw ***x1***



108001
M3x12mm FH/ST HEX Screw ***x4***

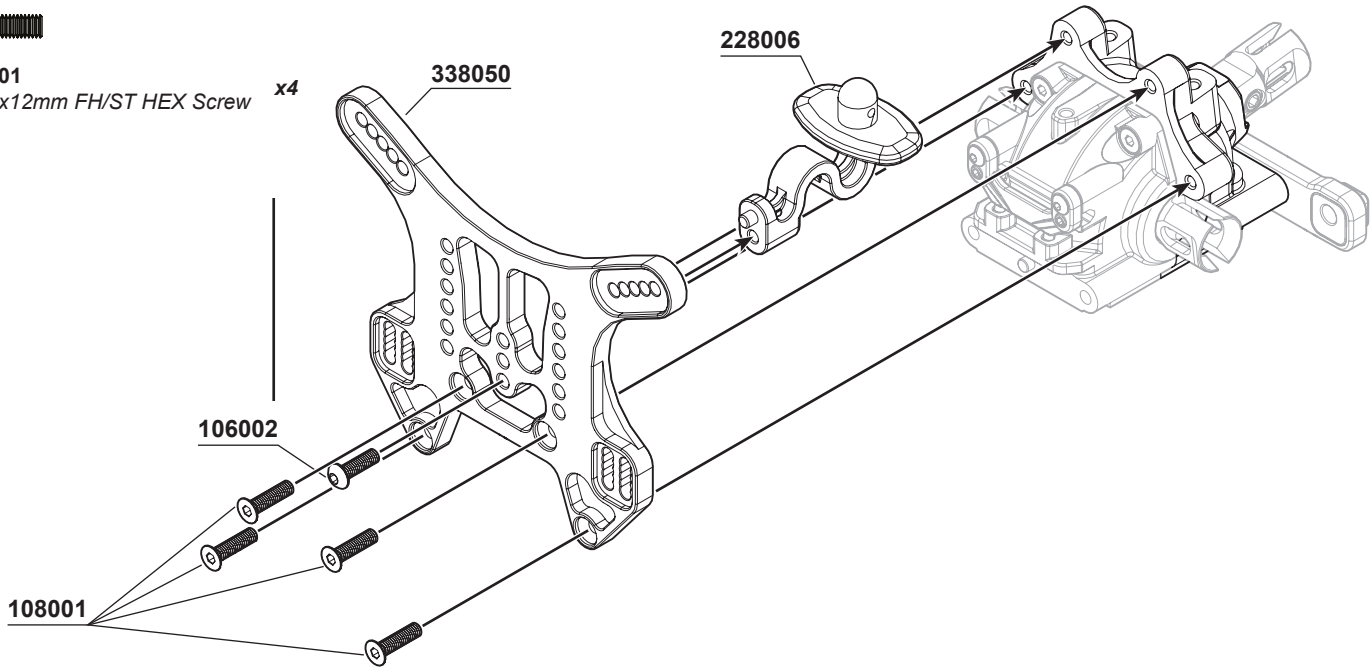

15



108008
M3x35mm FH/ST HEX Screw ***x2***

PRO TIP:
The S35-4 Aluminum Rear Lower Fully Adjustable Toe-In Block (338014) can use 3 types of square inserts to get 1.0/2.0/3.0 3 different toe in angles. Also plus 3 different rear lower arm kick up degrees.

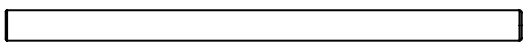

338056
S35-4 Series Lower Arm Hinge Pin (68.5mm) ***x2***

OPTION:
228001-2 S35-4 Series Rear Lower Arm Holder Square Insert (+1/+1)
228001-3 S35-4 Series Rear Lower Arm Holder Square Insert (0/+1)
228001-4 S35-4 Series Rear Lower Arm Holder Square Insert (0)

BAG E1

16

104004
M3x3mm Set Screw ***x2***

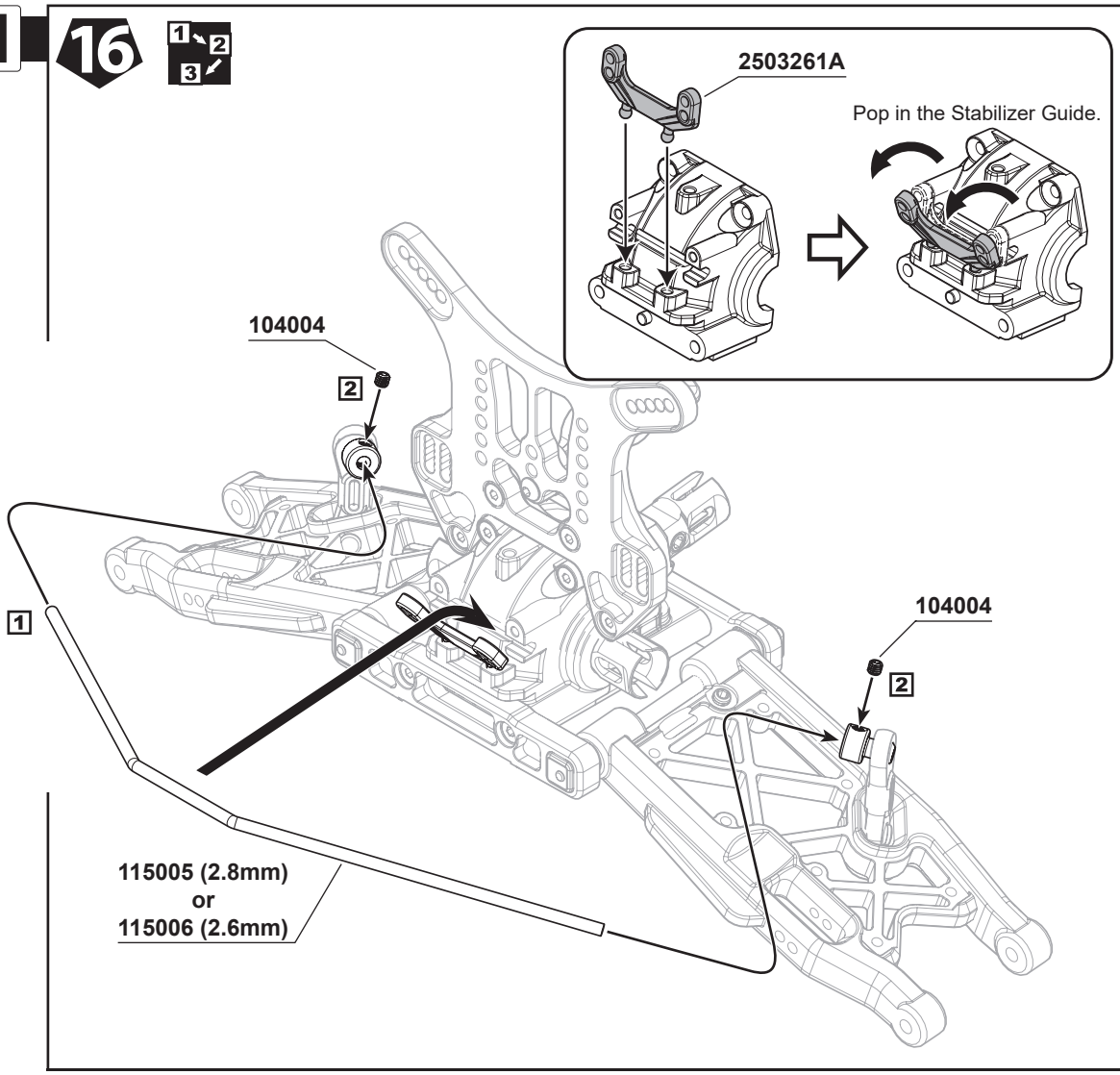

17

104005
M3x4mm Set Screw ***x2***

106013
M2.5x8mmH ex Socket OH/TPScrew ***x2***

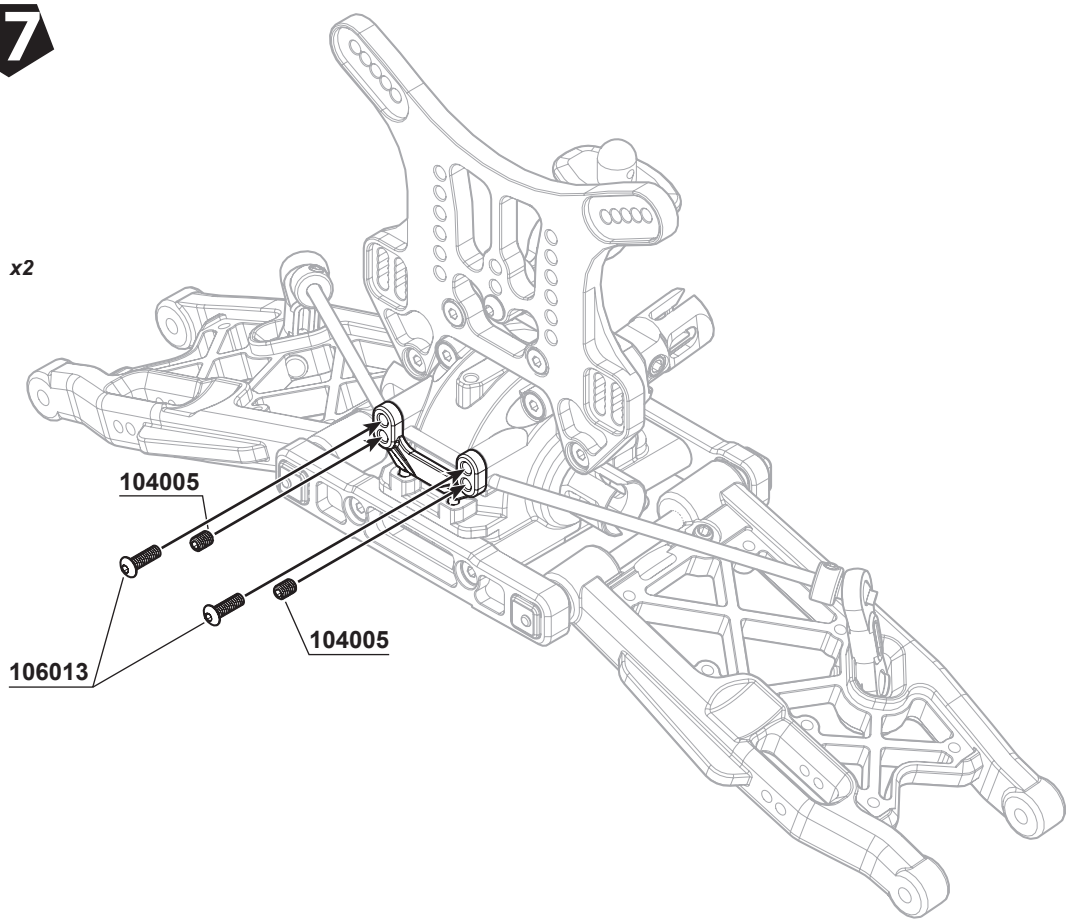

BAG E3

18 L R x2



106002
M3x10mm Hex Socket OH/TP Screw ***x4***

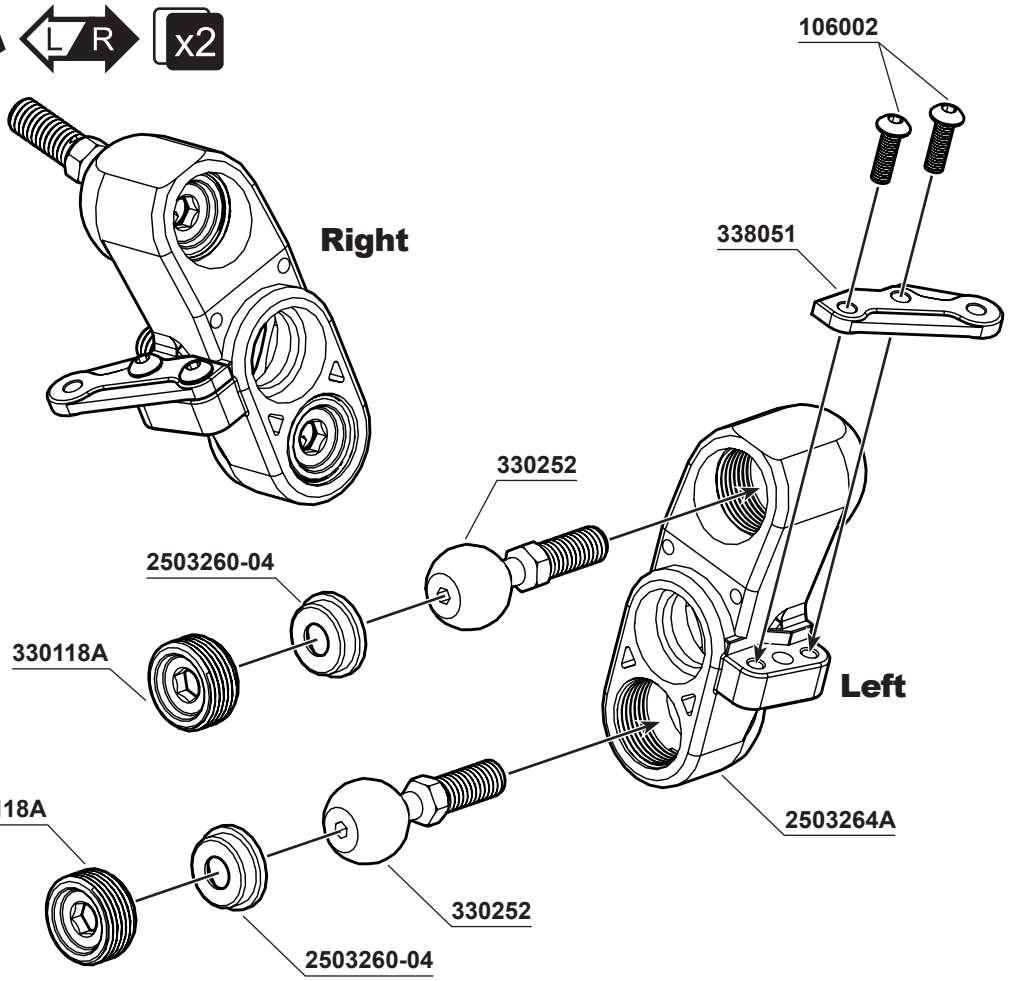

Screw and adjust 330118A Knuckle Pivot Ball Nut so as the pivot ball can be moved smoothly.

19 1 2 3 L R x2



116006R
Ball Bearing 8x16x5mm (Red Rubber Case) ***x4***

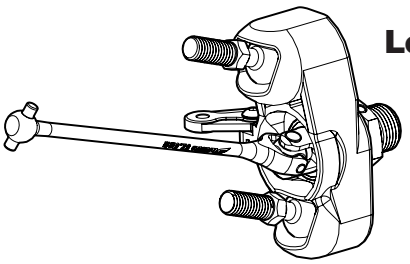



104010
M5x4mm Set Screw (Flat Bottom) ***x2***

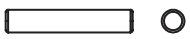

330124
Pin M3.0x16.8mm ***x2***



101018
SHIM 13x16x0.2mm ***x2***

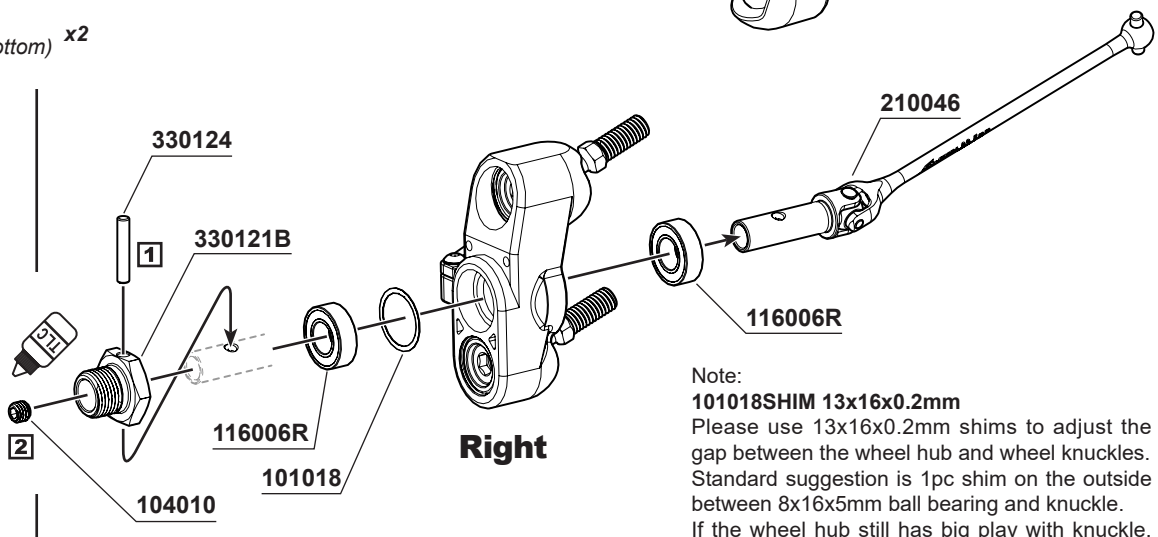

Note:
101018SHIM 13x16x0.2mm
Please use 13x16x0.2mm shims to adjust the gap between the wheel hub and wheel knuckles. Standard suggestion is 1pc shim on the outside between 8x16x5mm ball bearing and knuckle.
If the wheel hub still has big play with knuckle, please try to put another shim in another side between ball bearing and knuckle.

BAG E3 20

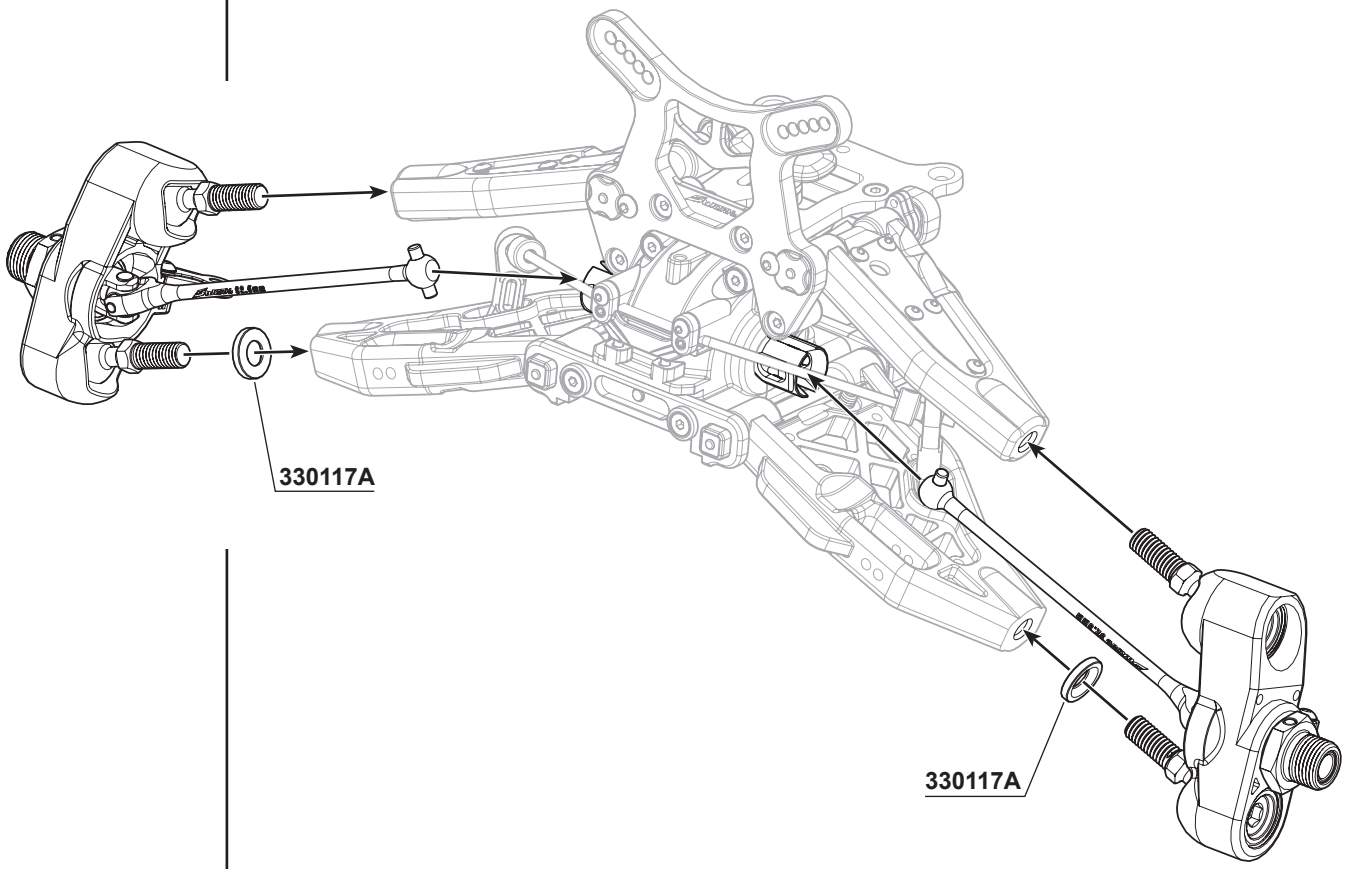

BAG E2 21

103001
M3 Nut Lock **x2**

101021
M3x8xT1mm **x2**

117003
Flange Ball Bearing 3x6x2.5mm **x4**

106007
M3x12mm Hex Socket OH/TP Screw(HT) **x2**

116004R
Ball Bearing 6x10x3mm (Red Rubber Case) **x2**

106014
M2x6mm Hex Socket OH/TP Screw **x1**

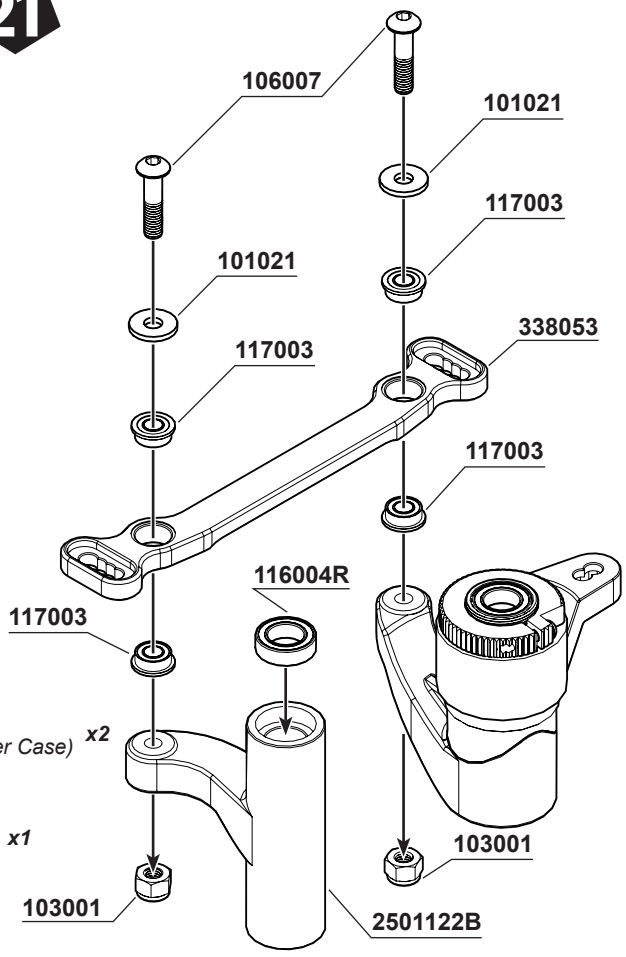

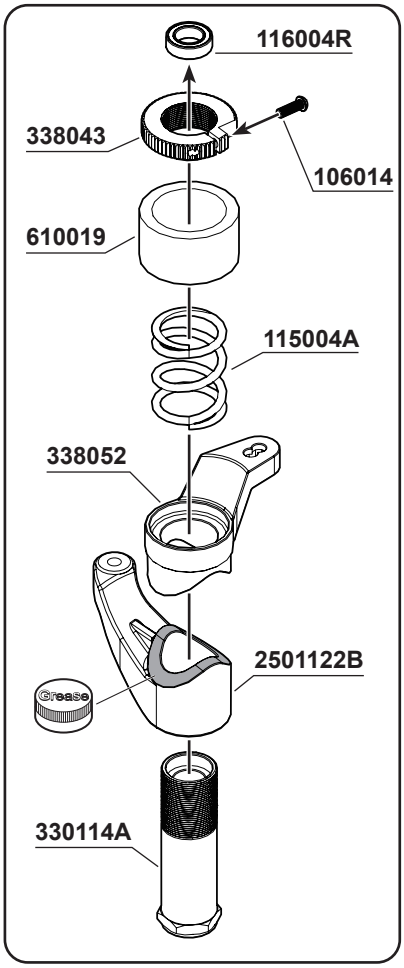

BAG E2 22



108003
M3x10mm FH/ST HEX Screw ***x2***



116004R
Ball Bearing 6x10x3mm (Red Rubber Case) ***x2***



101019
SHIM 6.0x10.0x0.2mm ***x1***

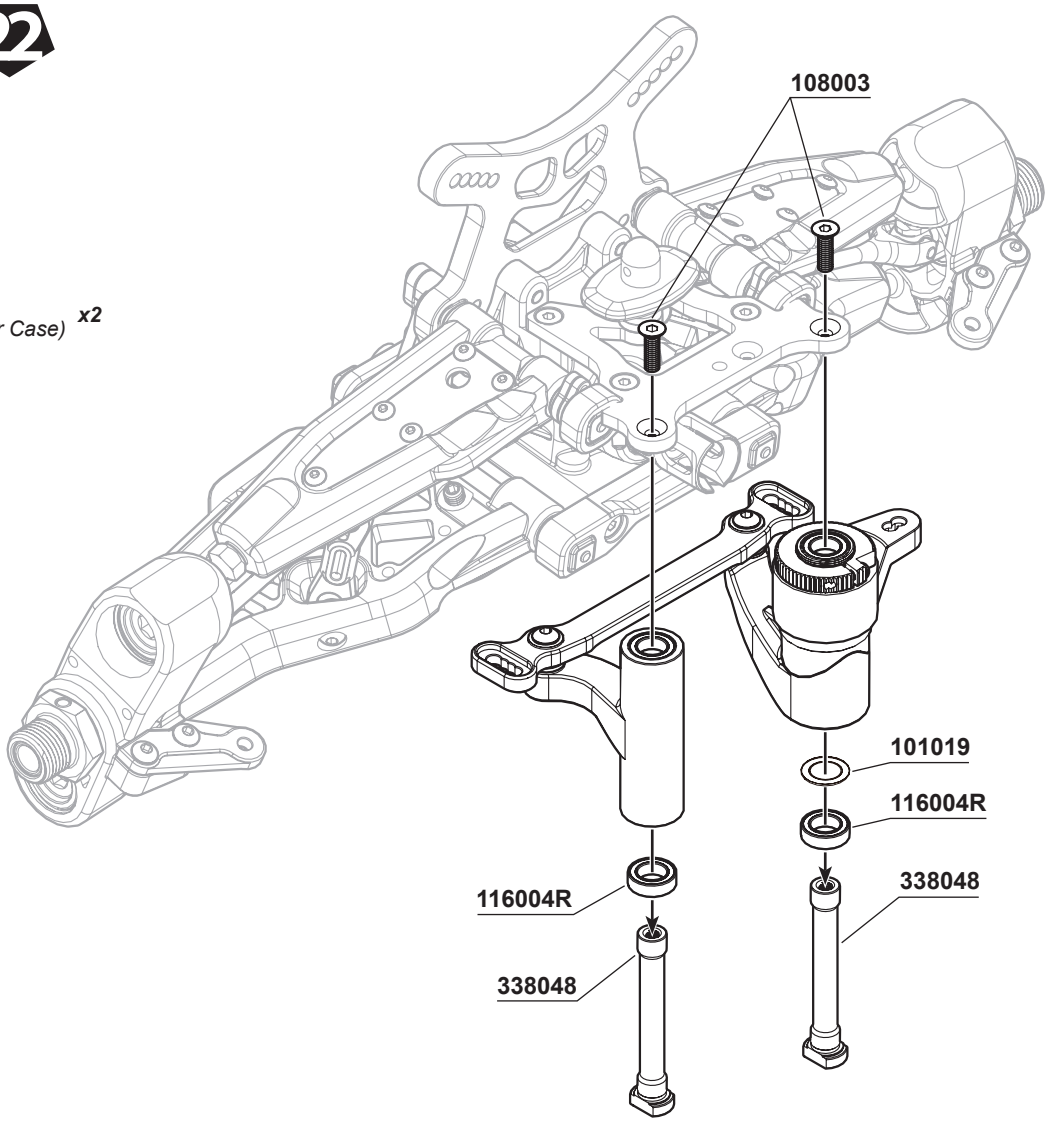

BAG E3 23



104010
M5x4mm Set Screw (Flat Bottom) ***x2***

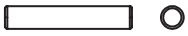

330124
Pin M3.0x16.8mm ***x2***



116006R
Ball Bearing 8x16x5mm (Red Rubber Case) ***x4***



106009
M3x25mm Hex Socket OH/TP Screw ***x4***



103001
M3 Nut Lock ***x4***



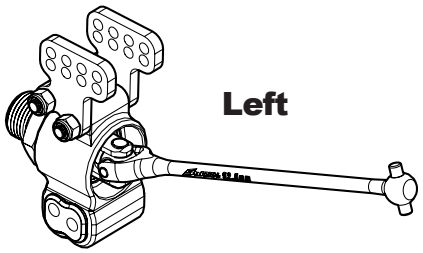

PRO TIP:
The new multi adjustable rear hub can be set to a wider or a narrow configuration using the inserts 228001 (#17 #18)

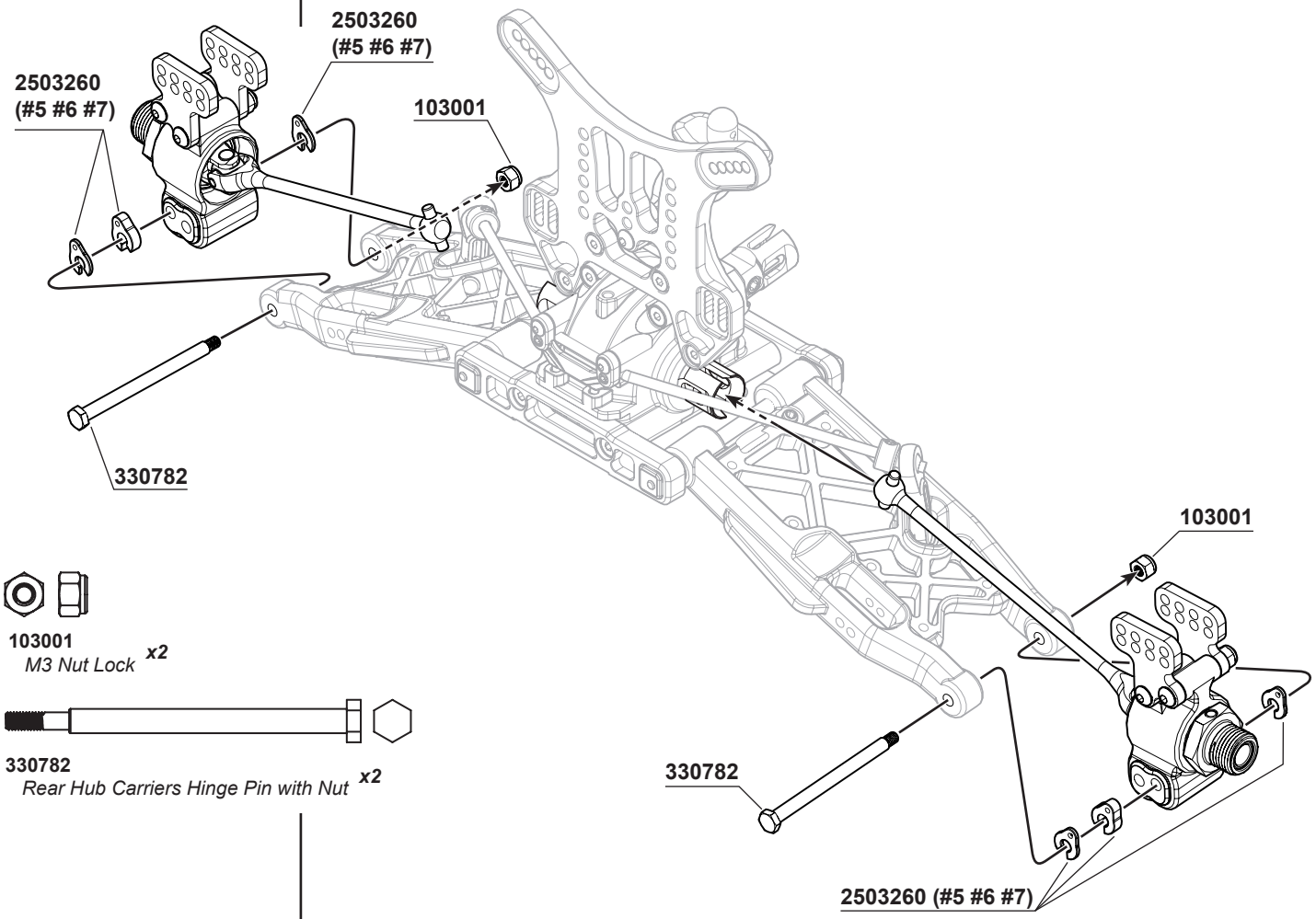

103001
M3 Nut Lock ***x2***

330782
Rear Hub Carriers Hinge Pin with Nut ***x2***



330123A
Rear Upper Sus. Arm Turnbuckles ***x2***

25 L R x2

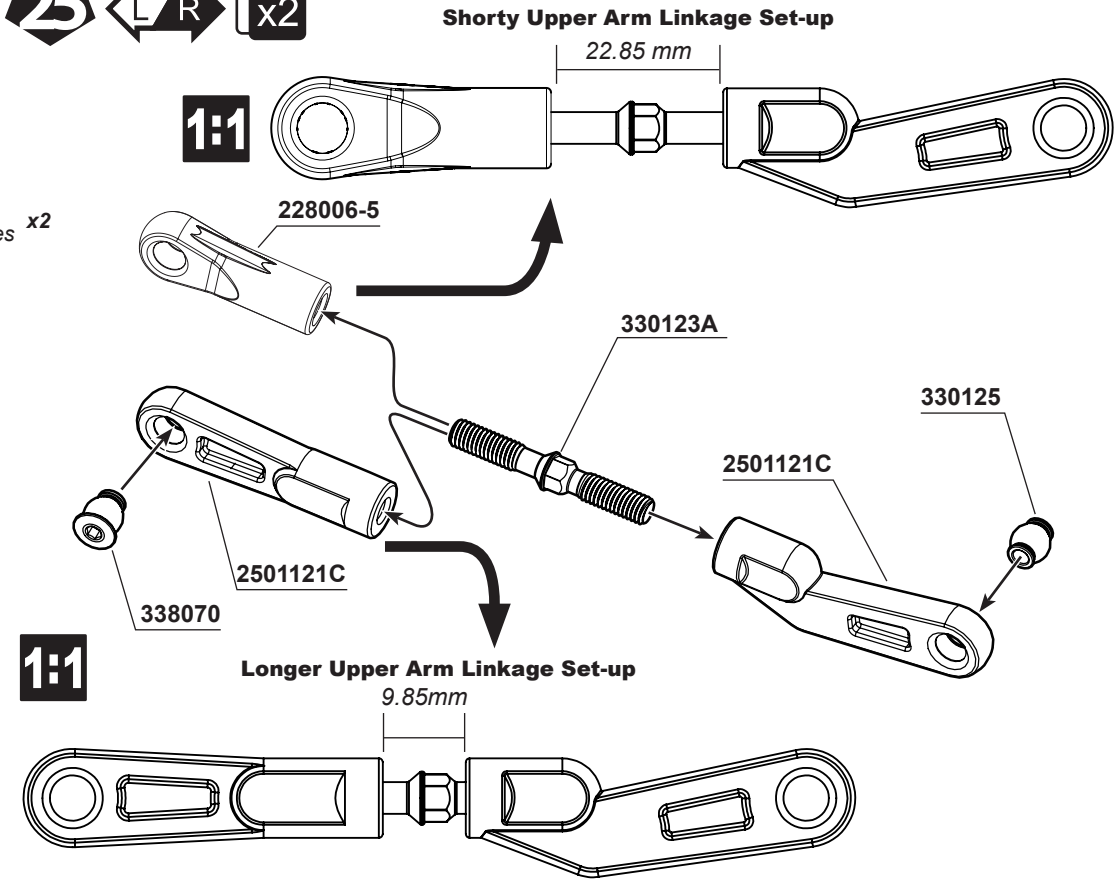

106002
M3x10mm Hex Socket OH/TP Screw ***x2***

106009
M3x25mm Hex Socket OH/TP Screw ***x2***

103001
M3 Nut Lock ***x2***

26 L R x2

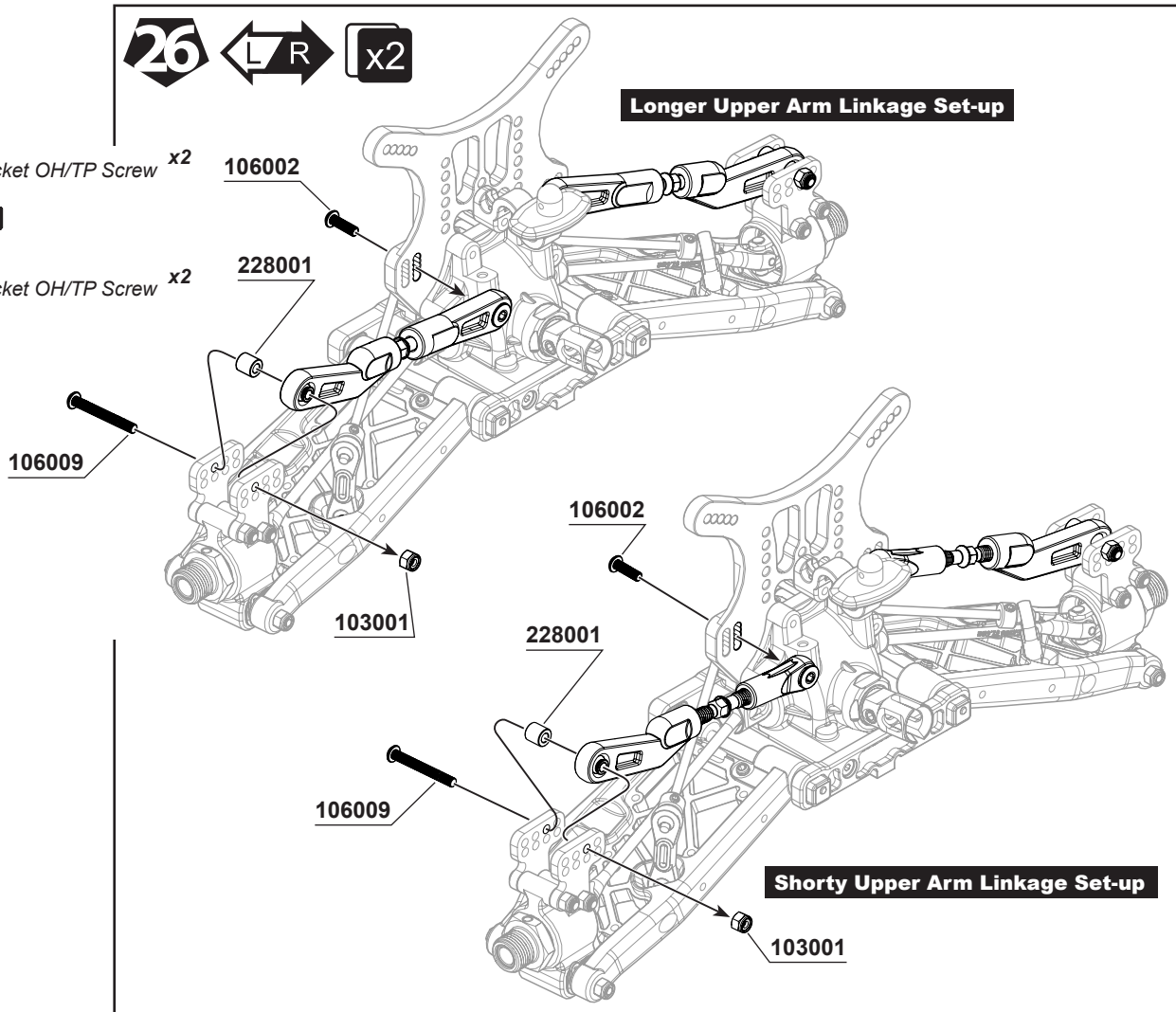

103001
M3 Nut Lock ***x6***

106003
M3x16mm Hex Socket OH/TP Screw ***x4***

108019
M2.6x6mm Flat Head Screw - Hex Socket ***x2***

27

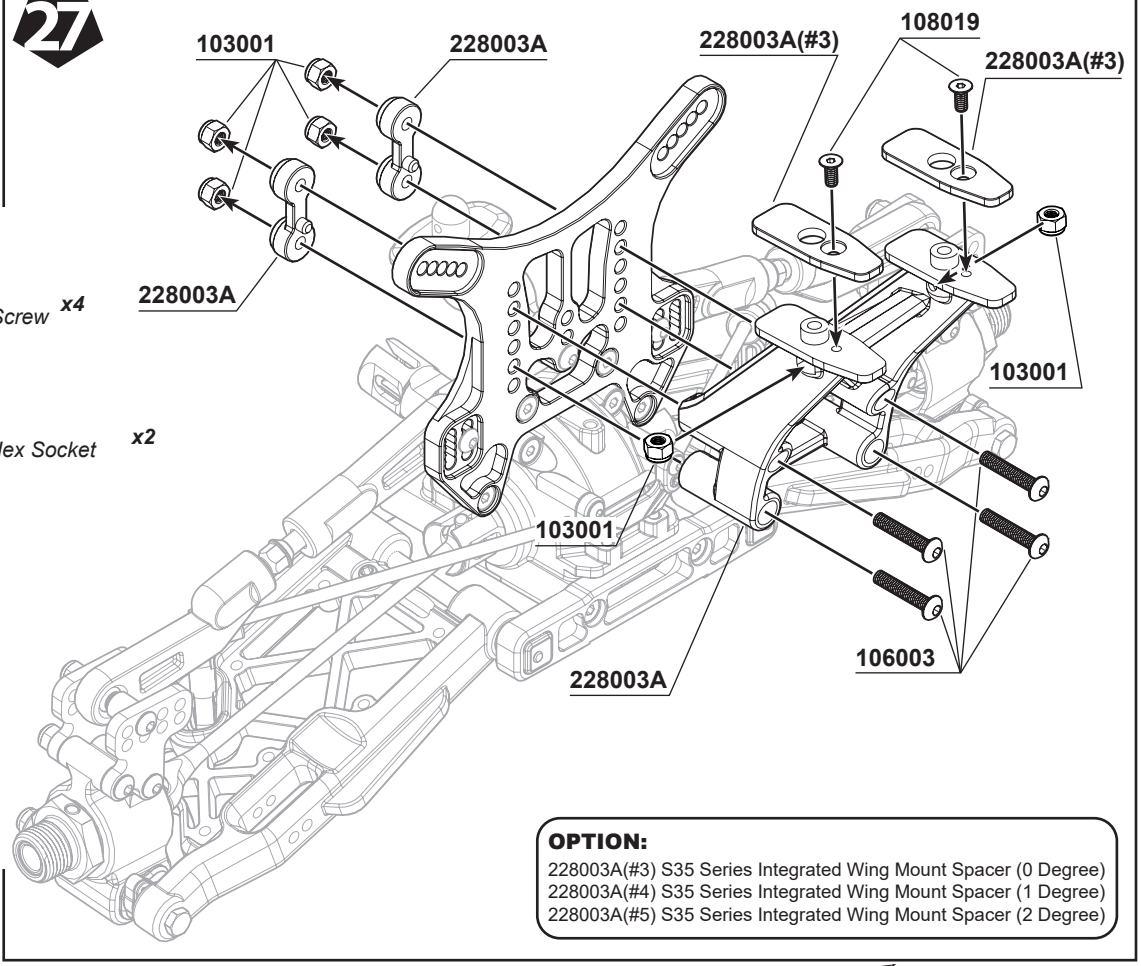

OPTION:
228003A(#3) S35 Series Integrated Wing Mount Spacer (0 Degree)
228003A(#4) S35 Series Integrated Wing Mount Spacer (1 Degree)
228003A(#5) S35 Series Integrated Wing Mount Spacer (2 Degree)

BAG F

28



108007
M3x6mm FH/ST HEX Screw ***x10***

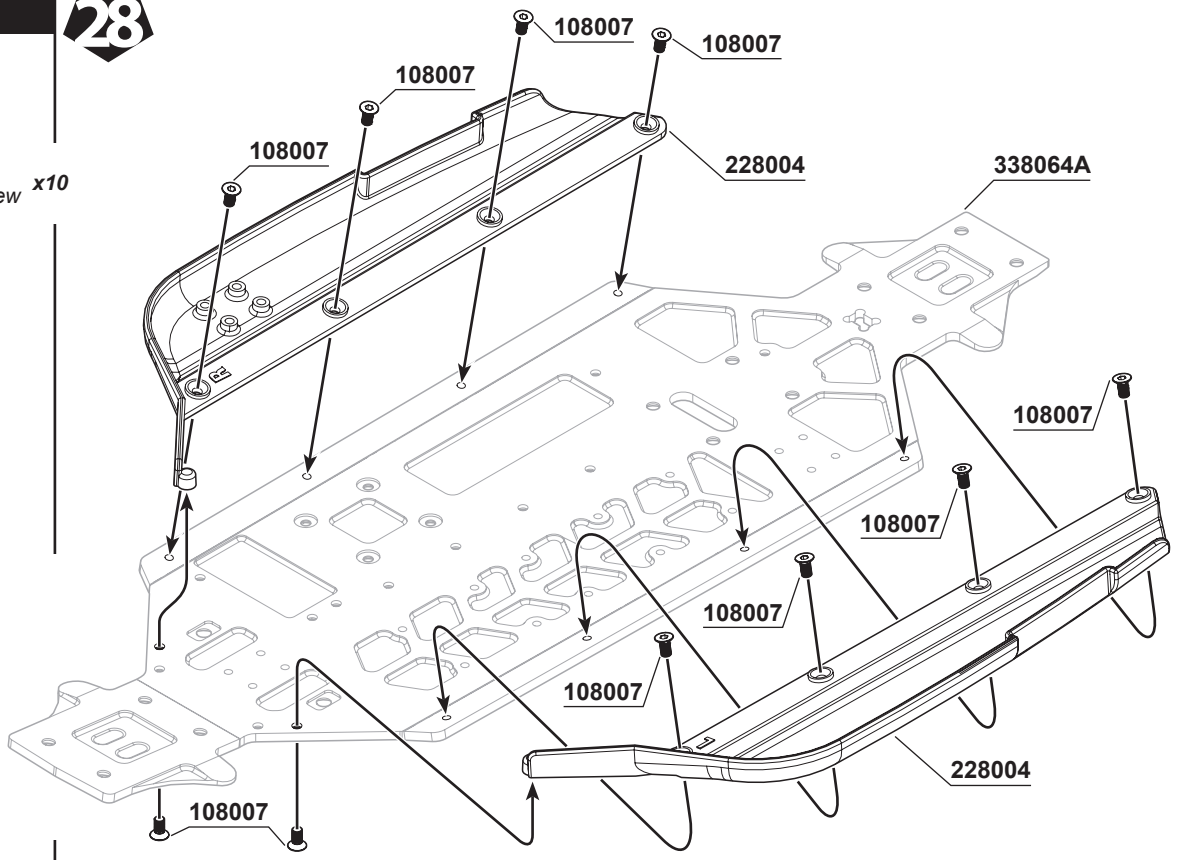

29



108003
M3x10mm FH/ST HEX Screw ***x2***



108010
M4x10mm FH/ST HEX Screw ***x2***



108012
M4x16mm FH/ST HEX Screw ***x4***

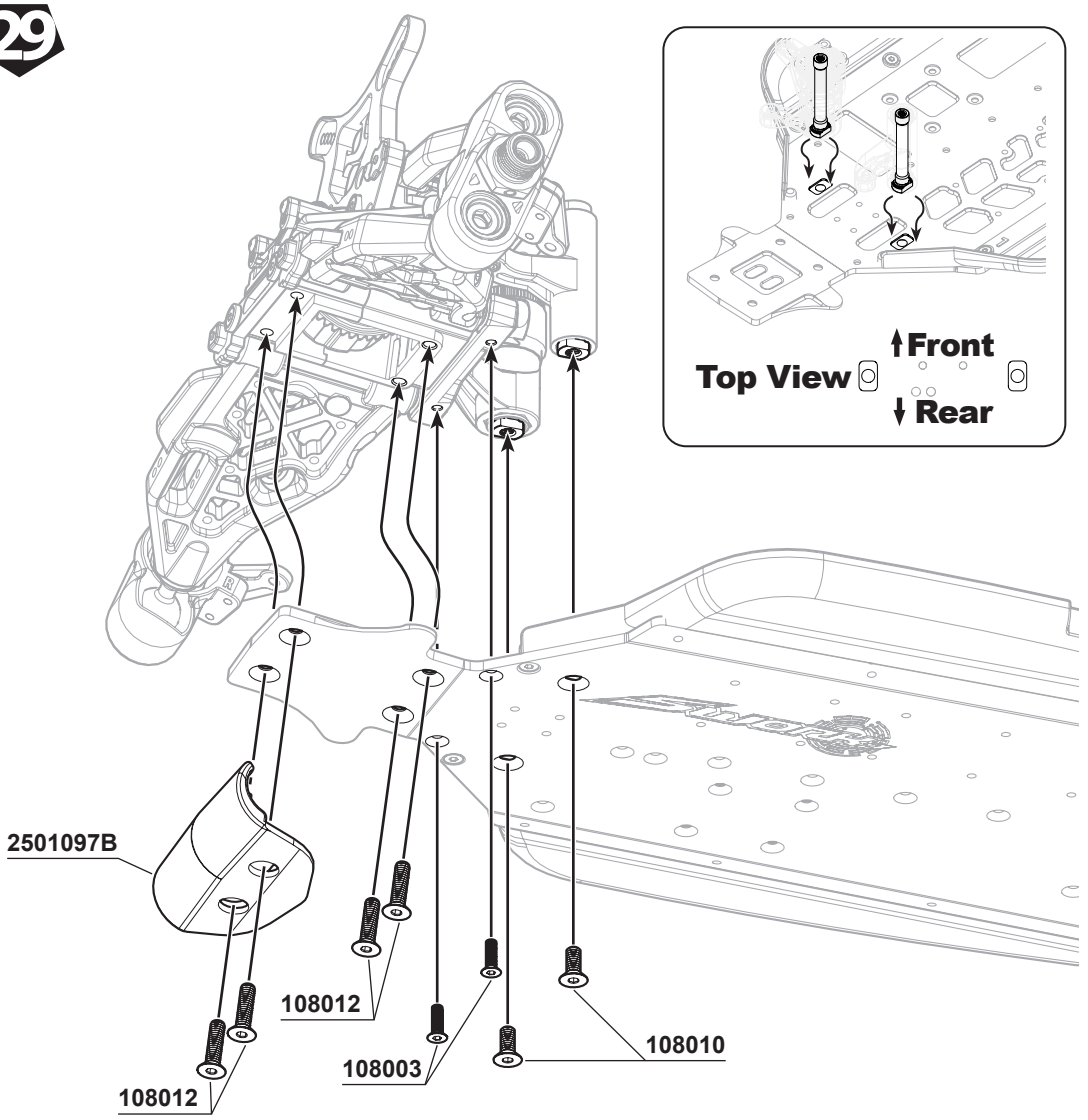

30

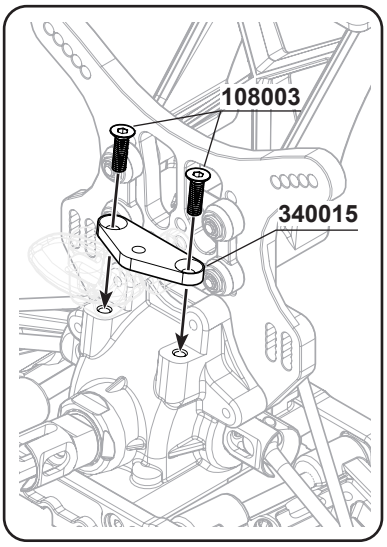



108003
M3x10mm FH/ST HEX Screw ***x2***



108012
M4x16mm FH/ST HEX Screw ***x4***

31



PRO TIP:
Not only use 105020 (M4x10mm Cap Screw) but there is also included 105012(M3x10mm Cap Screw) for lock on your BL motor.



106002
M3x10mm Hex Socket OH/TP Screw ***x2***



106008
M3x12mm Hex Socket OH/TP Screw ***x2***



106006
M3x20mm Hex Socket OH/TP Screw ***x2***



104011
M4x4mm Set Screw (Flat Bottom) ***x1***



106024
M4x12mm Hex Socket OH/ST Screw ***x2***

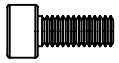

105020
M4x10mm Cap Screw ***x2***

BAG F

32



108003
M3x10mm FH/ST HEX Screw ***x4***



108010
M4x10mm FH/ST HEX Screw ***x4***

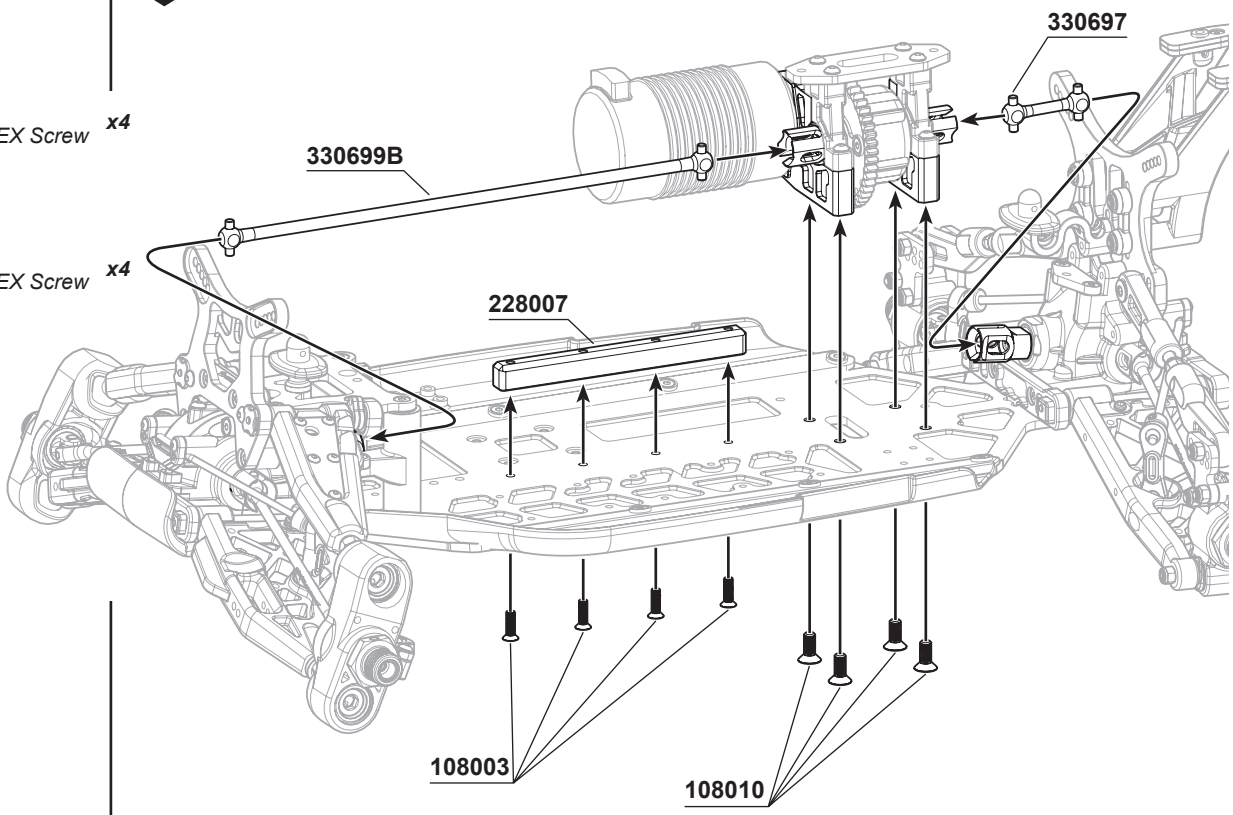

33



106001
M3x10mm Hex Socket OH/TP Screw ***x1***



108003
M3x10mm FH/ST HEX Screw ***x3***



101020A
3mm Countersunk Washers (GM) ***x3***



104014
M5X25mm set screw ***x1***

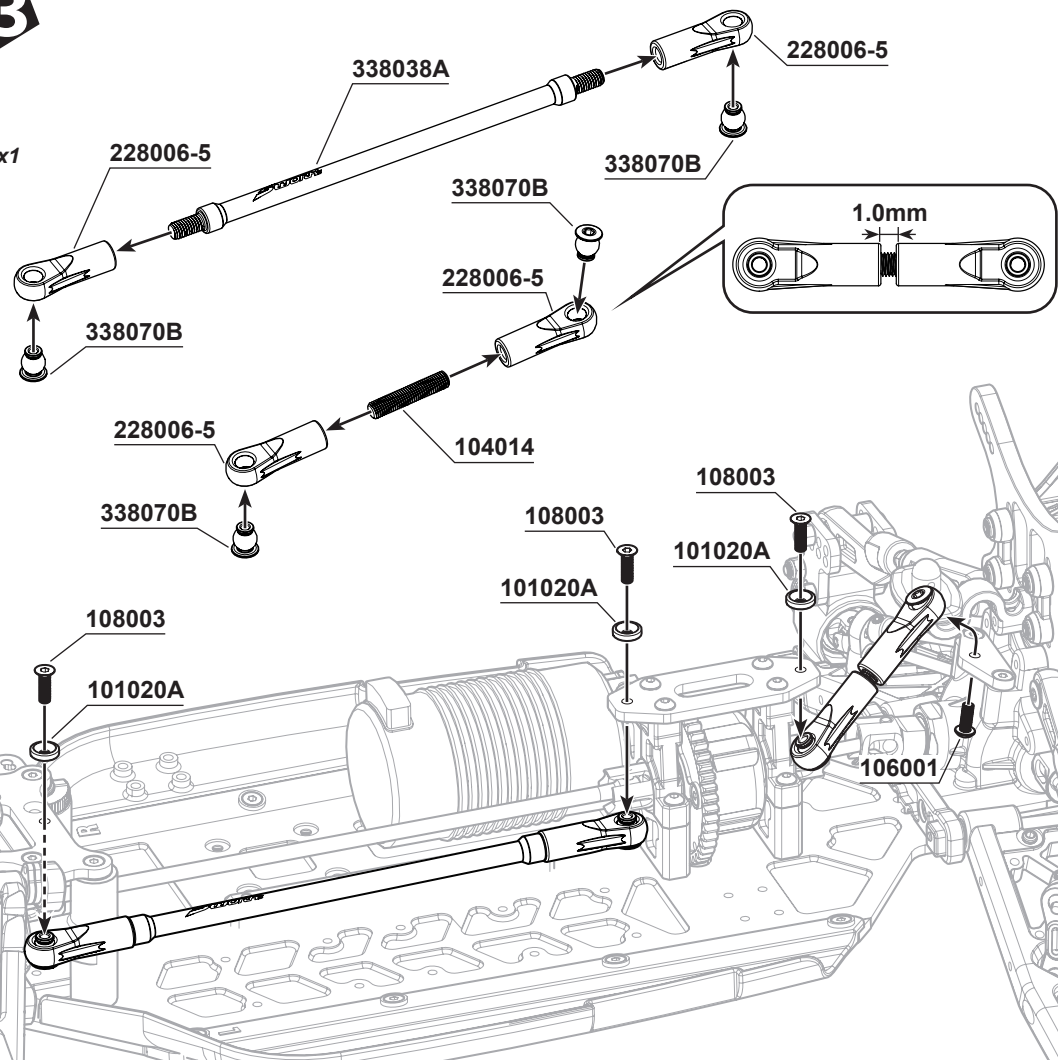

34

108006
M3x8mm FH/ST HEX Screw x8

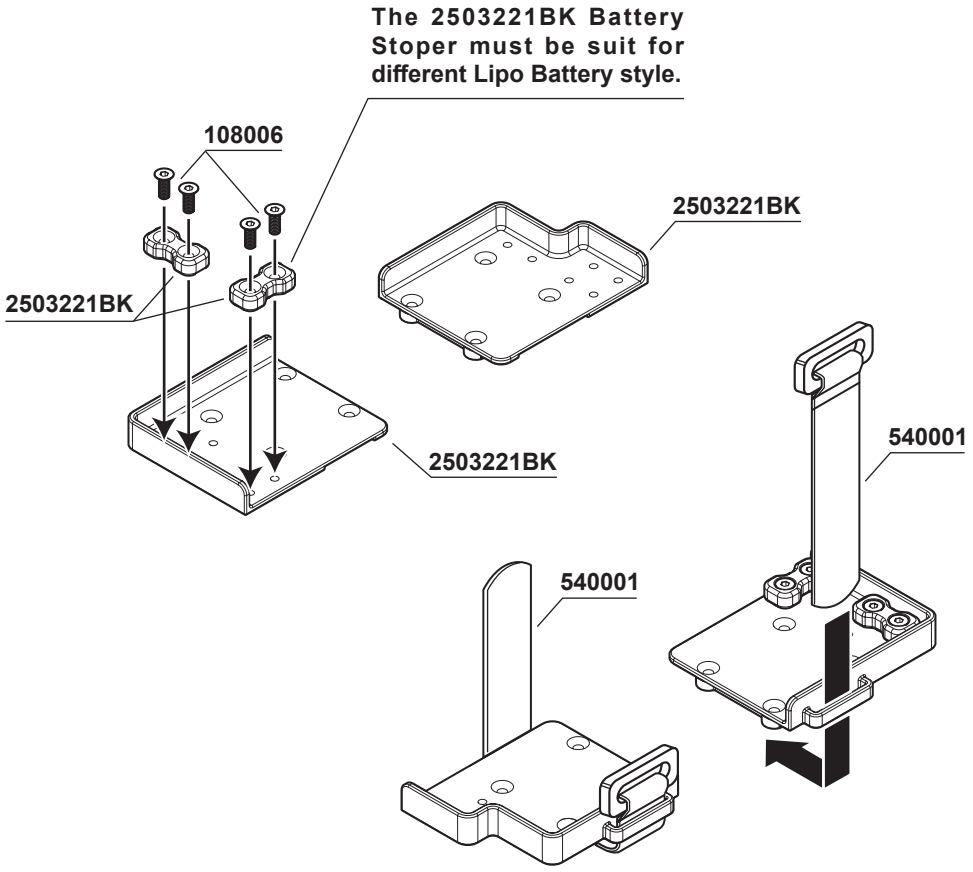

35

108006
M3x8mm FH/ST HEX Screw x8

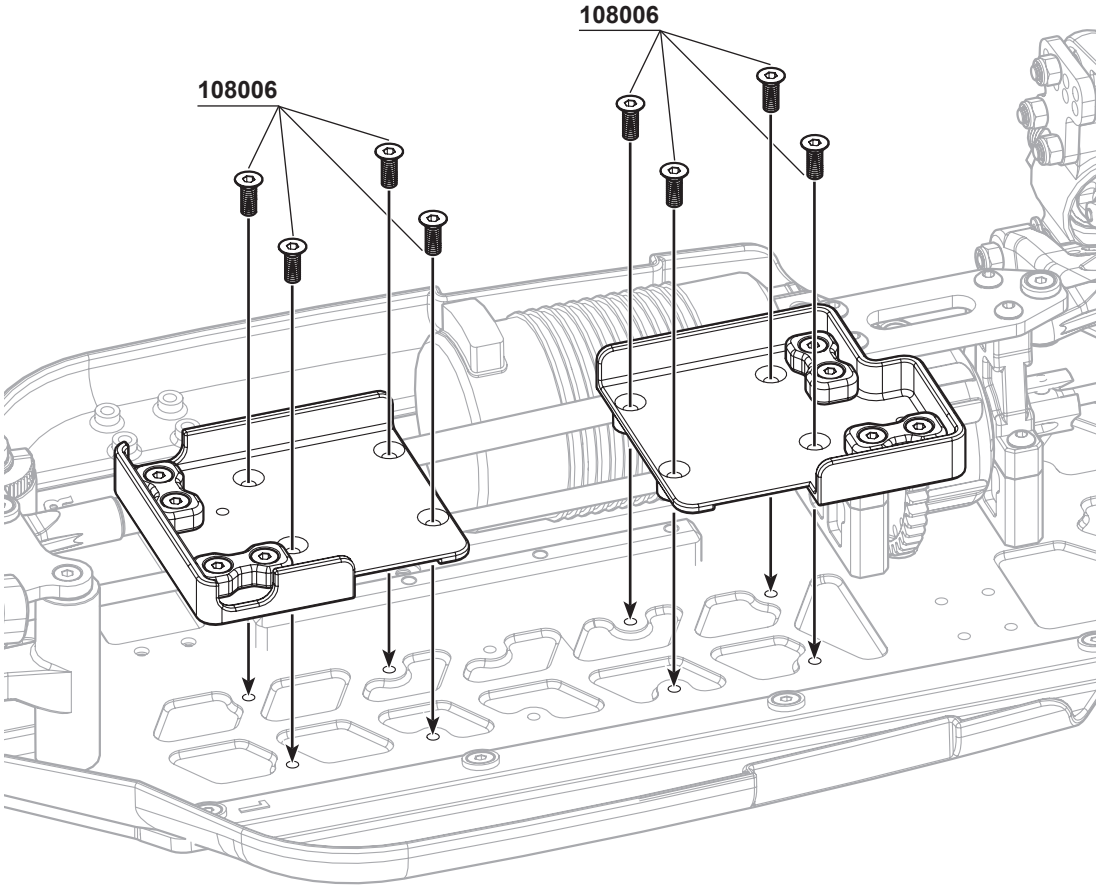

BAG F

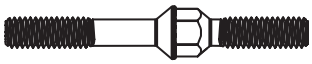

330126A
Steering Turnbuckle ***x2***

36 L R x2

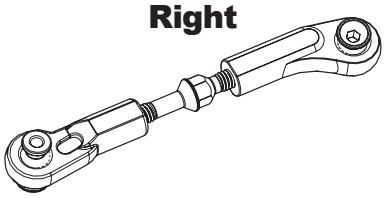

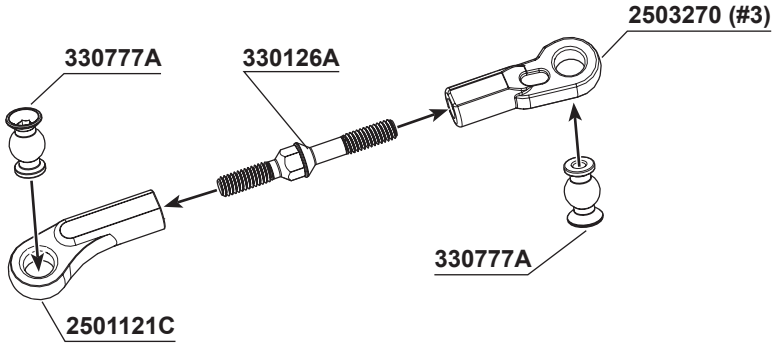

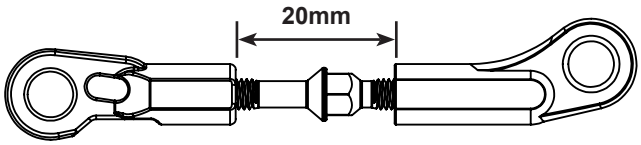

37 L R x2



106002
M3x10mm Hex Socket OH/TP Screw ***x4***

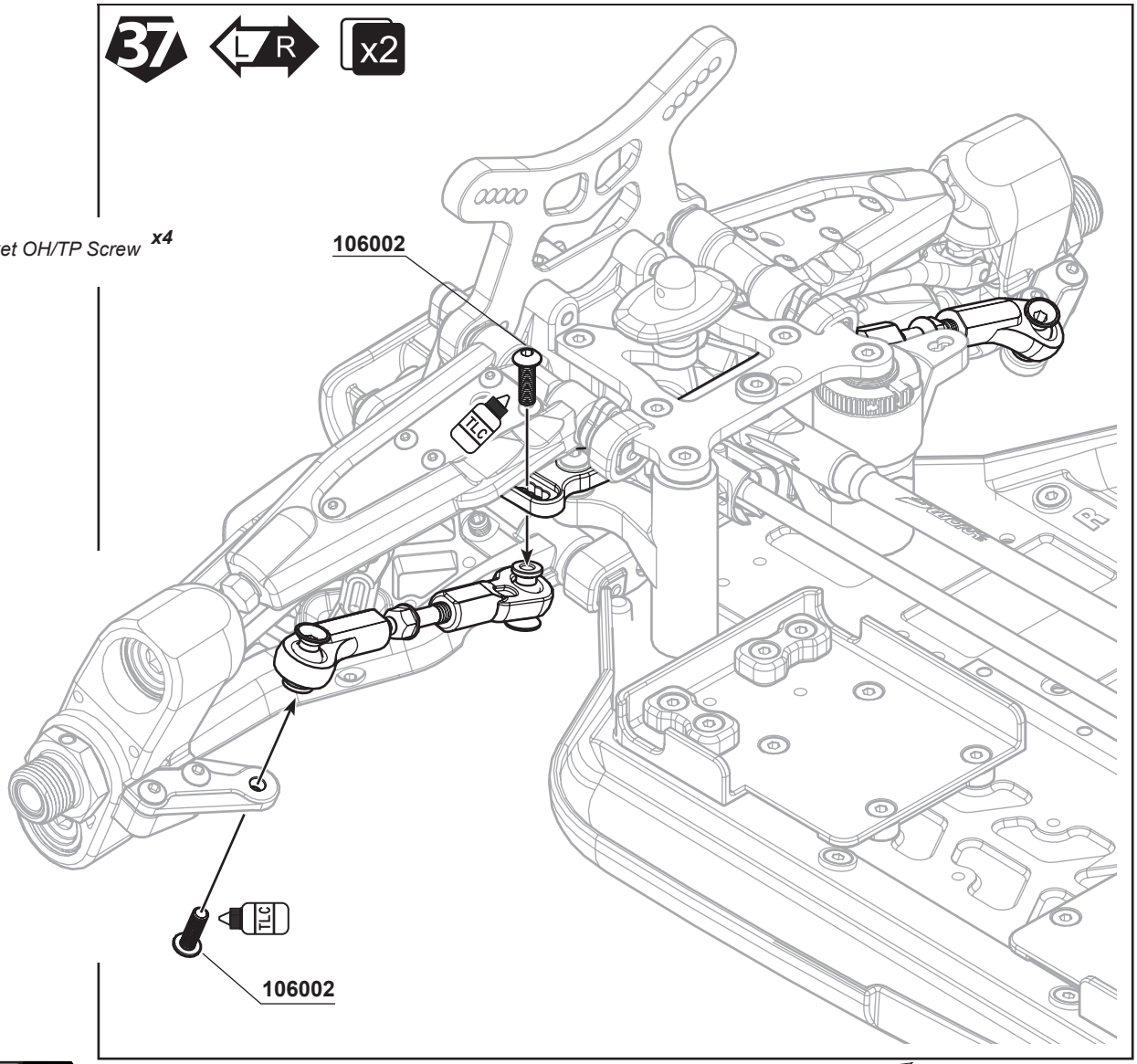

BAG F

104009
M3x16mm Set Screw ***x1***

106008
M3x12mm Hex Socket OH/TP Screw ***x4***

108006
M3x8mm FH/ST HEX Screw ***x1***

108003
M3x10mm FH/ST ***x1***

101012
M3x6xT0.6mm ***x4***

38

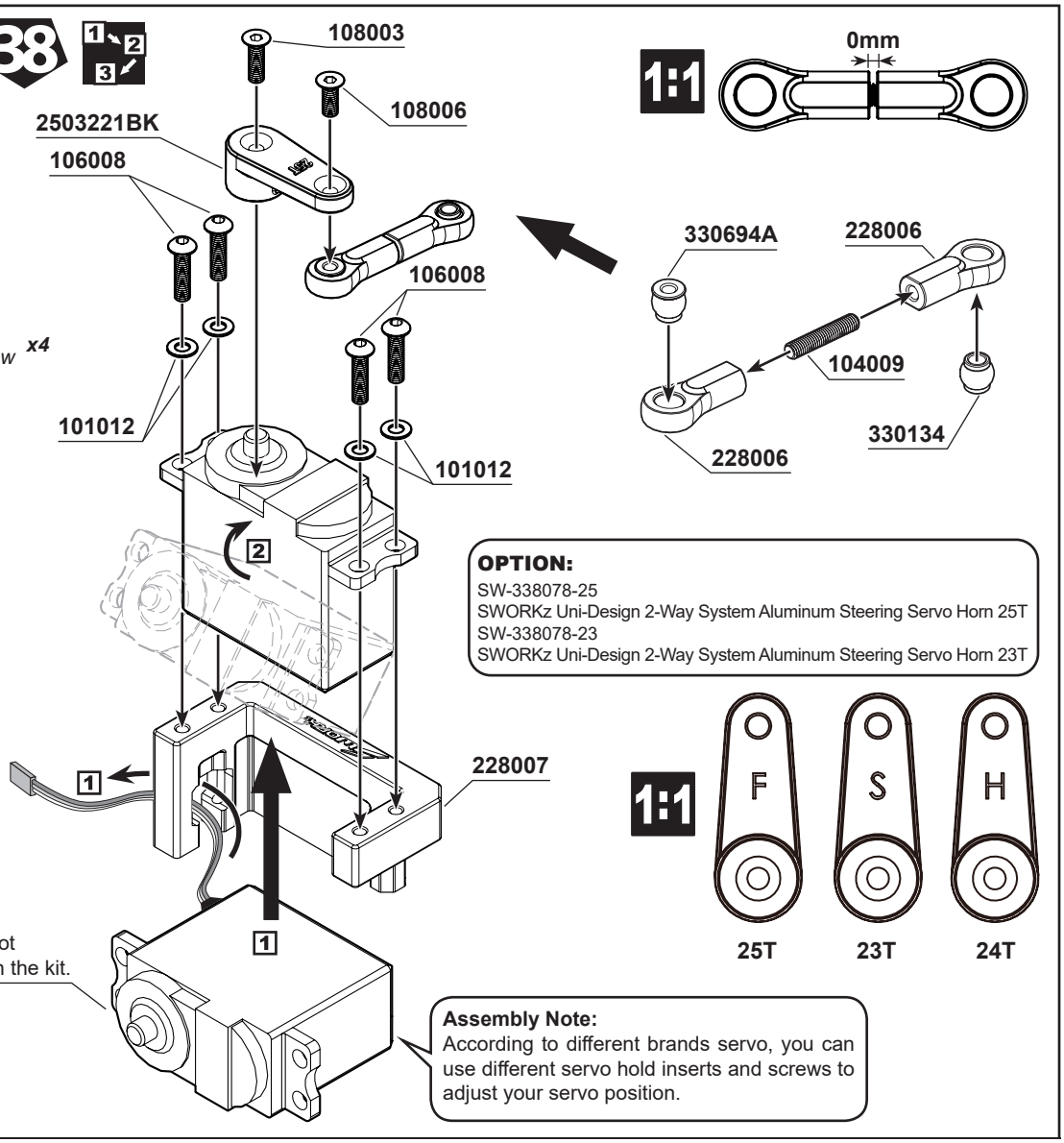

108003
M3x10mm FH/ST ***x3***

106008
M3x12mm Hex Socket OH/TP Screw ***x1***

103001
M3xNut Lock ***x1***

39

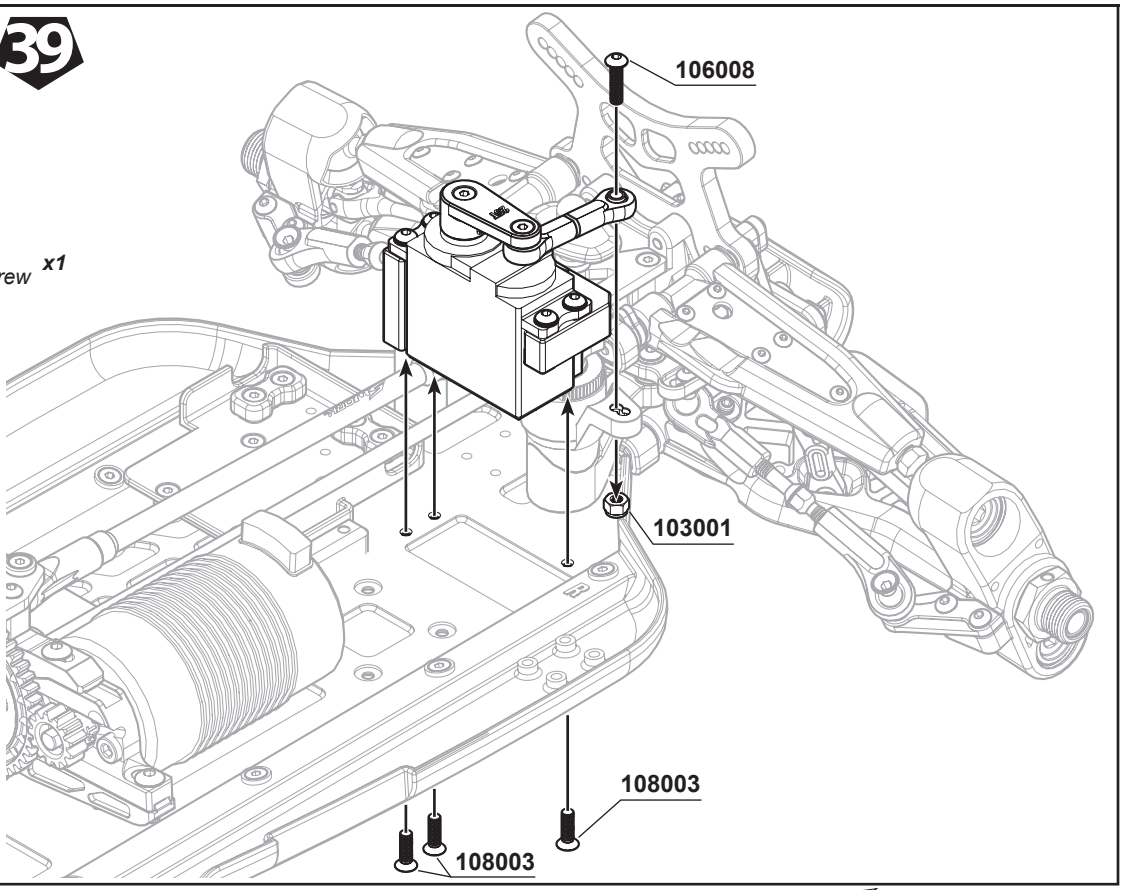

BAG F

108003
M3x10mm FH/ST ***x4***

40

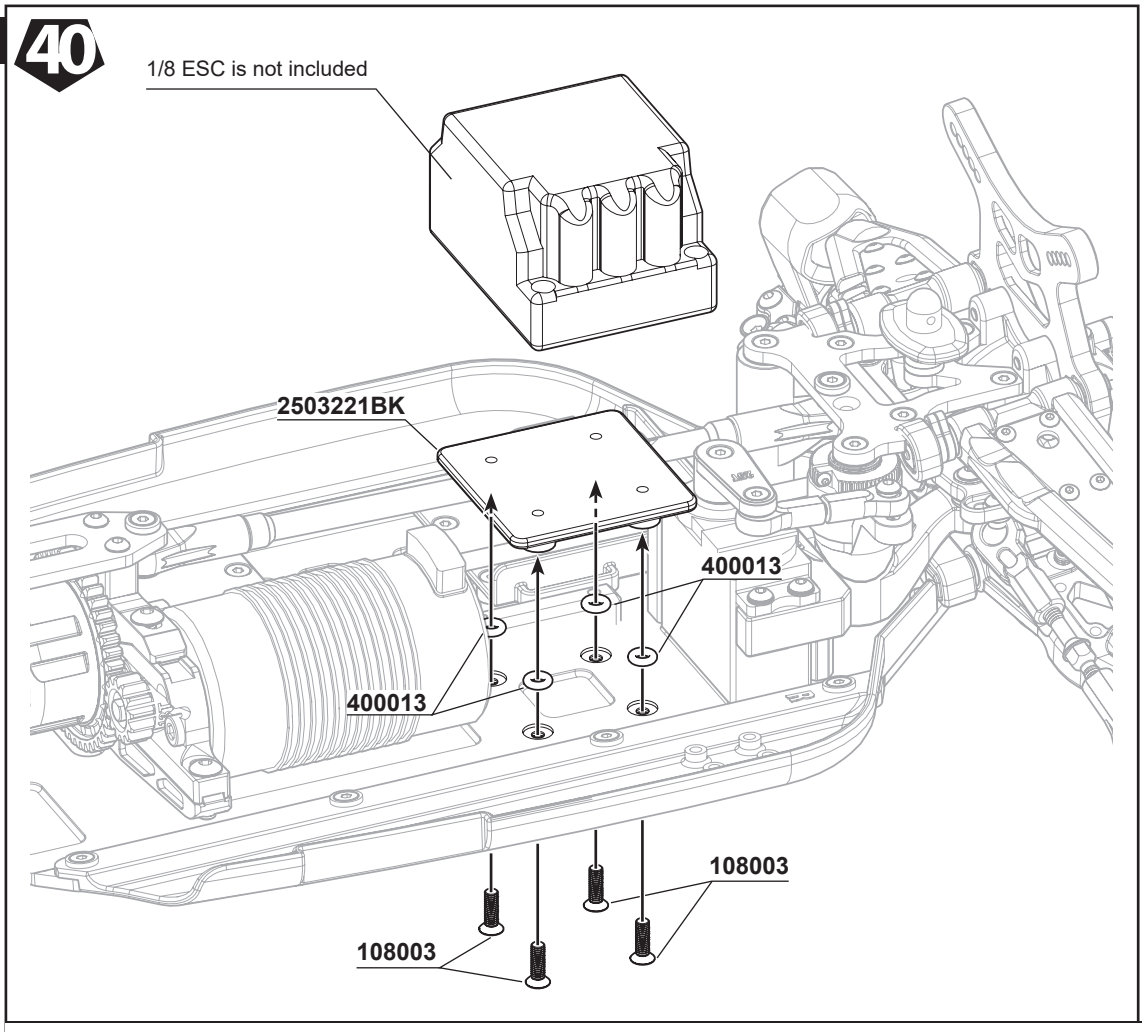

106010
M3x6mm Hex Socket OH/TP Screw ***x4***

108007
M3x6mm FH/ST HEX Screw ***x4***

41

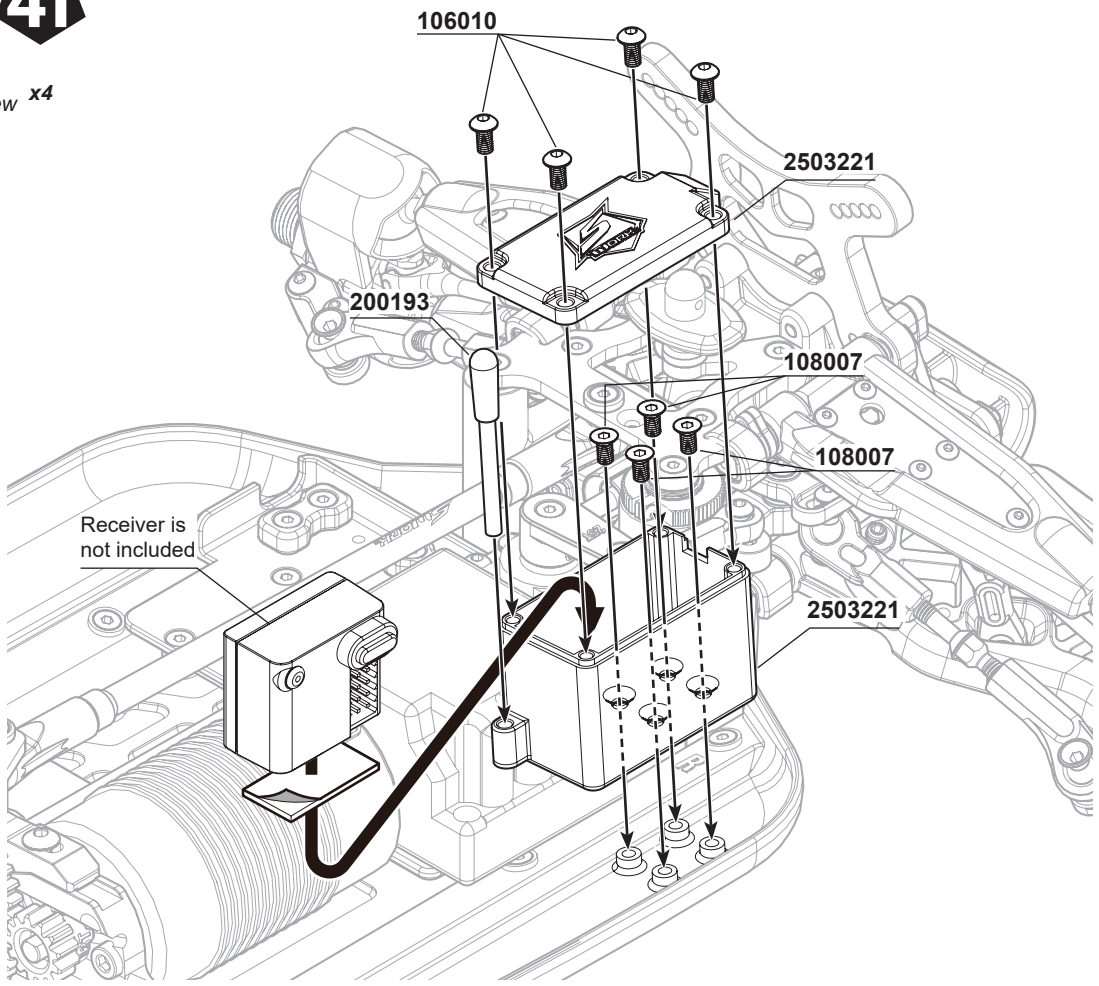

BAG J

42

F R

x2 For Front

x2 For Rear

338062
S35-4 Series BBS System Teflon Coated Shock Shaft (L) x2

338063
S35-4 Series BBS System Teflon Coated Shock Shaft (S) x2

103004
M2.5mm Nut Lock x4

210058
Shock Seal Washer 3.5X7X1.0mm x4

210058
Shock Seal Washer 3.6X7X2.5mm x8

101011
M2.6x6xT0.6mm x4

210058
Shock Seal O-Ring x8

400020
Shock Seal O-Ring x4

400019
Shock Spring Adjust Nut O-Ring x4

108029
M2.0x4.6mm FH/ST HEX Screw (1.5mm HexHead) x4

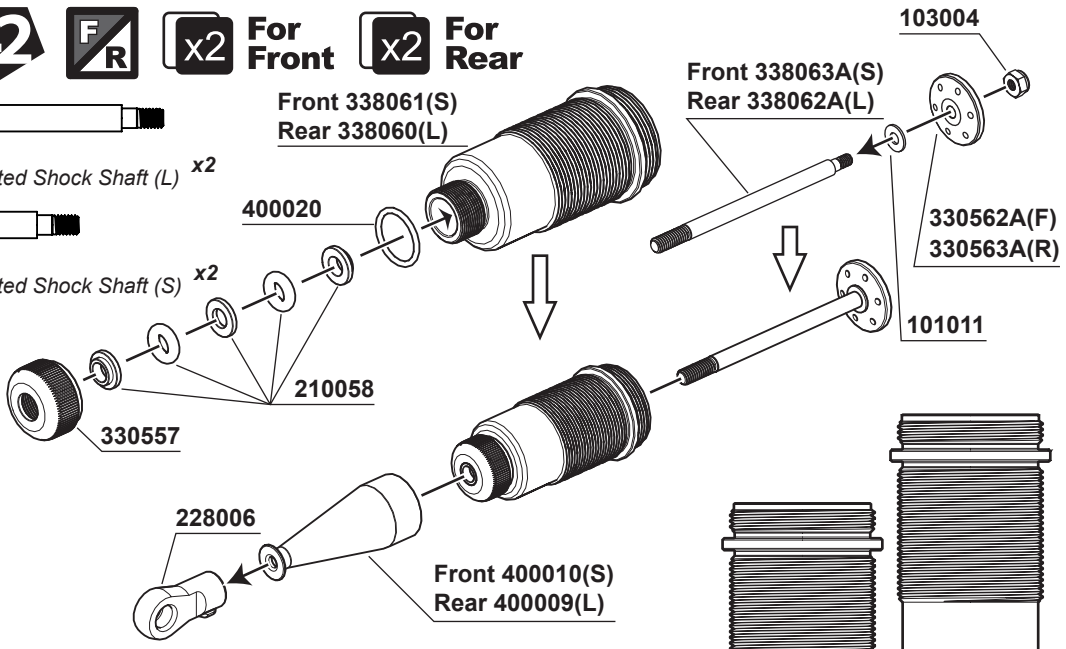

43

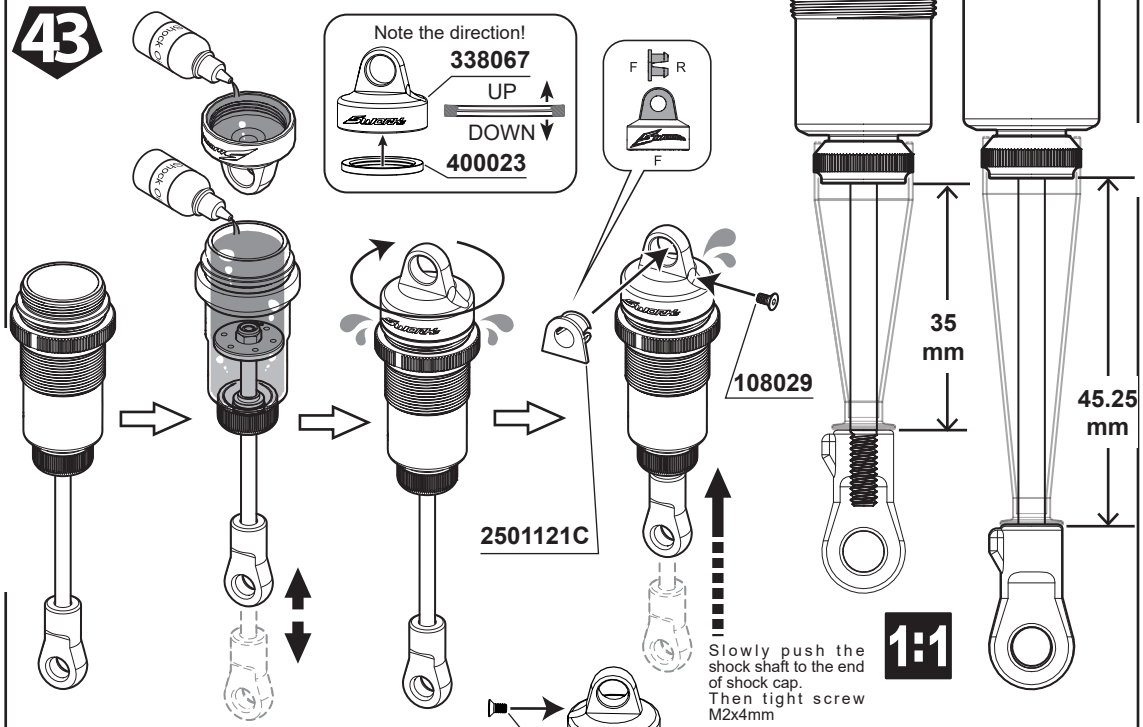

Emulsion shock cap system assembly note ↑

Standard bladder shock cap assembly note ↓

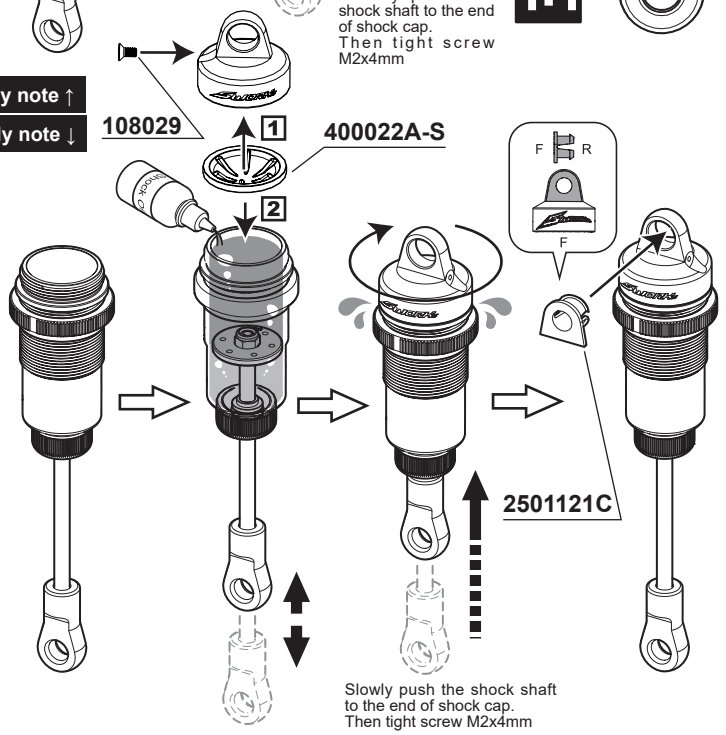

44

F/R x2 For Front x2 For Rear



115183
S35-4 Black Competition Front Shock Spring (US3-Dot)(62X1.6X7.75) ***x2***

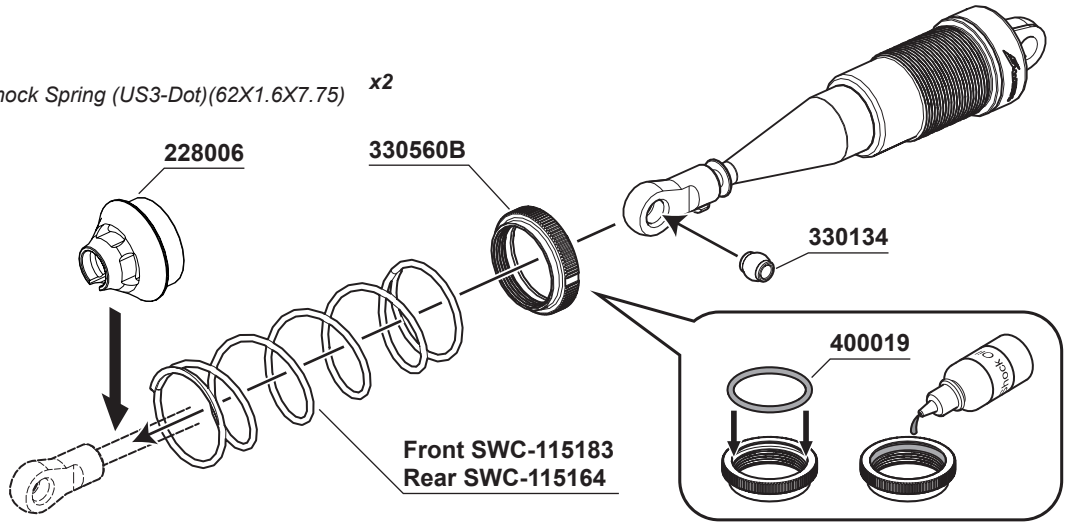



115164
S35 Series Black Competition Front Shock Spring (M3-Dot)(75X1.6X9.0) ***x2***

BAG J

45



105006A
M3x28mm Cap Screw ***x2***



105013A
M3x25mm Cap Screw ***x2***

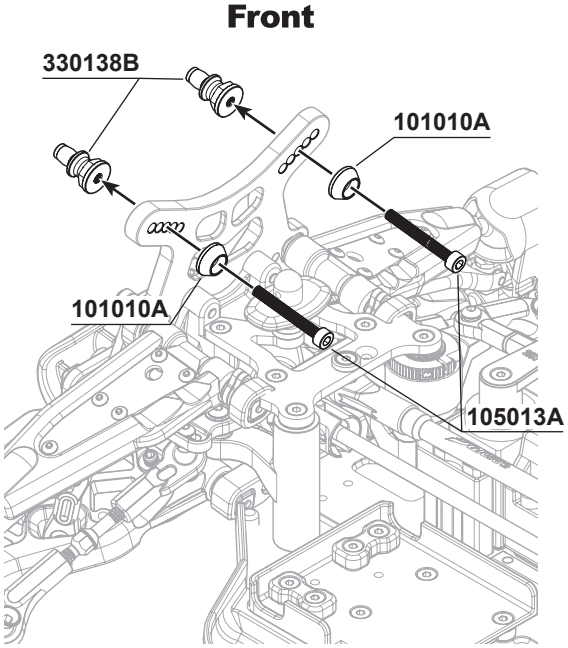

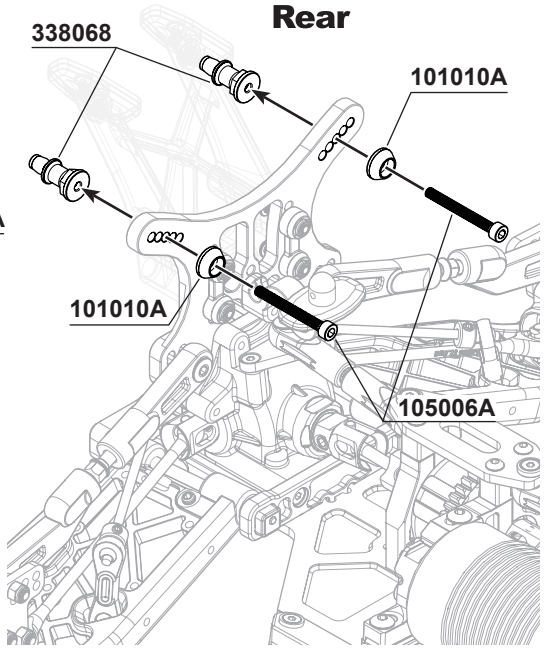



103003A
Flange M3 Nut Lock ***x4***



106003
M3x16mm Hex Socket OH/TP Screw ***x4***

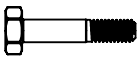

330243
SWORKz 3x16mm Shock Hex Screw Clockwise ***x2***

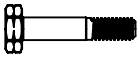

330243
SWORKz 3x16mm Shock Hex Screw Anti-Clockwise ***x2***

46

Front

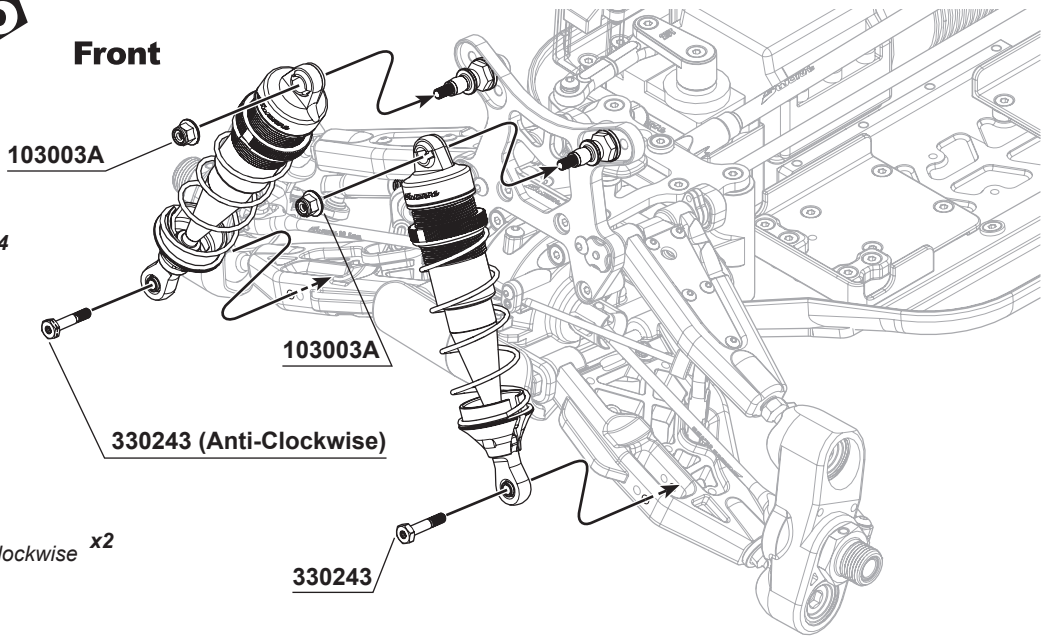

Rear

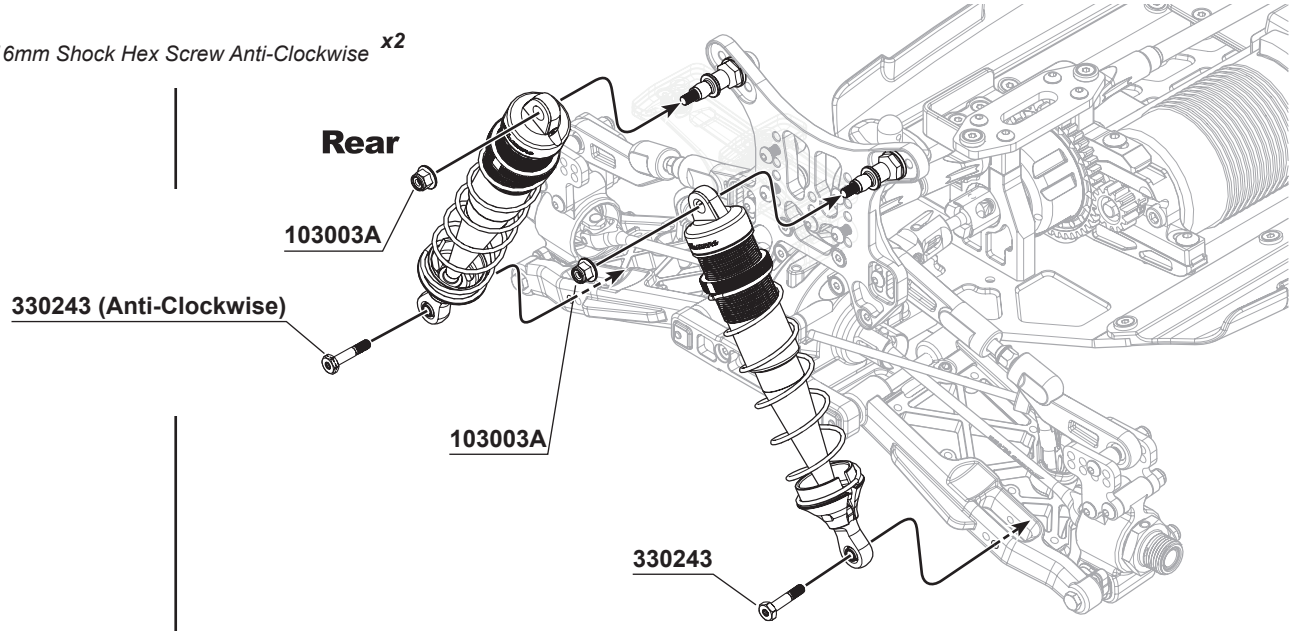

BAG E



105005
M3x12mm Cap Screw ***x2***



106025
M2.5x8mm Hex Socket OH/TP Screw ***x5***

47

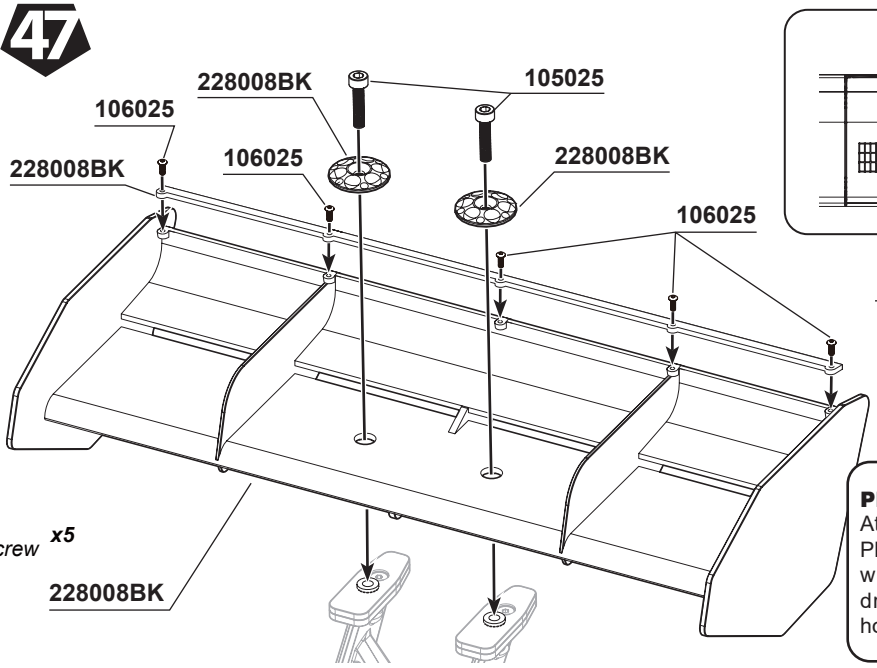

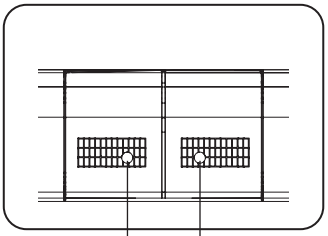

PRO TIP:
Attention!
Please do not follow the wing hole markings to drill. Please drill both holes 0.5mm inwards.

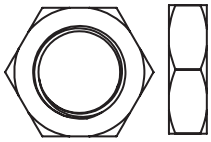

330122A *x4*
Wheel Nut

48 L R

BAG N

49

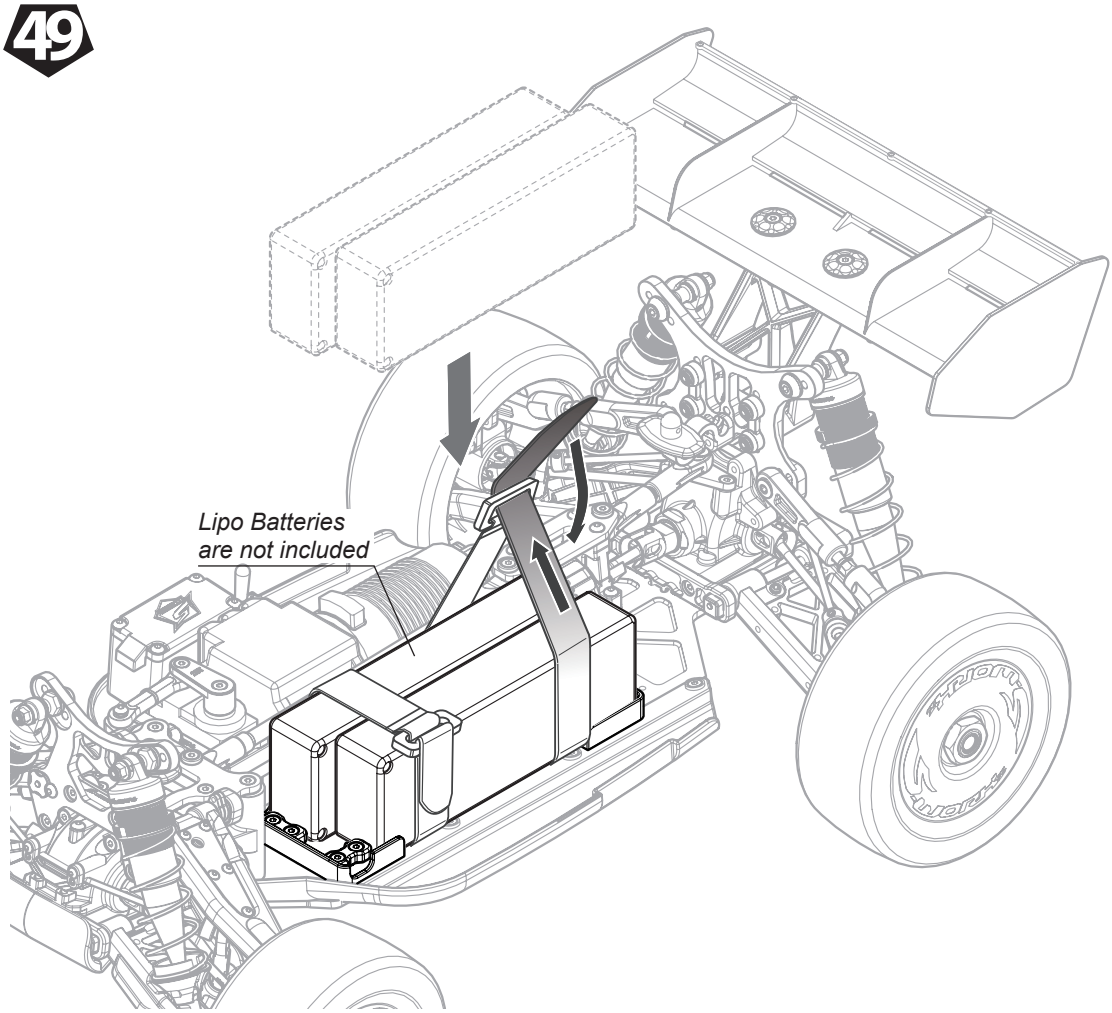

50

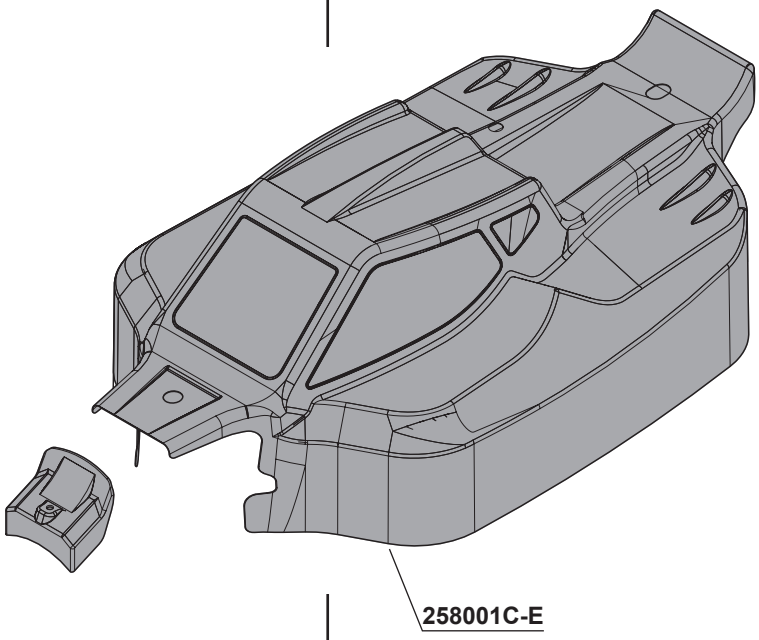

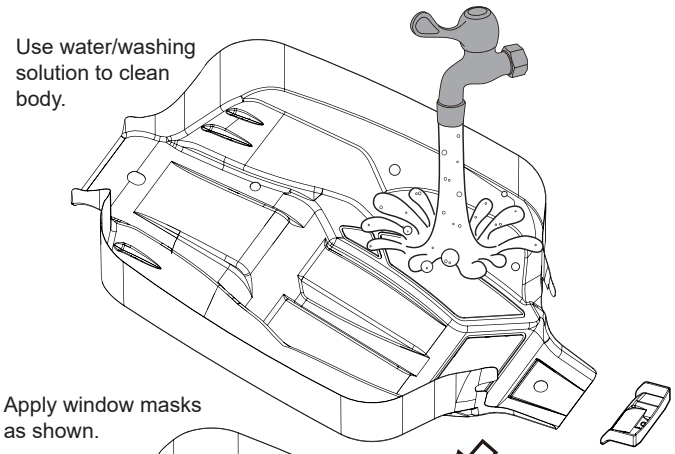

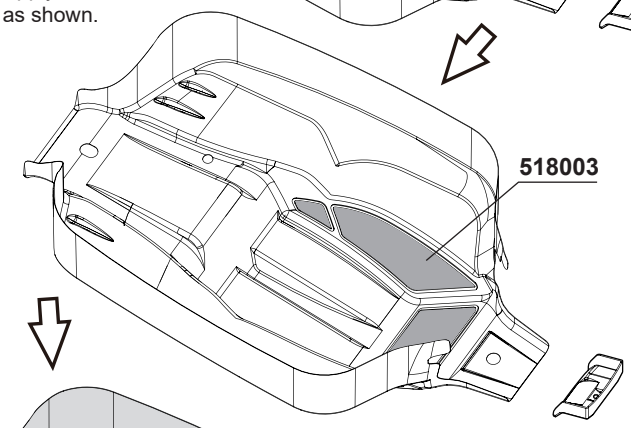

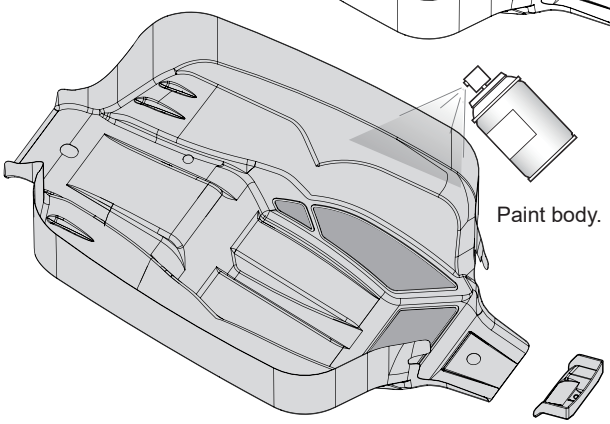

51



106010
Button Head Screw M3x6mm ***x1***

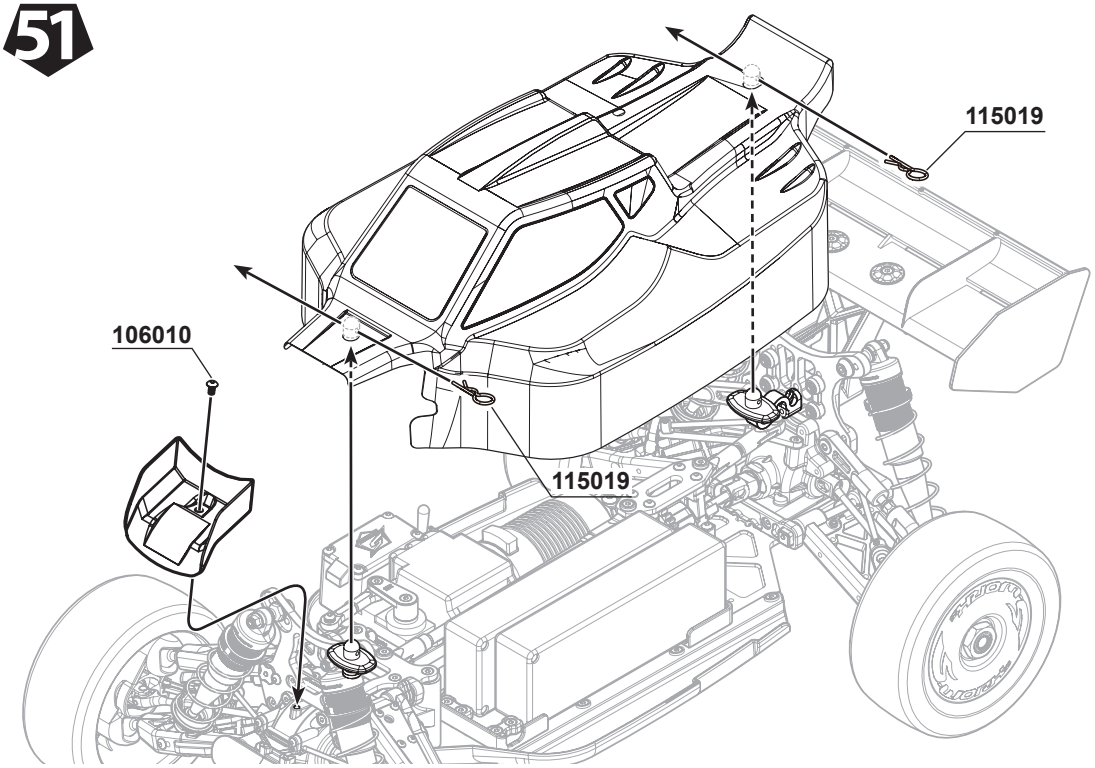

S35-4E SWORKZ

1/8 Off Road Brushless Power Pro Buggy

www.sworkz.com

SET-UP SHEET

Race time / Lap: _____

Best lap: _____

Name: Juan Canas Carlos
Date: 28-06-2020
Track: EL ESTRECHO

Diff. Oil

Front: #20K
Center: #15K
Rear: #5K

Track Conditions

Size:	☑ Open	☐ Med.	☐ Tight
Traction:	☑ High	☐ Med.	☐ Low
Surface:	☐ Smooth	☑ Med.	☐ Bumpy

Tire

Front		Rear	
Type:	BANDIT	Type:	21/40
Foam:	RED	Foam:	RED

Electric System

ESC Type: Maclan MAX8
Motor Type: MR8.3 2100KV
Motor Gear/Spur Gear: 16/46
Battery Type A: Standard Pack 7200mah
B: Shorty Pack RC-PROSTYLE

Front Suspension

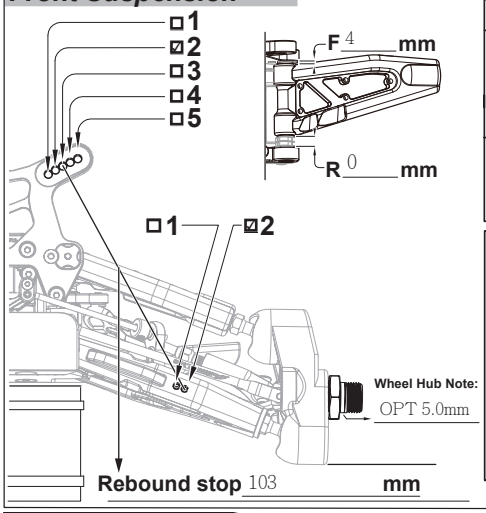

Front Toe-In

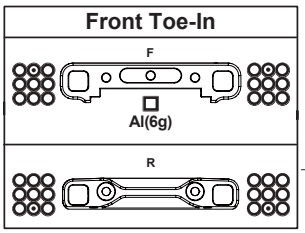

Front Roll Center

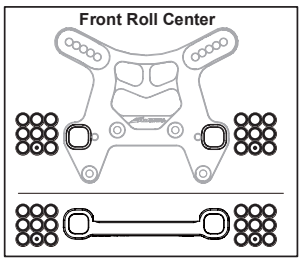

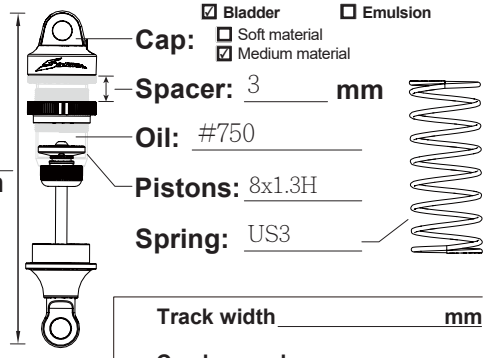

☑ Bladder ☐ Emulsion

Cap: ☐ Soft material ☑ Medium material
Spacer: 3 mm
Oil: #750
Pistons: 8x1.3H
Spring: US3

Track width _____ mm
Camber angle Upper _____ mm
Lower _____ mm
Toe angle 2 °
Sway bar ☑Use 2.5 mm ☐None

Camber Angle
L: 1 °
R: 1 °

Steening Ackerman

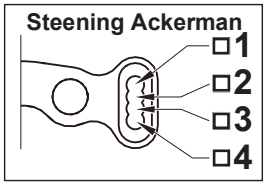

0 mm

Front Ride Height
Chassis
24 mm
Ground

Notes:
SW-218011 Hex-Cell Shock Cap System

Rear Suspension

Rear Toe-In

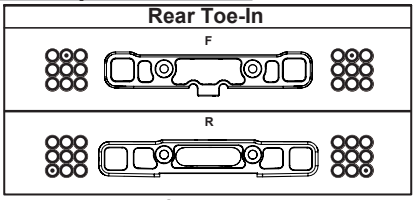

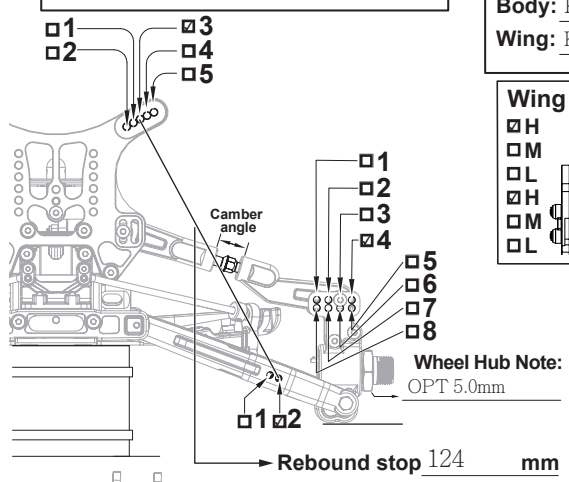

Body: Kit Type
Wing: Kit Type

Wing Position

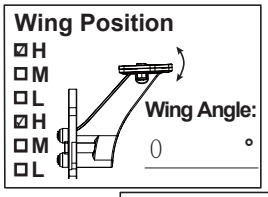

Upper arm position

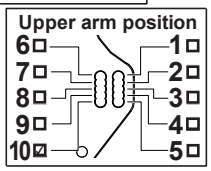

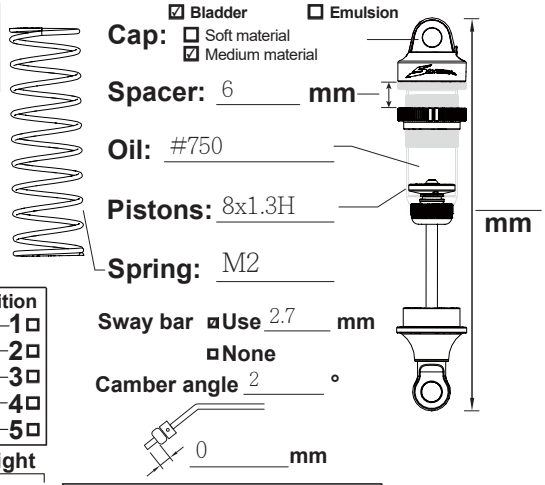

☑ Bladder ☐ Emulsion

Cap: ☐ Soft material ☑ Medium material
Spacer: 6 mm
Oil: #750
Pistons: 8x1.3H
Spring: M2

Sway bar ☑Use 2.7 mm ☐None
Camber angle 2 °

0 mm

Rear Ride Height
Chassis
27 mm
Ground

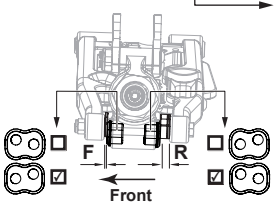

Wheelbase adjustment
F 5 mm
R 0 mm

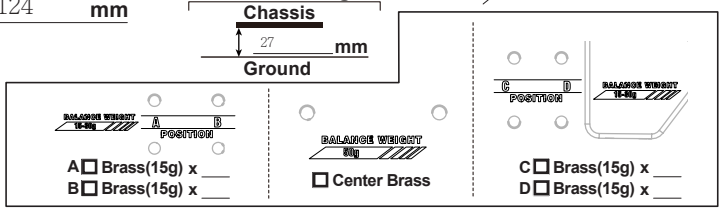

A☐ Brass(15g) x ___
B☐ Brass(15g) x ___
☐ Center Brass
C☐ Brass(15g) x ___
D☐ Brass(15g) x ___

Notes:

Option Parts List

Front Upper Arm
☐Hard ☑Soft

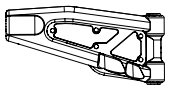

Carbon Cover 1.0 mm

Front Lower Arm
☐Hard ☐Medium ☑Soft

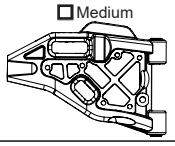

Carbon Cover _____ mm

Rear Lower Arm
☐Hard ☐Medium ☑Soft

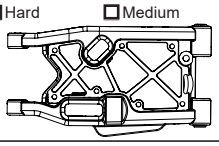

Carbon Cover 1.0 mm

S35-4E SET-UP SHEET

1/8 Off Road Brushless Power Pro Buggy

SWORKZ www.sworkz.com

Race time / Lap: _____

Best lap: _____

Name: _____

Date: _____

Track: _____

Diff. Oil

Front: _____

Center: _____

Rear: _____

Track Conditions

Size: □ Open □ Med. □ Tight

Traction: □ High □ Med. □ Low

Surface: □ Smooth □ Med. □ Bumpy

Tire

Front	Rear
Type: _____	Type: _____
Foam: _____	Foam: _____

Electric System

ESC Type: _____

Motor Type: _____

Motor Gear/Spur Gear: _____

Battery Type

A: Standard Pack _____

B: Shorty Pack _____

Front Suspension

□1 □2 □3 □4 □5

F ____ mm

R ____ mm

□1 □2

Rebound stop _____ mm

Wheel Hub Note: _____

Front Toe-In

F

□ Al(6g)

R

mm

Front Roll Center

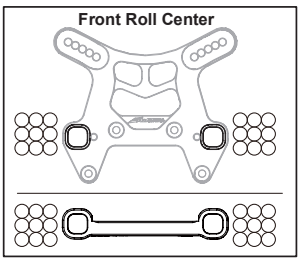

□ Bladder □ Emulsion

Cap: □ Soft material □ Medium material

Spacer: _____ mm

Oil: _____

Pistons: _____

Spring: _____

Track width _____ mm

Camber angle Upper _____ mm

Lower _____ mm

Toe angle _____ °

Sway bar □Use _____ mm

□None

Camber Angle

L: _____ °

R: _____ °

_____ mm

Notes: _____

Front Ride Height

Chassis

_____ mm

Ground

Steering Ackerman

□1 □2 □3 □4

Rear Suspension

Rear Toe-In

F

R

□1 □2 □3 □4 □5

Camber angle

□1 □2 □3 □4 □5 □6 □7 □8

□1 □2

Wheel Hub Note: _____

Rebound stop _____ mm

Body: _____

Wing: _____

Wing Position

□H □M □L □H □M □L

Wing Angle: _____ °

Upper arm position

6 7 8 9 10 — 1 2 3 4 5

Rear Ride Height

Chassis

_____ mm

Ground

□ Bladder □ Emulsion

Cap: □ Soft material □ Medium material

Spacer: _____ mm

Oil: _____

Pistons: _____

Spring: _____

mm

Sway bar □Use _____ mm

□None

Camber angle _____ °

_____ mm

Wheelbase adjustment

F ____ mm

R ____ mm

F R

Front

BALANCE WEIGHT 10-30g

A B POSITION

A □ Brass(15g) x ___

B □ Brass(15g) x ___

BALANCE WEIGHT 60g

□ Center Brass

C D POSITION

BALANCE WEIGHT 10-30g

C □ Brass(15g) x ___

D □ Brass(15g) x ___

Notes: _____

Option Parts List

Front Upper Arm

□ Hard □ Soft

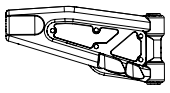

Carbon Cover

_____ mm

Front Lower Arm

□ Hard □ Medium □ Soft

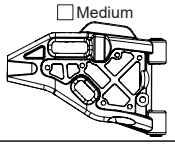

Carbon Cover

_____ mm

Rear Lower Arm

□ Hard □ Medium □ Soft

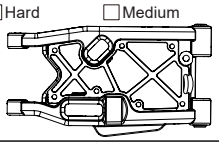

Carbon Cover

_____ mm

S35-4E

1/8 Off Road Brushless Power Pro Buggy

SWORKZ www.sworkz.com

SET-UP SHEET

Race time / Lap: _____

Best lap: _____

Name: _____

Date: _____

Track: _____

Diff. Oil

Front: _____

Center: _____

Rear: _____

Track Conditions

Size: □ Open □ Med. □ Tight

Traction: □ High □ Med. □ Low

Surface: □ Smooth □ Med. □ Bumpy

Tire

Front	Rear
Type: _____	Type: _____
Foam: _____	Foam: _____

Electric System

ESC Type: _____

Motor Type: _____

Motor Gear/Spur Gear: _____

Battery Type

A: Standard Pack _____

B: Shorty Pack _____

Front Suspension

□1 □2 □3 □4 □5

F ____ mm

R ____ mm

□1 □2

Rebound stop _____ mm

Wheel Hub Note: _____

Front Toe-In

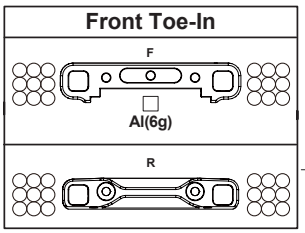

mm

Front Roll Center

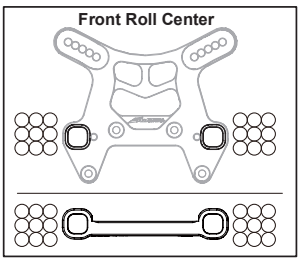

□ Bladder □ Emulsion

Cap: □ Soft material □ Medium material

Spacer: _____ mm

Oil: _____

Pistons: _____

Spring: _____

Track width _____ mm

Camber angle Upper _____ mm

Lower _____ mm

Toe angle _____ °

Sway bar □Use _____ mm

□None

Camber Angle

L: _____ °

R: _____ °

_____ mm

Notes: _____

Front Ride Height

Chassis

_____ mm

Ground

Rear Suspension

Rear Toe-In

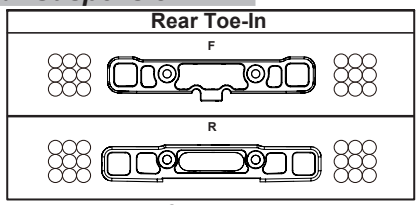

□1 □2 □3 □4 □5

Camber angle

□1 □2 □3 □4 □5 □6 □7 □8

□1 □2

Wheel Hub Note: _____

Rebound stop _____ mm

Steering Ackerman

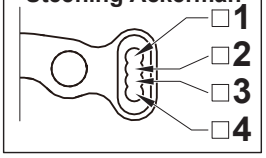

Body: _____

Wing: _____

Wing Position

□H □M □L □H □M □L

Wing Angle: _____ °

Upper arm position

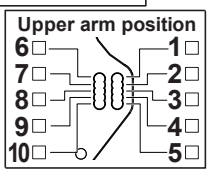

Rear Ride Height

Chassis

_____ mm

Ground

□ Bladder □ Emulsion

Cap: □ Soft material □ Medium material

Spacer: _____ mm

Oil: _____

Pistons: _____

Spring: _____

Sway bar □Use _____ mm

□None

Camber angle _____ °

_____ mm

mm

Wheelbase adjustment

F ____ mm

R ____ mm

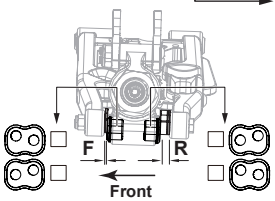

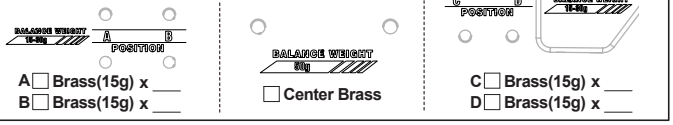

A □ Brass(15g) x ___

B □ Brass(15g) x ___

□ Center Brass

C □ Brass(15g) x ___

D □ Brass(15g) x ___

Notes: _____

Option Parts List

Front Upper Arm

□ Hard □ Soft

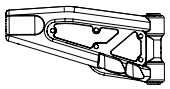

Carbon Cover

_____ mm

Front Lower Arm

□ Hard □ Medium □ Soft

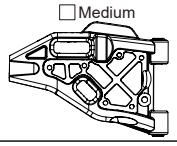

Carbon Cover

_____ mm

Rear Lower Arm

□ Hard □ Medium □ Soft

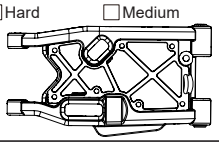

Carbon Cover

_____ mm

Parts No. List

Part No.	Part Name	Q`ty in Use	Item No.
210091	S35-3W Plastic Front/Rear Big Bore Diff Case	2	SW-210091
210079A	S35-4 Plastic Center Big Bore HET Diff Case	1	SW-210079A
2501097B	S35 Series Front Bumper	1	SW-2501097B
2501121C	S35/S350 Series Ball End Set with Shock Plastic Parts	2	SW-2501121C
2501122B	S35/S350 Series Settring Bellcrank Set 2.0 Set (with Servo Horn)	1	SW-2501122B
2503221BK	S35-2E/3E Series Black Plastic Radio Box/Battery Case	1	SW-2503221BK
2503260	S353 Series Plastic Inserts Set	1	SW-2503260
2503261A	S35-3/GT Series Gear Box Set (Fit 5x13x4mm Ball Bearing)	2	SW-2503261A
2503264A	S35-3 Series Front Steering Knuckle (Type 2.0) L	1	SW-2503264A
2503270-1	S35-3 Series Front Upper Arms	2	SW-2503270-1
2503270-2	S35-3 Series Rear Upper Arm Outside Ball Ends	4	SW-2503270-2
2503270-3	S35-3 Series Front Steering Ball Ends	2	SW-2503270-3
228001	S35-4 Series Plastic Inserts Set	2	SW-228001
228002-1	S35-4 Series Plastic Rear Wheel Hub (R=L)	2	SW-228002-1
228003A	S35 Series Integrated Wing Mount Set 2.0	1	SW-228003A
228004	S35-4 Series Plastic Side Guard Set	1	SW-228004
228005S-F	S35-4 Series Front Lower Arm in Soft Material	2	SW-228005S-F
228005S-R	S35-4 Series Rear Lower Arm in Soft Material	2	SW-228005S-R
228006	S35 Series Shock End/Body Mount/Ball Ends Set	2	SW-228006
228007	S35-4E Buggy Series Steering Servo Mount/Center Diff Mount Plastic Parts	1	SW-228007
228008BK	SWORKz 1/8 Off Road Formula 2.0 Race Wing (BK)	1	SW-228008BK
210058	S350 New BBS System Shock Seal Washer 3.6X7X2.5mm	8	SW-210058
210058	S350 New BBS System Shock Seal Washer 3.5X7X1.0mm	4	SW-210058
210046	S350 Series LDS Universal Cross Drive Shaft Set 92.5mm (1pc)	4	SW-210046
200193	Antenna Tube	1	SW-200193
258001C-E	S35 Series Falcon ST-4 Clean Body Shell (Pre-Cut for EP Buggy)	1	SW-258001C-E
328001	S35-3W Diff. Bevel Gear 20T	6	SW-328001
328001	S35-3W Diff. Bevel Gear 10T	12	SW-328001
330015	Pin M2.2x9.9mm	6	SW-330015
330114A	S350 Sseries Servo Saver Post (HC)	1	SW-330114A
330117A	S350 Series Knuckle Pivot Ball Washer (GM)	2	SW-330117A
330118A	S350 Series Knuckle Pivot Ball Nut(GM)	4	SW-330118A
330119	Front Upper Arm HingePin	2	SW-330119
330121B	S350 Wheel Hub (L4.5mm) (HC)	4	SW-330121B
330122A	S350 Wheel Nut (HC)	4	SW-330122A
330123A	S350 EVO Rear Upper Sus. Arm Turnbuckles M5x38mm	2	SW-330123A
330124	Pin M3.0x16.8mm	4	SW-330124
330125	Rear Upper Sus. Arm Ball Stud	2	SW-330125
330126A	S350 EVO Steering Turnbuckle M4x40mm	2	SW-330126A
330134	Shock Ball Stud	9	SW-330134
330136	Sway Bar Ball Stud	4	SW-330136
330138B	S350 EVO Aluminum Shock Cap Stud (-1.3mm)	2	SW-330138B
330243	SWORKz 3x16mm Shock Hex Screw Clockwise	2	SW-330243
330244	SWORKz 3x16mm Shock Hex Screw Anti-Clockwise	2	SW-330243
330245	BE1 Motor Gear 15T	1	SW-330245
330252	S350 BX1/BR1 Steering Knuckle Pivot Ball Turnbuckle	4	SW-330252
330557	S350 New BBS System Shock Seal Cap (GM)	4	SW-330557
330560B	S35 New BBS System Shock Spring Adjust Nut (BK)	4	SW-330560B
330661A	S35-T/S35 Series Competition Center Drive Join (5mm set screw)	2	SW-330661A
330562A	S350 New BBS System Shock Piston 1.3mmX6 Holes (BK)	2	SW-330562A
330563A	S350 New BBS System Shock Piston 1.4mmX6 Holes (BK)	2	SW-330563A
330694A	S35 E Series 6mm Steel Ball Stud	1	SW-330694A
330697	S35-2E Center Rear Drive Shaft (S)	1	SW-330697
330699B	S35-2E/3E Center Main Drive Shaft (L)	1	SW-330699B
330777A	S35-4 Series Steering Linkage Ball Stud 7mm (L7)	4	SW-330777A
330782	S35-3 Series Rear Hub Carriers Hinge Pin	2	SW-330782
338011	S35 series Pinion Gear Stopper (5x7x5.1mm)	2	SW-338011
338014	S35-3W T-7075AL Rear Lower Fully Adjustable Toe-In Block (3 degree)	1	SW-338014
338023	S35-3W Pinion Gear 13T	2	SW-338023
338024	S35-3W Crown Gear 43T	2	SW-338024
338025	S35-3W Bevel Gear Shaft	6	SW-338025
338027	S35-3W Front/Rear Diff. Outdrive	4	SW-338027
338028	S35-3W Center Diff. Outdrive	2	SW-338028
338038A	S35-3E/S35-2E/Apollo Series Roll Bar Brace	1	SW-338038A
338039	S35-3/4 Series Center HET Spur Gear (46T)	1	SW-338039
338043	S35-3/4 Series Servo Saver Nut with Screw Fixed	1	SW-338043
338048	S35-4 Series Servo Saver Shaft	2	SW-338048
338049	S35-4 Series T7 Aluminum Rear Front Lower Suspension Plate (RF)	1	SW-338049
338050	S35-4 Series T7 Aluminum Rear Shock Tower	1	SW-338050
338051	S35-4 Series T7 Aluminum Steering Knuckle Plate (R=L)	2	SW-338051
338052	S35-4 Series T7 Aluminum Settring Bellcrank Upper Part-A (with 2Hole)	1	SW-338052
338053	S35-4 Series T7 Aluminum Steering Plate	1	SW-338053
338054	S35-4 Series T7 Aluminum Front Shock Tower	1	SW-338054
338056	S35-4 Series Lower Arm Hinge Pin (68.5mm)	4	SW-338056
338057	S35-4 Series T7 Aluminum Front Upper Arm Holder	1	SW-338057

Part No.	Part Name	Q`ty in Use	Item No.
338058	S35-4 Series T7 Aluminum Front Lower Arm Plate (FF)	1	SW-338058
338059	S35-4 Series T7 Aluminum Front Lower Arm Holder (FR)	1	SW-338059
338060	S35-4 Series BBS System Shock Body (L)	2	SW-338060
338061	S35-4 Series BBS System Shock Body (S)	2	SW-338061
338062A	S35-4 Series BBS System Teflon Coated Durable Shock Shaft (L)	2	SW-338062
338063A	S35-4 Series BBS System Teflon Coated Durable Shock Shaft (S)	2	SW-338063
338064A	S35-4 E-Buggy Series T7075 Aluminum Lightened Main Chassis	1	SW-338064A
338065	S35-4 E-Buggy Series T7 Aluminum Motor Mount	1	SW-338065
338066	S35-4 E-Buggy Series T7 Aluminum Center Diff Mount (CF)	1	SW-338066
338067	S35-4 Series Emulsion/Bladder 2 Ways Syatem Shock Cap	4	SW-338067
338068	S35-4 Series T7 Aluminum Shock Stud (L)	2	SW-338068
338070B	S35 Series Rear Upper Sus. Arm Ball Stud (7.0mm Hex)	2	SW-338070B
340003	S35-3 Series Pro-composite Carbon Front Upper Arm Cover Set (1mm)	2	SW-340003
340015	S35-3E/S35-2E/Apollo Series Carbon Fiber Rear Brace Mount	1	SW-340015
340016	S35-4 Series Pro-composite Carbon Rear Wheel Hub Adjust Plate (R=L)	4	SW-340016
340017	S35-4 Series Pro-composite Carbon Steering Bellcrank Plate	1	SW-340017
340018	S35-4E Series Pro-composite Carbon Center Diff. Plate	1	SW-340018
400002	O-ring S5 4.8X1.5	6	SW-400002
400005	Shock Spring Adjust Nut O-Ring	4	SW-400005
400006	shock seal O-Ring	8	SW-210058
400009	Shock Boot (L)	2	SW-400009
400010	Shock Boot (S)	2	SW-400010
400013	S104 Shock Seal O-ring 2x2.7mm	4	SW-400013
400019	S350 New BBS System Shock Spring Adjust Nut O-Ring	4	SW-400019
400020	S350 New BBS System Shock Seal O-Ring	4	SW-400020
400022A-S	S35 Series BBS System Pro Shock Bladder (Soft)	4	SW-40022A-S
400023	S35 Series BBS System Seal O-Ring for Emulsion Shock Cap	4	SW-400023
420010	Antenna Cup	1	SW-420010
510080A	SWORKz 1/8 Off Road Formula Race Wing Decal	1	SW-228008BK
510091	SWORKz Origional Logo Sticker	1	SW-510091
518002	S35-4E Body Decal Sheet	1	SW-258001C-E
518003	S35 Series Falcon ST-4 Clean Body Shell Window Mask	1	SW-258001C-E
610019	S35-3 Series Servo Saver Spring Dusty Protect Sponge	1	SW-610019
610020	S35-3 Series Center Big Bore Plastic Diff. Case Gasket	1	SW-610020
610023	S35-3W Diff. Gasket (0.4T)	2	SW-610023
115004A	Servo Saver Spring	1	SW-115004A
115005	Rear Sway Bar 2.8mm	1	SW-115005
115006	Rear Sway Bar 2.6mm	1	SW-115006
115008A	Front Sway Bar 2.3mm	1	SW-115008A
115019	Body Clip	2	SW-115019
115035A	Front Sway Bar 2.2mm	1	SW-115035A
115191	S35 Series Competition Black Line Rear Shock Spring (RM3-Dot)(80X1.6X10.0)	2	SWC-115191
115183	S35-4 Black Competition Front Shock Spring (US3-Dot)(62X1.6X7.75)	2	SWC-115183
116004R	Ball Bearing 6x10x3mm (Red Rubber Case)	4	SW-116004R
116006R	Ball Bearing 8x16x5mm (Red Rubber Case)	14	SW-116006R
116019R	Ball Bearing 5x13x4mm (Red Rubber Case)	4	SW-116019R
117003	Flange Ball Bearing 3x6x2.5mm	4	SW-117003
101004	Washer 3.5X10X0.2mm	12	SW-101004
101010A	M3 Countersunk Washer (GM)	4	SW-101010A
101011	M2.6x6xT0.6mm	4	SW-101011
101012	M3x6xT0.6mm	4	SW-101012
101018	SHIM 13x16x0.2mm	12	SW-101018
101019	SHIM 6.0x10.0x0.2mm	1	SW-101019
101020A	S350 Sries 3mm Countersunk Washers (GM)	5	SW-101020A
101021	M3x8xT0.8mm	2	SW-101021
101039	Steel Washer 5x12x0.3mm	6	SW-101039
103001	M3 Nut Lock	17	SW-103001
103003A	Flange M3 Nut Lock (GM)	5	SW-103003A
103004	M2.5mm Nut Lock	4	SW-103004
104004	M3x3mm Set Screw	4	SW-104004
104005	M3x4mm Set Screw	4	SW-104005
104009	M3x16mm Set Screw	1	SW-104009
104010	M5x4mm Set Screw (Flat Bottom)	6	SW-104010
104011	M4x4mm Set Screw (Flat Bottom)	1	SW-104011
105001	M3x8mm Cap Screw	1	SW-105001
105005	M3x12mm Cap Screw	2	SW-105005
105006A	M3x28mm Cap Screw full thread	2	SW-105006A
105013A	M3x25mm Cap Screw	2	SW-105013A
105018	M2x6mm Cap Head Screw	1	SW-105018
105020	M4x10mm Cap Screw	2	SW-105020
106001	M3x8mm Hex Socket OH/TP Screw	1	SW-106001
106002	M3x10mm Hex Socket OH/TP Screw	12	SW-106002
106003	M3x16mm Hex Socket OH/TP Screw	4	SW-106003
106006	M3x20mm Hex Socket OH/TP Screw	6	SW-106006
106007	M3x12mm Hex Socket OH/TP Screw (HT)	3	SW-106007

Part No.	Part Name	Q`ty in Use	Item No.
106008	M3x12mm Hex Socket OH/TP Screw	8	SW-106008
106009	M3x25mm Hex Socket OH/TP Screw	6	SW-106009
106013	M2.5x8mm 1.5mmHex Socket OH/ST Screw	6	SW-106013
106015	M3x5mm Hex Socket OH/TP Screw	2	SW-106015
106020	M2.5x5mm 1.5mmHex Socket OH/ST Screw	10	SW-106020
106021A	S35 Series M4x10mm Hex Socket OH/TP Set Screw	4	SW-106021A
106024	M4x12mm Hex Socket OH/TP Screw	2	SW-106024
106025	M2.5x8mm Hex Socket OH/TP Screw	5	SW-228008BK
108001	M3x12mm FH/ST HEX Screw	20	SW-108001
108003	M3x10mm FH/ST HEX Screw	33	SW-108003
108005	M3x14mm FH/ST HEX Screw	2	SW-108005
108006	M3x8mm FH/ST HEX Screw	29	SW-108006
108007	M3x6mm FH/ST HEX Screw	6	SW-108007
108008	M3x35mm FH/ST HEX Screw	4	SW-108008
108010	M4x10mm FH/ST HEX Screw	4	SW-108010
108012	M4x16mm FH/ST HEX Screw	8	SW-108012
108019	M2.6x6mm FH/ST HEX Screw	2	SW-108019
108029	M2.0x4.6mm FH/ST HEX Screw (1.5mm HexHead)	4	SW-108029

Item No.	Part Name
SW-2501097B	S35 Series Front Bumper (2PC)
SW-2501121C	S35/S350 Series Ball End Set with Shock Plastic Parts
SW-2501122B	S35/S350 Series Settring Bellcrank Set 2.0 Set (with Servo Horn)
SW-2503260	S353 Series Plastic Inserts Set
SW-2503261A	S35-3/GT Series Gear Box Set (Fit 5x13x4mm Ball Bearing)
SW-2503264A	S35-3 Series Front Steering Knuckle (Type 2.0)
SW-2503270-01	S35-3 Series Front Upper Arms (2pc)
SW-2503270-02	S35-3 Series Rear Upper Arm Outside Ball Ends (2pc)
SW-2503270-03	S35-3 Series Front Steering Ball Ends (4pc)
SW-228001	S35-4 Series Plastic Inserts Set (2Set)
SW-228002-1	S35-4 Series Plastic Rear Wheel Hub (R=L)(2PC)
SW-228003A	S35 Series Integrated Wing Mount Set 2.0
SW-228004	S35-4 Series Plastic Side Guard Set
SW-228005S-F	S35-4 Series Front Lower Arm in Soft Material (1PC)
SW-228005S-R	S35-4 Series Rear Lower Arm in Soft Material (1PC)
SW-228006	S35 Series Shock End/Body Mount/Ball Ends Set (2Set)
SW-228007	S35-4E Buggy Series Steering Servo Mount/Center Diff Mount Plastic Parts
SW-228008BK	SWORKz 1/8 Off Road Formula 2.0 Race Wing (BK)
SW-200193	Antenna Tube
SW-210046	S350 Series LDS Universal Cross Drive Shaft Set 92.5mm (1pc)
SW-210058	S350 series BBS Shock Seal Kit
SW-210079A	S35-4 Plastic Center Big Bore HET Diff Case
SW-210091	S35-3W Plastic Front/Rear Big Bore Diff Case
SW-258001C-E	S35 Series Falcon ST-4 Clean Body Shell (Pre-Cut for EP Buggy)
SW-328001	S35-3/4 Series HET Diff. Bevel Gear Set
SW-330015	Pin M2.2x9.9mm
SW-330114A	S350 Sseries Servo Saver Post (HC)
SW-330117A	S350 Series Knuckle Pivot Ball Washer (GM)
SW-330118A	S350 Series Knuckle Pivot Ball Nut (GM)
SW-330119	Front Upper Arm Hinge Pin
SW-330121B	S350 Wheel Hub (L4.5mm)(HC)
SW-330122A	S350 Wheel Nut (HC)
SW-330123A	S350 EVO Rear Upper Sus. Arm Turnbuckles M5x38mm
SW-330124	Pin M3.0x16.8mm
SW-330125	Rear Upper Sus. Arm Ball Stud
SW-330126A	S350 EVO Steering Turnbuckle M4x40mm
SW-330134	Shock Ball Stud 6mmxL6.7
SW-330136	Sway Bar Ball Stud
SW-330138B	S350 Series Aluminum Shock Cap Stud (-1.3mm)(2PC)
SW-330243	SWORKz 3x18mm Shock Hex Screw Set (Anti-Clockwise)
SW-330245	SWORKz 1/8 Motor Pinion Gear 15T
SW-330252	S350 BX1/BR1 Steering Knuckle Pivot Ball Turnbuckle
SW-330557	S350 New BBS System Shock Seal Cap (GM)
SW-330560B	S35 New BBS System Shock Spring Adjust Nut (BK)
SW-330562A	S35 Series BBS System Shock Piston 1.3mmX6 Holes (BK)(2PC)
SW-330563A	S35 Series BBS System Shock Piston 1.4mmX6 Holes (BK)(2PC)
SW-330661A	S35-T/S35 Series Competition Center Drive Join (5mm set screw)
SW-330694A	S35 E Series 6mm Steel Ball Stud
SW-330697	S35-2E Center Rear Drive Shaft (S)
SW-330699B	S35-2E/3E Center Main Drive Shaft (L)
SW-330777A	S35-4 Series Steering Linkage Ball Stud 7mm(L7)(4PC)
SW-330782	S35-3 Series Rear Hub Carriers Hinge Pin
SW-338011	S35-3 series Pinion Gear Stopper (5x7x5.1mm)(4PC)
SW-338014	S35-3W T-7075AL Rear Lower Fully Adjustable Toe-In Block(3 degree)
SW-338023	S35-3W Pinion Gear 13T
SW-338024	S35-3W Crown Gear 43T
SW-338025	S35-4 HET Bevel Gear Shaft (2pc)
SW-338027	S35-4 Front/Rear HET Diff. Outdrive (2pc)
SW-338028	S35-4 Center HET Diff. Outdrive (2pc)
SW-338038A	S35-3E/S35-2E/Apollo Series T7075 Roll Bar Brace
SW-338039	S35-3/4 Series Center HET Spur Gear (46T)
SW-338043	S35-3/4 Series Servo Saver Nut with Screw Fixed
SW-338048	S35-4 Series Servo Saver Shaft(2PC)
SW-338049	S35-4 Series T7 Aluminum Rear Front Lower Suspension Plate (RF)
SW-338050	S35-4 Series T7 Aluminum Rear Shock Tower
SW-338051	S35-4 Series T7 Aluminum Steering Knuckle Plate (R=L)
SW-338052	S35-4 Series T7 Aluminum Settring Bellcrank Upper Part-A (with 2Hole)
SW-338053	S35-4 Series T7 Aluminum Steering Plate
SW-338054	S35-4 Series T7 Aluminum Front Shock Tower
SW-338056	S35-4 Series Lower Arm Hinge Pin (68.5mm)(2pc)
SW-338057	S35-4 Series T7 Aluminum Front Upper Arm Holder
SW-338058	S35-4 Series T7 Aluminum Front Lower Arm Plate (FF)
SW-338059	S35-4 Series T7 Aluminum Front Lower Arm Holder (FR)
SW-338060	S35-4 Series BBS System Shock Body (L)(2PC)
SW-338061	S35-4 Series BBS System Shock Body (S)(2PC)

Spare Part List

Item No.	Part Name
SW-338062A	S35-4 Series BBS System Teflon Coated Durable Shock Shaft (L)
SW-338063A	S35-4 Series BBS System Teflon Coated Durable Shock Shaft (S)
SW-338064A	S35-4 E-Buggy Series T7075 Aluminum Lightened Main Chassis
SW-338065	S35-4 E-Buggy Series T7 Aluminum Motor Mount
SW-338066	S35-4 E-Buggy Series T7 Aluminum Center Diff Mount (CF)
SW-338067	S35-4 Series Emulsion/Bladder 2 Ways Syatem Shock Cap (2PC)
SW-338068	S35-4 Series T7 Aluminum Shock Stud (L)(2PC)
SW-338070B	S35 Series Rear Upper Sus. Arm Ball Stud (7.0mm Hex)
SW-340003	S35-3 Series Pro-composite Carbon Front Upper Arm Cover Set (1mm)
SW-340015	S35-3E/S35-2E/Apollo Series Carbon Fiber Rear Brace Mount
SW-340016	S35-4 Series Pro-composite Carbon Rear Wheel Hub Adjust Plate (R=L)(2PC)
SW-340017	S35-4 Series Pro-composite Carbon Steering Bellcrank Plate
SW-340018	S35-4E Series Pro-composite Carbon Center Diff. Plate
SW-400002	O-ring S5 4.8X1.5
SW-400005	Shock Spring Adjust Nut O-Ring
SW-400009	Shock Boot (L)
SW-400010	Shock Boot (S)
SW-400013	SWORKz Shock Seal O-ring 2x2.7mm (8PC)
SW-400019	S350 New BBS System Shock Spring Adjust Nut O-Ring (4pc)
SW-400020	S350 New BBS System Shock Seal O-Ring (4pc)
SW-400023	S35-4 Series BBS System Seal O-Ring for Emulsion Shock Cap (4PC)
SW-40022	S350 New BBS System Shock Bladder (Medium)
SW-420010	Antenna Cup
SW-510091	SWORKz Origional Logo Sticker (2PC)
SW-610019	S35-3 Series Servo Saver Spring Dusty Protect Sponge (2pc)
SW-610020	S35-3 Series Center Big Bore Plastic Diff. Case Gasket (3pc)
SW-610023	S35-4 HET Diff. Gasket (0.4T)(4pc)
SW-115004A	Servo Saver Spring
SW-115005	Rear Sway Bar 2.8mm
SW-115006	Rear Sway Bar 2.6mm
SW-115008A	Front Sway Bar 2.3mm
SW-115019	Body Clip
SW-115035A	S35/350 Series Front Sway Bar 2.2mm
SWC-115164	S35 Series Black Competition Front Shock Spring (M3-Dot)(75X1.6X9.0)
SWC-115191	S35 Series Competition Black Line Rear Shock Spring (RM3-Dot)(80X1.6X10.0)
SW-116004R	Ball Bearing 6x10x3mm (Red Rubber Case)(4PC)
SW-116006R	Ball Bearing 8x16x5mm (Red Rubber Case)(10PC)
SW-116019R	Ball Bearing 5x13x4mm (Red Rubber Case)(4PC)
SW-117003	Flange Ball Bearing 3x6x2.5mm(2pc)
SW-101004	Washer 3.5X10X0.2mm
SW-101010A	M3 Countersunk Washer(GM)
SW-101011	M2.6x6xT0.6mm
SW-101012	M3x6xT0.6mm
SW-101018	SHIM 13x16x0.2mm
SW-101019	SHIM 6.0x10.0x0.2mm
SW-101020A	S350 Sries 3mm Countersunk Washers (GM)
SW-101021	M3x8xT0.8mm
SW-101039	Steel Washer 5x12x0.3mm
SW-103001	M3 Nut Lock
SW-103003A	Flange M3 Nut Lock (GM)
SW-103004	M2.5mm Nut Lock
SW-104004	M3x3mm Set Screw
SW-104005	M3x4mm Set Screw
SW-104009	M3x16mm Set Screw
SW-104010	M5x4mm Set Screw (Flat Bottom)
SW-104011	M4x4mm Set Screw (Flat Bottom)
SW-105001	M3x8mm Cap Screw
SW-105005	M3x12mm Cap Screw
SW-105006A	M3x28mm Cap Screw full thread
SW-105013A	M3x25mm Cap Screw
SW-105018	M2x6mm Cap Head Screw (10PC)
SW-105020	M4x10mm Cap Screw (8PC)
SW-106001	M3x8mm Hex Socket OH/TP Screw
SW-106002	M3x10mm Hex Socket OH/TP Screw
SW-106003	M3x16mm Hex Socket OH/TP Screw
SW-106006	M3x20mm Hex Socket OH/TP Screw
SW-106007	M3x12mm Hex Socket OH/TP Screw(HT)
SW-106008	M3x12mm Hex Socket OH/TP Screw
SW-106009	M3x25mm Hex Socket OH/TP Screw
SW-106013	M2.5x8mm 1.5mmHex Socket OH/ST Screw
SW-106015	M3x5mm Hex Socket OH/TP Screw
SW-106020	M2.5x5mm 1.5mmHex Socket OH/ST Screw
SW-106021A	S35 Series M4x10mm Hex Socket OH/TP Set Screw
SW-106024	M4x12mm Hex Socket OH/TP Screw (8PC)
SW-108001	M3x12mm FH/ST HEX Screw

Item No.	Part Name
SW-108003	M3x10mm FH/ST HEX Screw
SW-108005	M3x14mm FH/ST HEX Screw
SW-108006	M3x8mm FH/ST HEX Screw
SW-108007	M3x6mm FH/ST HEX Screw
SW-108008	M3x35mm FH/ST HEX Screw
SW-108010	M4x10mm FH/ST HEX Screw
SW-108012	M4x16mm FH/ST HEX Screw
SW-108019	M2.6x6mm FH/ST HEX Screw
SW-108029	M2.0x4.6mm FH/ST HEX Screw (1.5mm HexHead)

Option Part List

Item No.	Part Name
SW-116006A	High Performance Rubber Cover Ball Bearing 8x16x5mm (10pc)
SW-116010B	High Performance Ball Bearing 5x10x4mm(coffee)(4pc)
SW-116019C	SWORKz High Performance 5x13x4mm Ball Bearing (Rubber Case)(4PC)
SW-250050	SWORKz 1/8 Off Road Formula Bulkhead Wing (4PC)/ Front Upper Arm's Wing Set (4PC)
SW-250050A	SWORKz 1/8 Off Road Formula Bulkhead Lexan Wing (0.8mm)(4PC)
SW-250041	S350 Falcon II Clean Body Shell
SW-2501116	S-WORKz High Done Force Wing Set (BK)(Fit S350)
SW-2501116A	S-WORKz High Done Force Wing Set (BK)
SW-2501116AFY	S-WORKz High Done Force Wing Set (FY)
SW-2501116AWH	S-WORKz High Done Force Wing Set (WH)
SW-2503260FO	S353 Series Colorful Plastic Inserts Set (FO)
SW-2503260FY	S353 Series Colorful Plastic Inserts Set (FY)
SW-2503260LB	S353 Series Colorful Plastic Inserts Set (SB)(2 SET)
SW-2503270-01H	S35-3 Series Front Upper Arms with Hard Material (2pc)
SW-210079AH	S35-4 Plastic Center Big Bore HET Diff Case (Hard)
SW-210091H	S35-4 Plastic Front/Rear Big Bore HET Diff Case (Hard)
SW-218006	S35-4 Series HET Front/Rear Big Bore Diff. Set (43T)
SW-218016	S35-4/E BBS Pro Shock System Front Set
SW-218017	S35-4/E BBS Pro Shock System Rear Set
SW-228005M-F	S35-4 Series Front Lower Arm in Medium Material (1PC)
SW-228005M-R	S35-4 Series Rear Lower Arm in Medium Material (1PC)
SW-228005H-F	S35-4 Series Front Lower Arm in Hard Material (1PC)
SW-228005H-R	S35-4 Series Rear Lower Arm in Hard Material (1PC)
SW-228008WH	SWORKz 1/8 Off Road Formula 2.0 Race Wing (WH)
SW-228008FY	SWORKz 1/8 Off Road Formula 2.0 Race Wing (FY)
SW-300049	SWORKz S35-3/S350 Series Rear Stainless Chassis End Protection (2PC)
SW-330115	Steering Knuckle Pivot Ball Turnbuckle
SW-330116	14mm Knuckle Pivot Ball
SW-330125A	S350 Series Aluminum Rear Upper Sus. Arm Ball Stud(4pc)
SW-330134A	S350 Series Aluminum Shock Ball Stud(4pc)
SW-330136A	S350 Series Aluminum Sway Bar Ball Stud(4pc)
SW-330168A	S35-3 Series Rear Chassis Blance wight 15g(2pc)
SW-330398A	SWORKz S350 Series Pro Wheel Nut (GM)
SW-330420	S350 Series Knuckle Pivot Ball Balance Nut (5.5g) (2pc)
SW-330424	S350 Series Aluminum Wing Holder (RED)
SW-330424B	S350 Series Aluminum Wing Holder (BK)
SW-330424G	S350 Series Aluminum Wing Holder (GM)
SW-330505A	S35 Series Lightened Wheel Hub for 8mm Axil (L6.5mm)
SW-330506A	S35 Series Lightened Wheel Hub for 8mm Axil (L5.0mm)
SW-330564A	S35 Series BBS System Shock Piston 1.5mmX6 Holes (BK)
SW-330565	S350 BBS System Shock Piston 1.3mmX8 Oblique Holes (2pc)
SW-330566	S350 BBS System Shock Piston 1.2mmX8 Oblique Holes (2pc)
SW-330696	S35E Series Aluminum Rear Drive Shaft (S)
SW-330698	S35E Series Aluminum Center Main Drive Shaft (L)
SW-330777B	S35-4 Series Aluminum Steering Linkage Ball Stud 7mm(L7)(4PC)
SW-330235	SWORKz 1/8 Motor Pinion Gear 13T
SW-330239	SWORKz 1/8 Motor Pinion Gear 14T
SW-330246	SWORKz 1/8 Motor Pinion Gear 16T
SW-330247	SWORKz 1/8 Motor Pinion Gear 17T
SW-330817	SWORKz 1/8 EP Motor Pinion Gear 18T
SW-330818	SWORKz 1/8 EP Motor Pinion Gear 19T
SW-330819	SWORKz 1/8 EPMotor Pinion Gear 20T
SW-338069	S35-4 E-Buggy Series Brass Material Center Chassis Brace (50g)
SW-338070A	S35 Series Rear Upper Arm Aluminum Ball Stud(2PC)
SW-338078-25	SWORKz Uni-Design 2-Way System Aluminum Steering Servo Horn 25T
SW-338078-23	SWORKz Uni-Design 2-Way System Aluminum Steering Servo Horn 23T
SW-340003A	S35-3 Series Pro-composite Carbon Front Upper Arm Cover (1.5mm)(2PC)
SW-350002A	S35 Series BBS System Shock Piston 1.2mmX8 Straight Holes (BK)
SW-350003A	S35 Series BBS System Shock Piston 1.3mmX8 Straight Holes (BK)
SW-400022A-M	S35 Series BBS System Pro Shock Bladder (Medium)(8PC)
SW-400024S	S35 Series BBS System Hex-Cell Shock Bladder(Soft)(4PC)
SW-400024M	S35 Series BBS System Hex-Cell Shock Bladder(Medium)(4PC)
SWC-115107	S350 Competition Shock Spring A-2 (75X1.4X7.25)(Red)
SWC-115109	S350 Competition Shock Spring B-2 (90X1.4X8.5)(Pink)
SWC-115110	S350 Competition Shock Spring C-1 (75X1.5X7.75)(SkyBlue)
SWC-115118	S350 Competition Shock Spring E-3 (90X1.5X8.5)(Blue)
SWC-116006C	SWORKz Competition 8x16x5mm Ball Bearing (Metal Case)(6PC)
SWC-116019A	SWORKz Competition 5x13x4mm Ball Bearing (Metal Case)(4PC)
SWC-116019B	SWORKz Competition 5x13x4mm Ball Bearing (Metal Case/Japan)(4PC)
SW-218001	S35/350 Series Font Sway Bar Set (2.0/2.1/2.2/2.3/2.4/.2.5/2.6/2.8mm)
SW-218002	S35/350 Series Rear Sway Bar Set (2.4/2.5/2.6/2.7/2.8/3.0mm)
SWC-340007	S35-3 Series Pro-composite Carbon Front Upper Done Force Wing Set
SWC-330115A	S350 Series Competition Titanium Steering Knuckle Pivot Ball Turnbuckle
SWC-338015	S35-3 T-7075AL Rear Hub Carry for Wide Suspension (R=L)(1pc)
SW-338039	S35-3/4 Series Center HET Spur Gear (46T)

Item No.	Part Name
SW-338041	S35-3/4 Series Center HET Spur Gear (48T)
SW-338075	S35-4 Series T7 Aluminum Rear Wheel Hub (R=L)(2PC)
SW-338080	S35/S350 Series Lightened Wheel Hub for 8mm Axil (L5.5mm)
SWC-115163	S35 Series Black Competition Front Shock Spring (M4-Dot)(75X1.6X8.75)
SWC-115164	S35 Series Black Competition Front Shock Spring (M3-Dot)(75X1.6X9.0)
SWC-115165	S35 Series Black Competition Front Shock Spring (M2-Dot)(75X1.6X9.25)
SWC-115182	S35-4 Black Competition Front Shock Spring (US4-Dot)(62X1.6X7.5)
SWC-115184	S35-4 Black Competition Front Shock Spring (US2-Dot)(62X1.6X8.0)
SWC-115190	S35 Series Competition Black Line Rear Shock Spring (RM4-Dot)(80X1.6X9.75)
SWC-115192	S35 Series Competition Black Line Rear Shock Spring (RM2-Dot)(80X1.6X10.25)
SWC-218007A	S35 Series Evolution-CVA Drive Shaft Set 92.5mm(1 Sets)
SWC-218007D	S35 Series Advance-CVD Drive Shaft Set 92.5mm(1 Sets)
SWC-338071	S35 Series Advance-CVD Drive Axil(1PC)
SWC-338072	S35 Series Advance-CVD Drive Shaft (92.5mm)(1PC)
SWC-338073	S35 Series Evolution-CVA Drive Axil(1PC)
SWC-338074	S35 Series Evolution-CVA Drive Shaft (92.5mm)(1PC)
SWC-338076	S35 Series E-CVA/A-CVD Pin M2.5x14(2PC)
SWC-338077	S35-4 Series E-CVA/A-CVD Axil Join(2PC)
SWC-228012	1/8 E-CVD/A-CVA Axil Holder (10PC)

Shock Absorbers

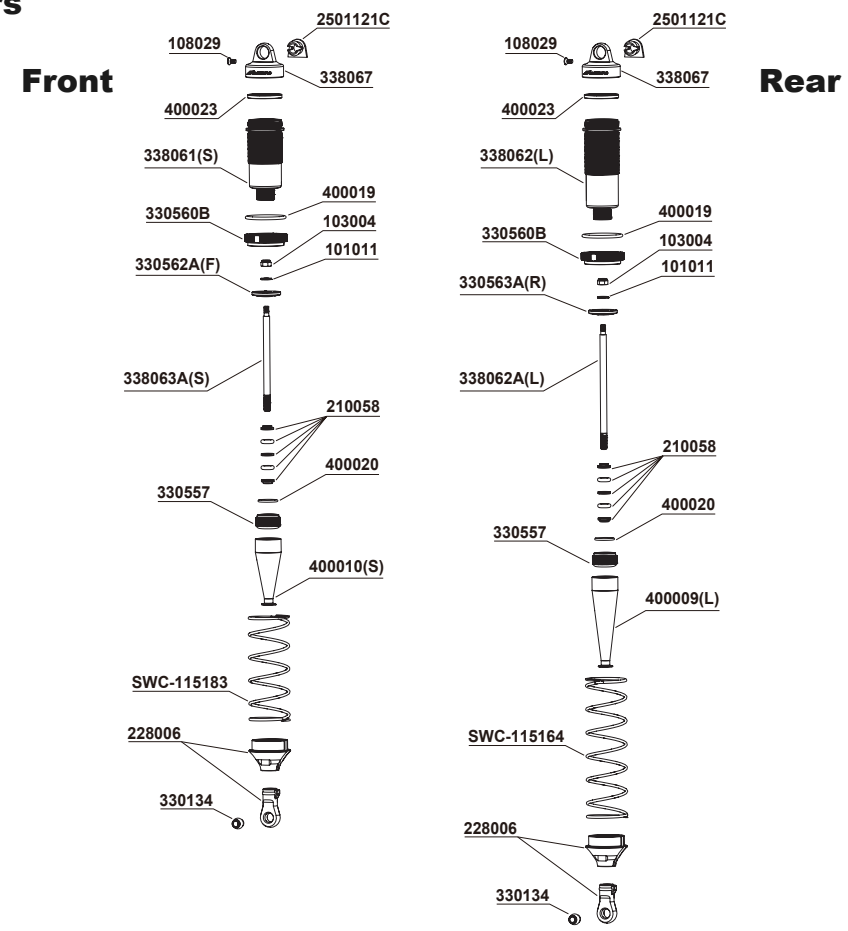

Differential

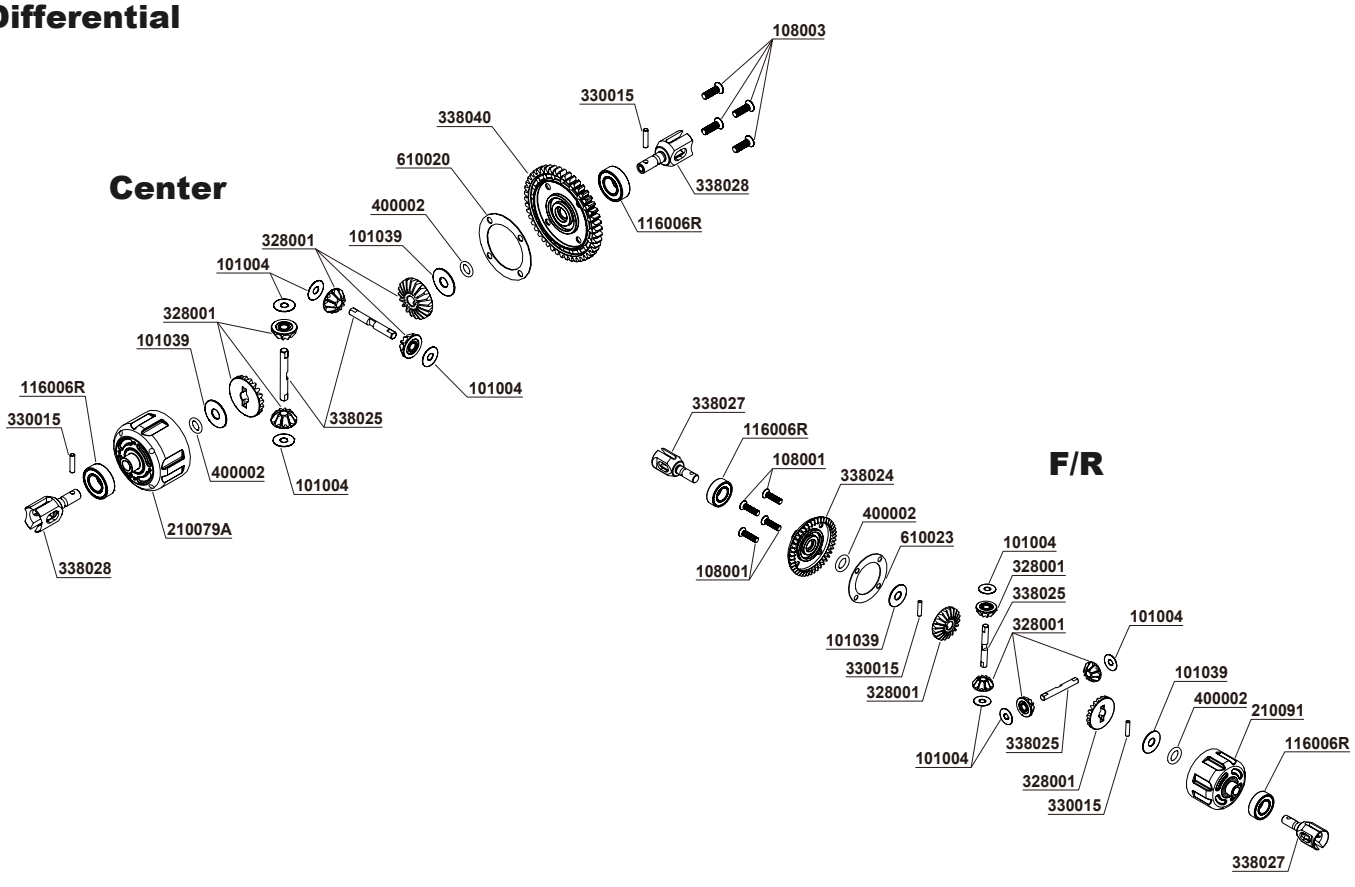

Front Suspension



Center Transmission

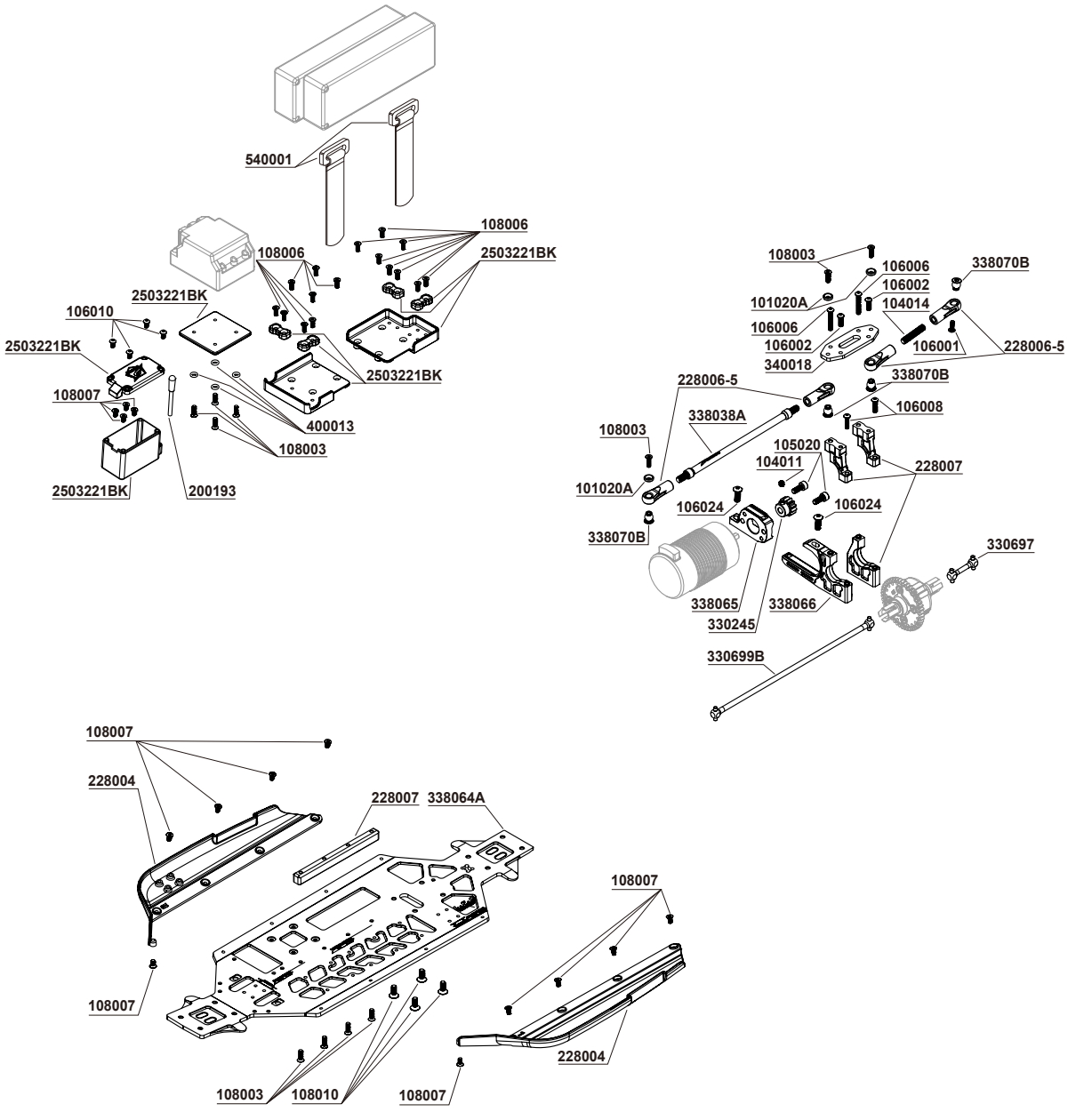

Rear Suspension

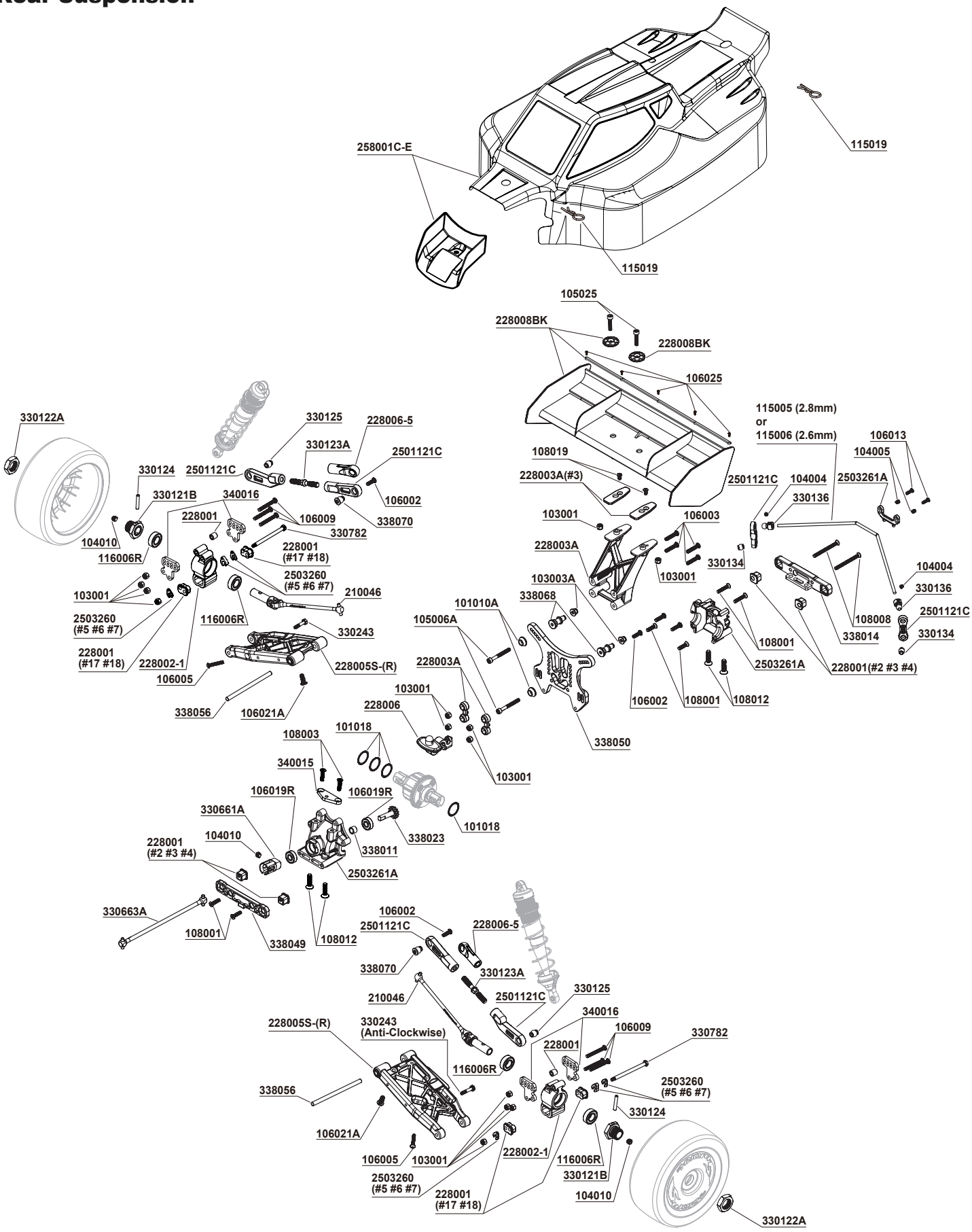

S35-4E

1/8 Off Road Brushless Power Pro Buggy

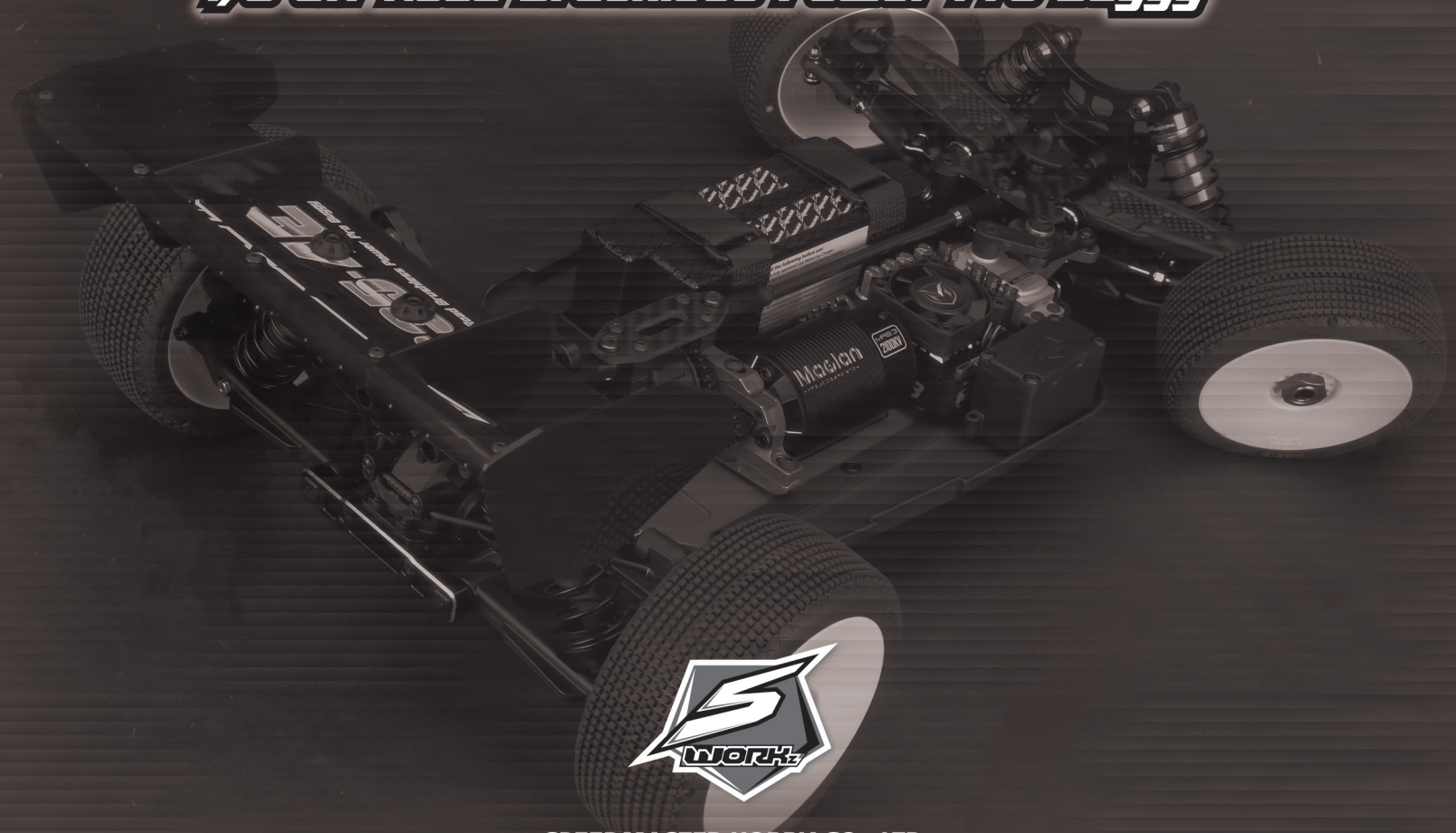

SPEEDMASTER HOBBY CO., LTD.

TEL: +886-3-538-7638

FAX: +886-3-538-7328

No.42, Ruiguang St., Xiangshan Dist.,

Hsinchu City 300, Taiwan (R.O.C.)

www.sworkz.com

508002

Production No. 36120203