S35-4e EVO

1/8 Off Road Brushless Power Pro



SWORKz S35-4e EVO INSTRUCTION MANUAL

S35-4e EVO

1/8 Off Road Brushless Power Pro Buggy

INSTRUCTION

The S35-4e EVO is the design evolution from S35-4E Euros Champion.

Continue the successful SWORKz S35-4E 1/8 Electric Buggy platform, the new S35-4e EVO is designed for more higher level racing product.

The new geometry from European Champion Edition conversion kit provides optimized corner speed compared with more easy handling and maximum traction.

The S35-4e EVO features a T7075 hard anodized and lightened aluminum chassis with a new short wheel base design, that was tested for a long time by our factory pilots to guarantee the best speed balance for both front and rear suspensions.

The standard HET differentials are included and provide High Density Motor Pinion Gear system for options.

The new S35-4e EVO comes a brand new steering Lay-Down Type Steering Bellcrank servo savor system. With this new Ackerman design gives the driver the feeling of total control over the S35-4e EVO.

The SWORKz S35-4e EVO standard includes the Arched-Bridge-System and the higher capacity shock system. This is a big step for S35-4e EVO, the design made the car go faster and be more stable.

In the kit we include a special BBS piston and oil seal parts that the worlds team drivers tested during the race. They are made by a high Precision Plastic mold machine.

Also included are specially made durable material parts for the suspension like inserts which our team drivers used and felt immediately more confident.

The center chassis lay out is the brand new design for S35-4e EVO. Its provides 2 ways battery set up. Standard 2S peck batteries (or 2S shorty) can be used in saddle position for lower center of gravity. And one unit 4S standard peck(or shorty) also can be fit in side position.

There many more small changes and smart ideas in your new SWORKz S35-4e EVO, it's the evolution result which works by whole team that make the car being a real winner.

The secret of a modern racing car is the possibility to adapt the setup to every track for top pilots but also have a standard setup that works on most tracks for hobby pilots. And your SWORKz S35-4e EVO is having these two characteristics in perfection.

Congratulations on your purchase of the new SWORKz S35-4e EVO 1/8 scale off-road racing buggy pro kit and thanks for trusting in SWORKz.

Please read this manual carefully, before you start to build and drive your SWORKz S35-4e EVO. This manual contains step-by-step instructions to helping you completing, preparing and fine tuning your buggy for racing. Updates, setups, and product news will be posted on all SWORKz digital media.

As always, if you should ever have any questions or need help with your SWORKz products, please feel free to contact our official SWORKz dealers and distributors.

S35-4e EVO Kit Features:

- T7075 Hard Anodized, Lightend Aluminium Chassis (New)
- Short Chassis Design (New)
- Higher Shock Towers (New)
- Longer Shock Bodies (New)
- Shorter Shock Shafts
- S35 Series BBS System Hex-Cell Shock (New)
- Shorter Front Shock Springs
- SWORKz 1/8 BBS Precision Plastic Shock Piston (New)
- Fixed Shock Spring Holder
- 3mm Updated Rear Shock Studs
- Ackerman Plate (New)
- Steering System (New)
- Servo Saver Aluminium Part (New)
- Servo Saver Plate (New)
- Servo Saver Post Locking Design (New)
- Steering Ball Studs (New)
- Steering Knuckle Plates (New)
- Updated Toe In Plates with Square Inserts (New)
- Aluminum Intensity F/F and R/F Narrow Lower Suspension Plate (New)
- Brand New Center Chassis Lay Out Design (New)
- Easy Change Motor Mounting Plate (New)
- Brand New Steering Servo Holder (New)
- Brand New Radio ESC Case Design (New)
- Brand New Battery Case (New)
- Lightweight Wing Mount
- SWORKz S35-4 Series Arched-Bridge-System Rear Lower Arm Set (New)
- Composite Rear Hubs with Carbon Plates
- Multi Adjustable Ball System for Rear Upper Arms
- Anticlock Screws for Shocks
- Aerodinamically Optimized Body Shell
- 3 HET Differentials Included
- Black Competition Shock Springs Included
- Adjustable Wing Position
- Adjustable Wing Angle
- More Balance Weight Positions
- Stronger Downstop Area
- Optimized Composite Material



Specification	
Length:	510mm
Width:	308mm
Height:	220mm
Ground Clearance:	65mm
Wheelbase:	325-330mm
Track:	F:304mm / R:306mm
Gear Ratio:	C:46/15T, F/R:43/13T
Weight:	3680g (Race condition)

WARRANTY

Your SWORKz S35-4e EVO kit warranty covers workmanship and manufacturing defects of the original and unmodified parts. Warranty claims resulting from crashes, abuse, improper operation, improper mounting, improper adjustment or lack of maintenance will not be honored.

Contact your local hobby shop or SWORKz distributor for all claims and questions. Claims must be well documented. All Claims are subject to expert examination approval by SWORKz.

www.sworkz.com

INDEX

INTRODUCTION	2
Warranty	3
Required Equipment for Operation	5
Operation Guide	6
Assembly Steps	7-32
Set-up Sheet	33-35
S35-4e EVO Key No. List	36-37
S35-4e EVO Spare Part No. List	37-38
S35-4e EVO Option Part No. List	39
End cover	40



This radio controlled racing car is not a toy!

This high-performance R/C model is recommended for ages 14 and older.

Required Equipment for Operation

Radio Gear

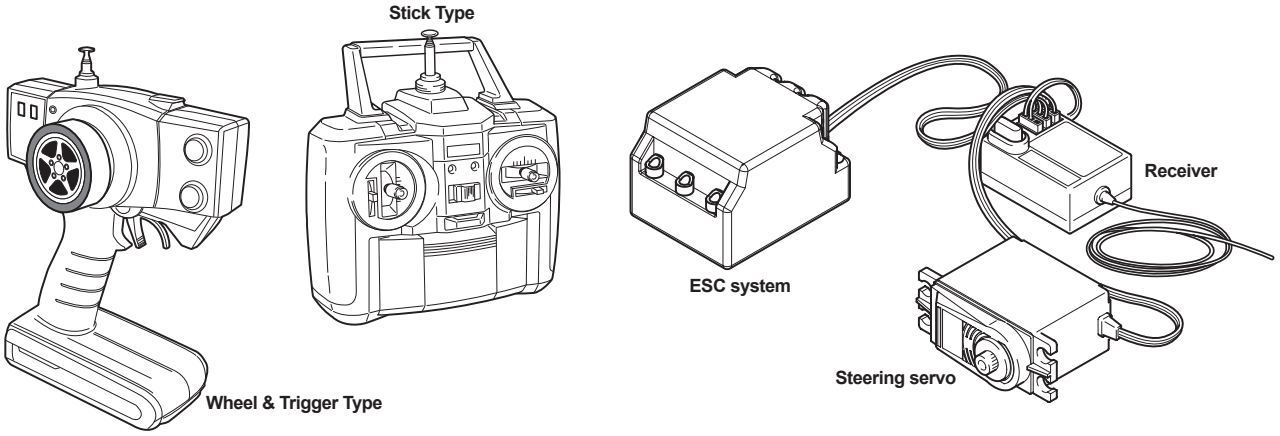

Brushless Motor

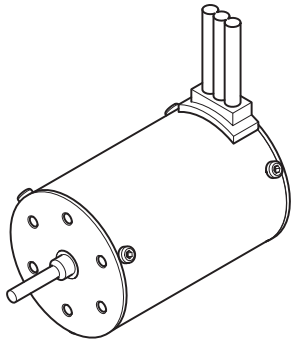

Charger and LiPo Battery

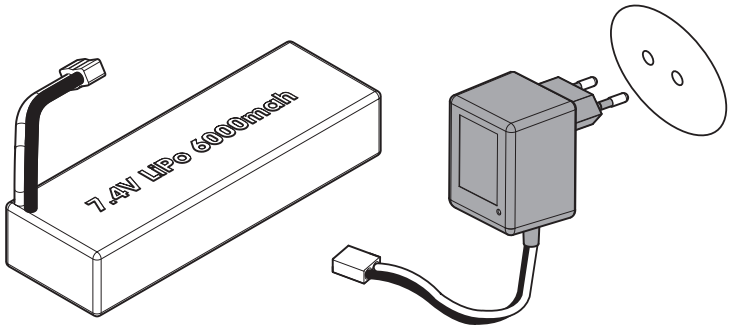

Tools Recommended

SST-PRO SUPER STIFF TOOLS

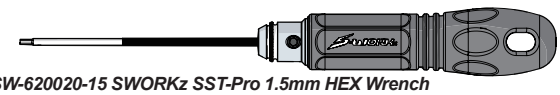

SW-620020-15 SWORKz SST-Pro 1.5mm HEX Wrench

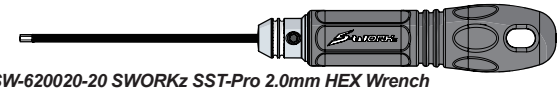

SW-620020-20 SWORKz SST-Pro 2.0mm HEX Wrench

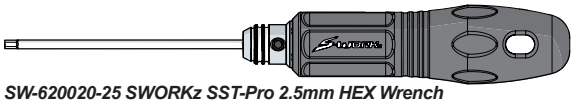

SW-620020-25 SWORKz SST-Pro 2.5mm HEX Wrench



SW-620025 SWORKz SST-Pro Shorty 7.0mm Socket Driver

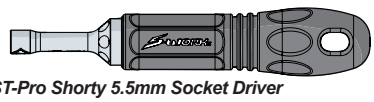

SW-620026 SWORKz SST-Pro Shorty 5.5mm Socket Driver

Long nose pliers

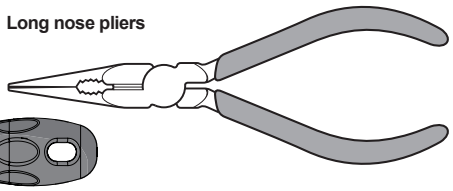

Side cutter

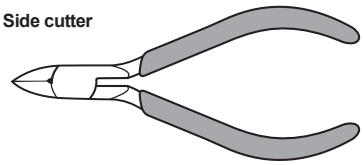

Curved scissors

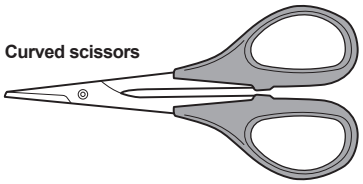

Paint



Modeling knife

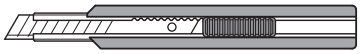

Instant cement



Thread lock

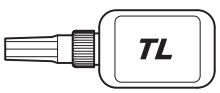

Double-sided tape



Included items

Hex wrench

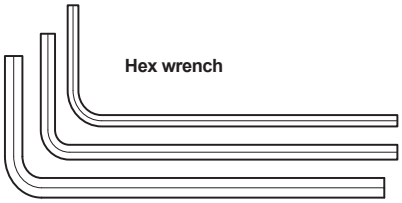

1.5mm

2mm

2.5mm

Glow plug wrench

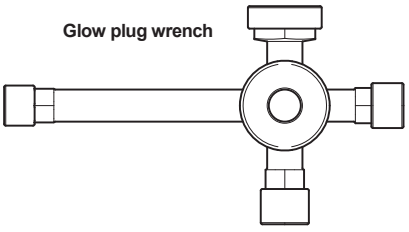

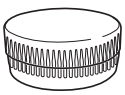

Grease

Operation Guide



Assemble front and rear

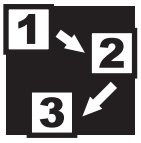

Assemble in the specified order



Assemble both left and right sides



Assemble for 2 sets



Assemble for 4 sets

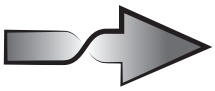

overturn



Thread Locking Compound



Grease

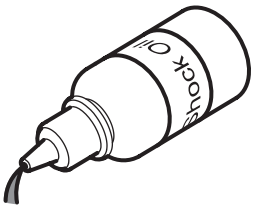

Pure Silicone Oil



Air filter oil

Safety Precautions

The SWORKz S35-4e EVO is a high performance radio controlled model which needs to be operated with caution and common sense.
The S35-4e EVO Pro Kit is not intended for children under the age of 14 without adult supervision. SWORKz shall not be held liable for any loss or damages, whether direct, indirect, act of nature, arising from the abuse or misuse of this product or any other product required while operating this model.
- The LiPO Battery can be dangerous is improperly handled.
- Always keep your LiPO Battery in a cool area and never use near flame, sparks, or while smoking.
- Keep your LiPO Battery, and all other flammables, out of the reach of children.
- After running your car, all parts of the Motor and ESC can become extremely hot. Be careful not to touch these parts.
- This model is controlled by your radio and that is vulnerable to interference from many outside sources. This interference can cause a loss of control so it is necessary to operate this model in an open area to avoid personal, or property damage. Always ensure turning on your radio first.
- Keep all the products included in the package out of reach of children.
- This model contains many fast rotating parts. Never touch them during operation.
- Follow the instruction included with your radio gear.
- Never operate your model near people or property. The speed of this model has the potential for injury and or damage to people and or property.
- Always use original SWORKz spare and option parts.
- Always encure the buggy is in proper working condition before use.
- Always exercise caution when using any and all tools.

BAG B

330015
Pin M2.2x9.9mm ***x4***

400002
O-ring S5 4.8X1.5 ***x4***

101027
Washer 5x14x0.5 ***x1***

101039
Washer 5x12x0.3 ***x1***

116006R
Ball Bearing 8x16x5mm (Red Rubber Case) ***x4***

1 F R x2

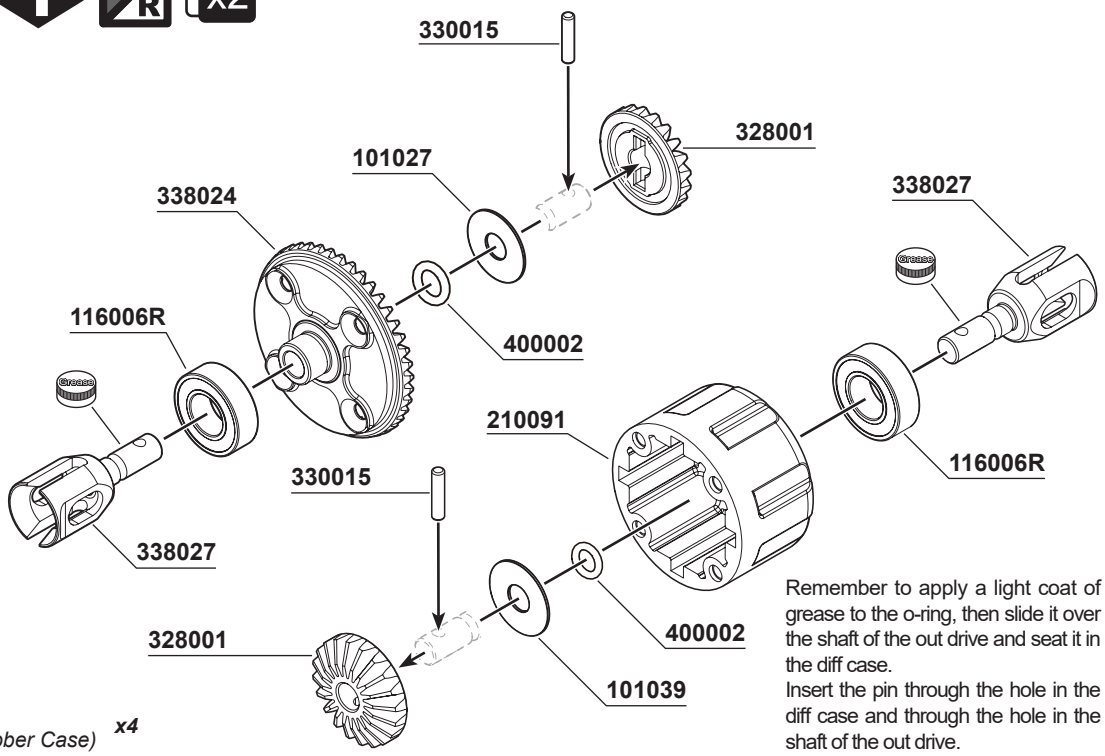

Remember to apply a light coat of grease to the o-ring, then slide it over the shaft of the out drive and seat it in the diff case.
Insert the pin through the hole in the diff case and through the hole in the shaft of the out drive.

2 F R x2

108001
M3x12mm FH/ST HEX Screw ***x8***

338025
S35-3W Bevel Gear Shaft ***x4***

101004
Washer 3.5X10X0.2mm ***x8***

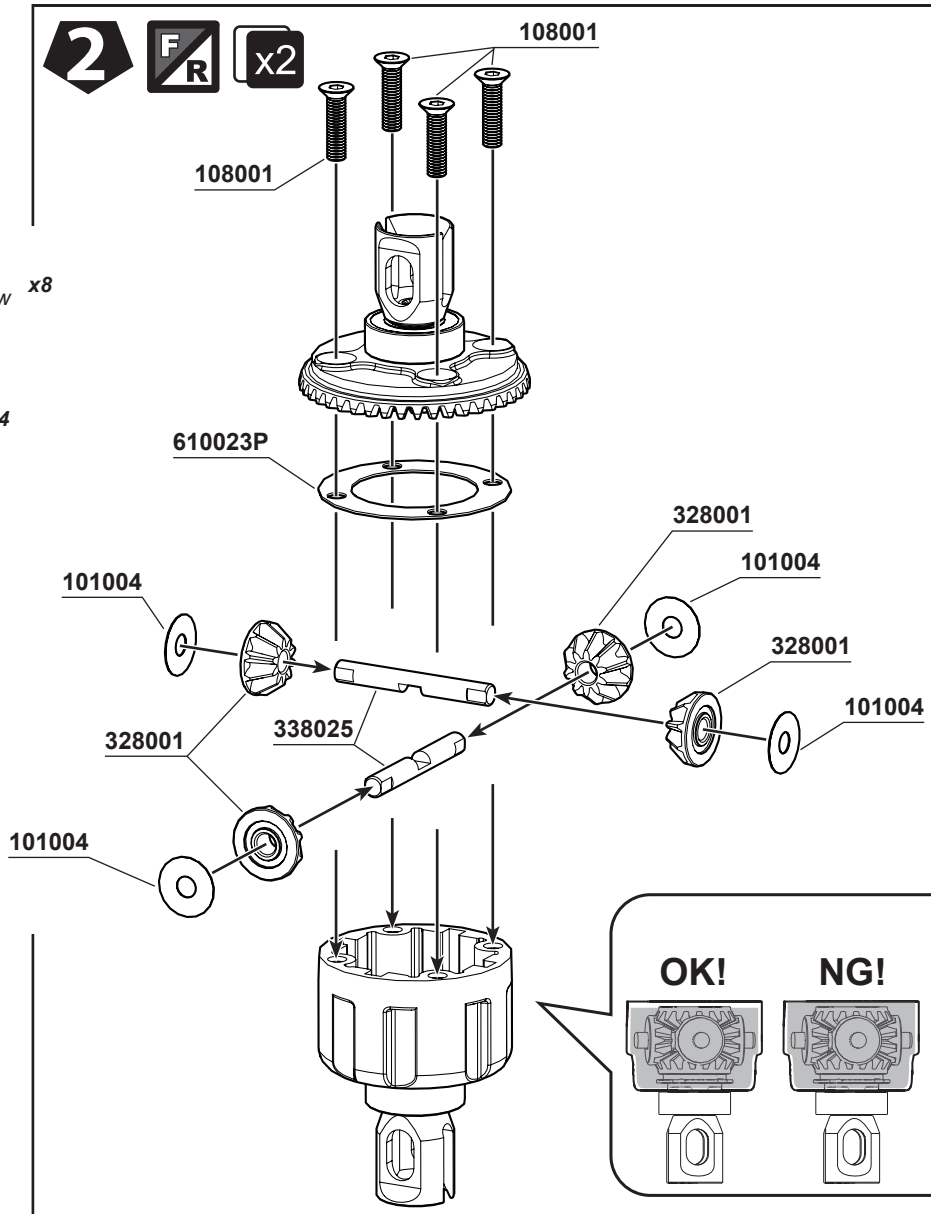

Fill the differentials with oil up to 80% above the satellite gears.
Put the SWORKz Diff. Oil 10000cps for the front Diff. and 5000cps for the rear Diff.

BAG C

330015
Pin M2.2x9.9mm **x2**

400002
O-ring S5 4.8X1.5 **x2**

101027
Washer 5x14x0.5 **x1**

101039
Washer 5x12x0.3 **x1**

116006R
Ball Bearing 8x16x5mm (Red Rubber Case) **x2**

3

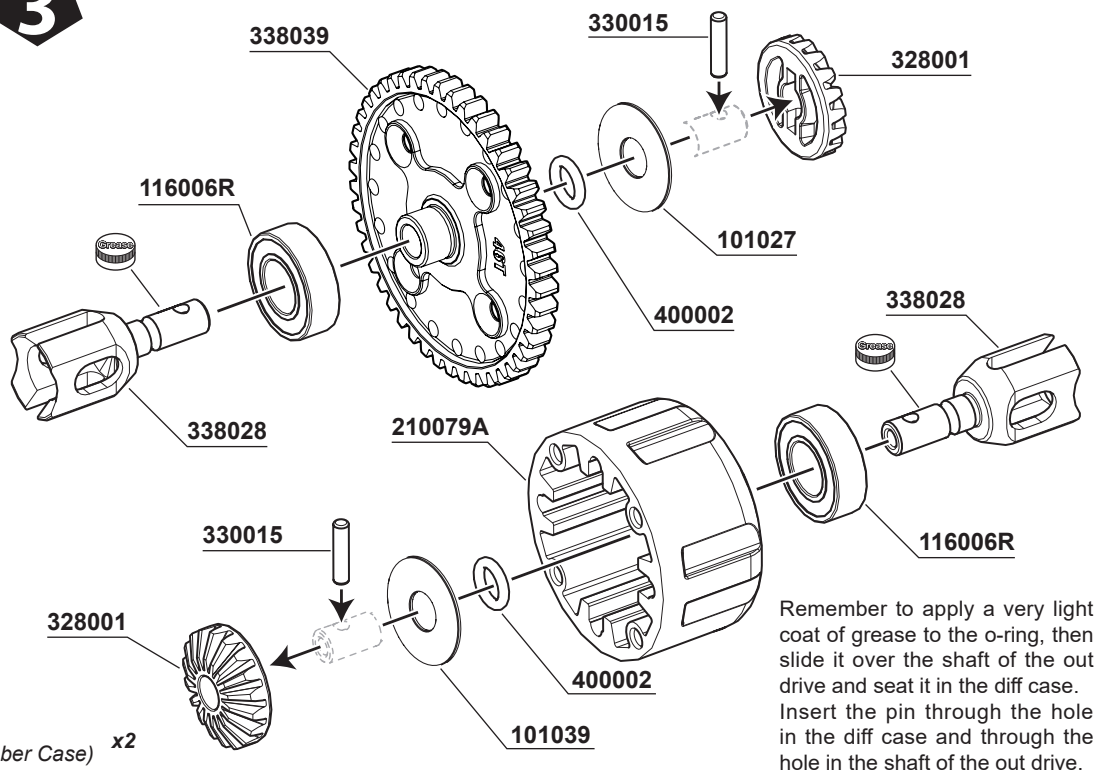

Remember to apply a very light coat of grease to the o-ring, then slide it over the shaft of the out drive and seat it in the diff case. Insert the pin through the hole in the diff case and through the hole in the shaft of the out drive.

108001
M3x12mm FH/ST HEX Screw **x4**

338025
S35-3W Bevel Gear Shaft **x4**

101004
Washer 3.5X10X0.2mm **x4**

4

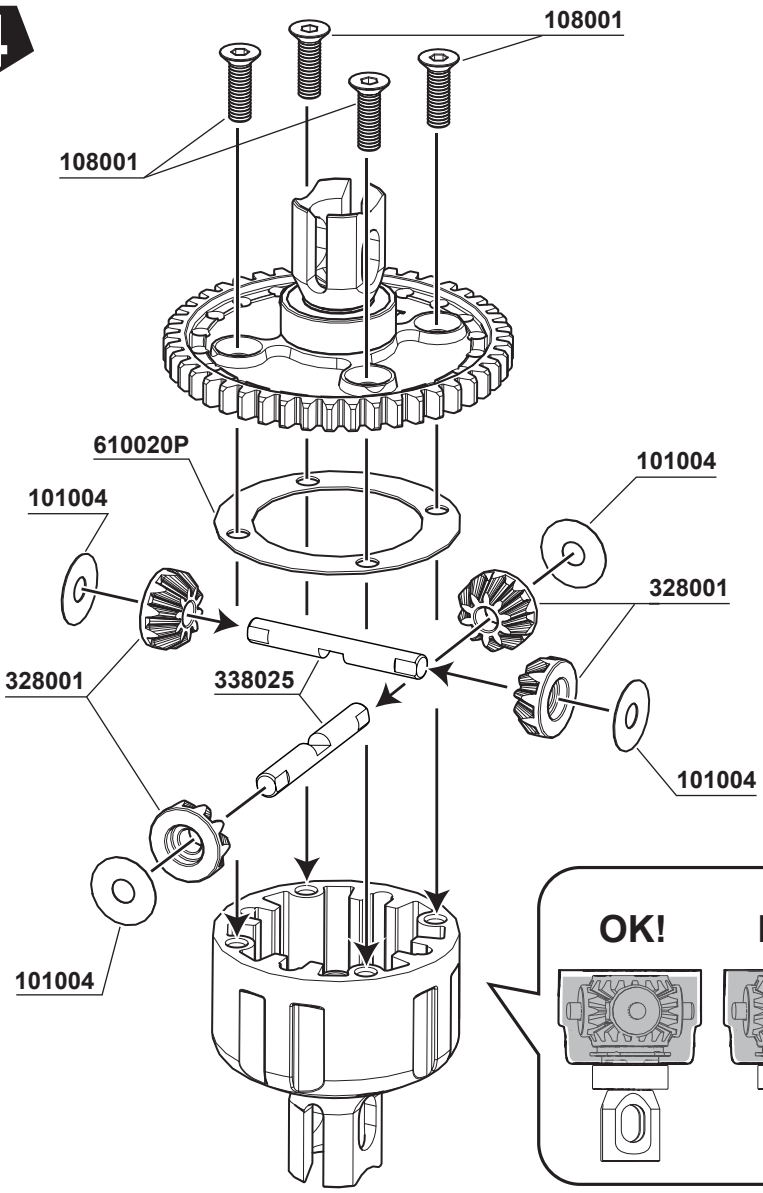

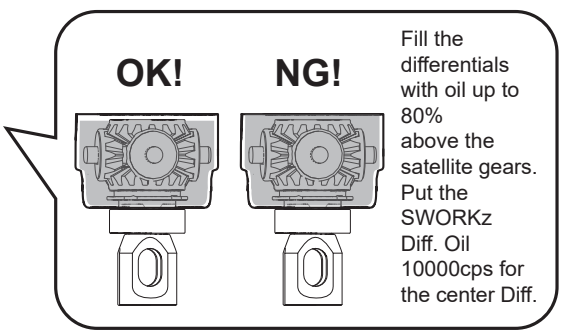

Fill the differentials with oil up to 80% above the satellite gears. Put the SWORKz Diff. Oil 10000cps for the center Diff.

BAG D

5 Front

Pro Tip:
Before installing the M5x4 set screw (104010),
remember to clean the set screw and center driver joint (330661A) first.
Then apply TLC on the set screw.

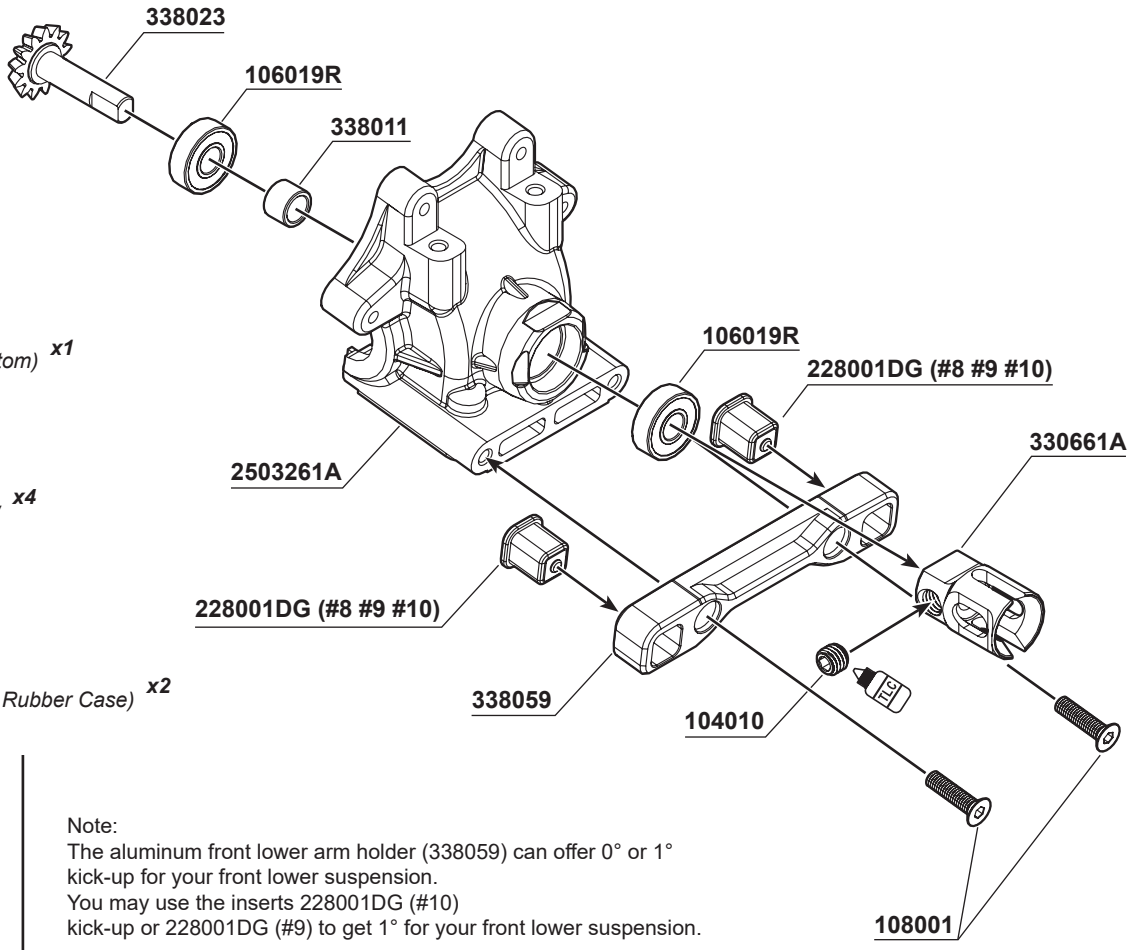

104010
M5x4mm Set Screw (Flat Bottom) ***x1***

108001
M3x12mm FH/ST HEX Screw ***x4***

116019R
Ball Bearing 5x13x4mm (Red Rubber Case) ***x2***

101018
SHIM 13x16x0.2mm ***x4***

Note:
The aluminum front lower arm holder (338059) can offer 0° or 1°
kick-up for your front lower suspension.
You may use the inserts 228001DG (#10)
kick-up or 228001DG (#9) to get 1° for your front lower suspension.

338011
S35 series Pinion Gear Stopper (5x7x5.1mm) ***x1***

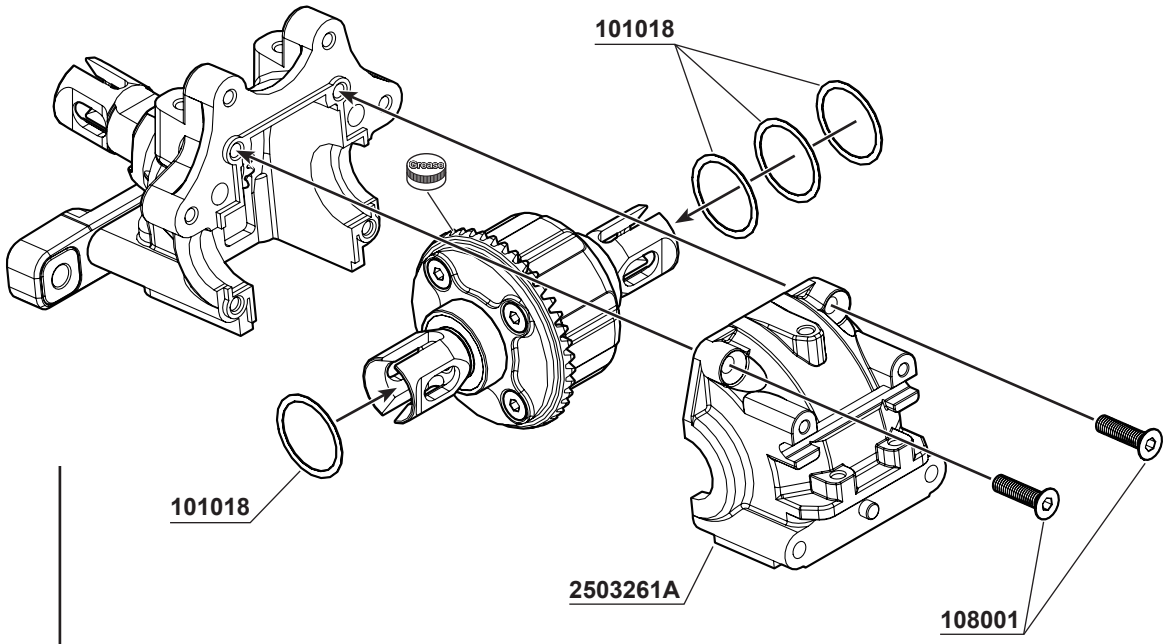

Note:
101018SHIM 13x16x0.2mm
Please use 13x16x0.2mm shims to adjust the play between the crown gear and pinion gear.
Standard suggestion is 1pc shim on the diff crown gear side and 3 pcs on the other side.

6 Rear

Pro Tip:
Before installing the M5x4 set screw (104010), remember to clean the set screw and center driver joint (330661A) first. Then apply TLC on the set screw.

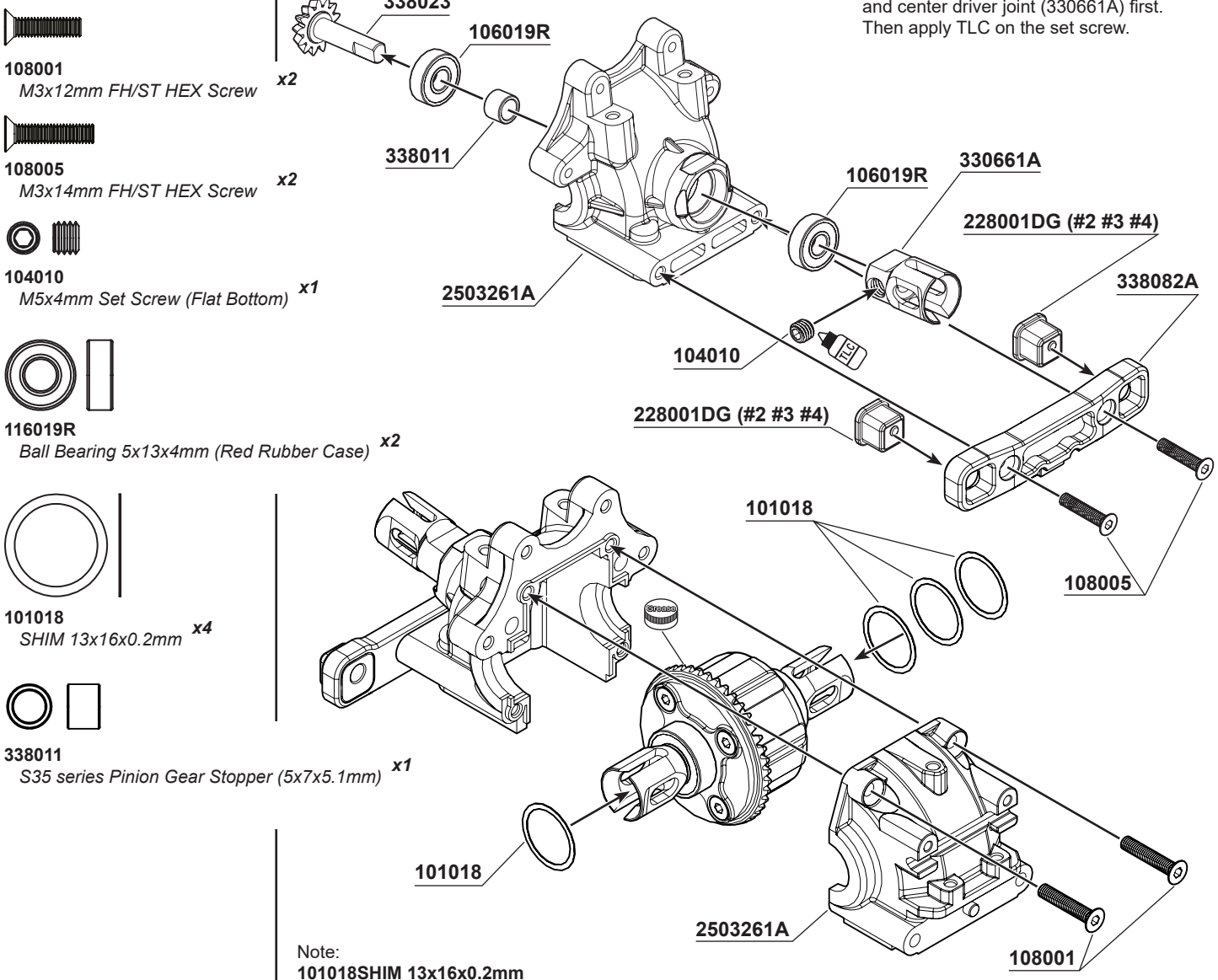

108001
M3x12mm FH/ST HEX Screw ***x2***

108005
M3x14mm FH/ST HEX Screw ***x2***

104010
M5x4mm Set Screw (Flat Bottom) ***x1***

116019R
Ball Bearing 5x13x4mm (Red Rubber Case) ***x2***

101018
SHIM 13x16x0.2mm ***x4***

338011
S35 series Pinion Gear Stopper (5x7x5.1mm) ***x1***

Note:
101018SHIM 13x16x0.2mm
Please use 13x16x0.2mm shims to adjust the play between the crown gear and pinion gear.
Standard suggestion is 1pc shim on the diff crown gear side and 3 pcs on the other side.

BAG E1

7 L R x2

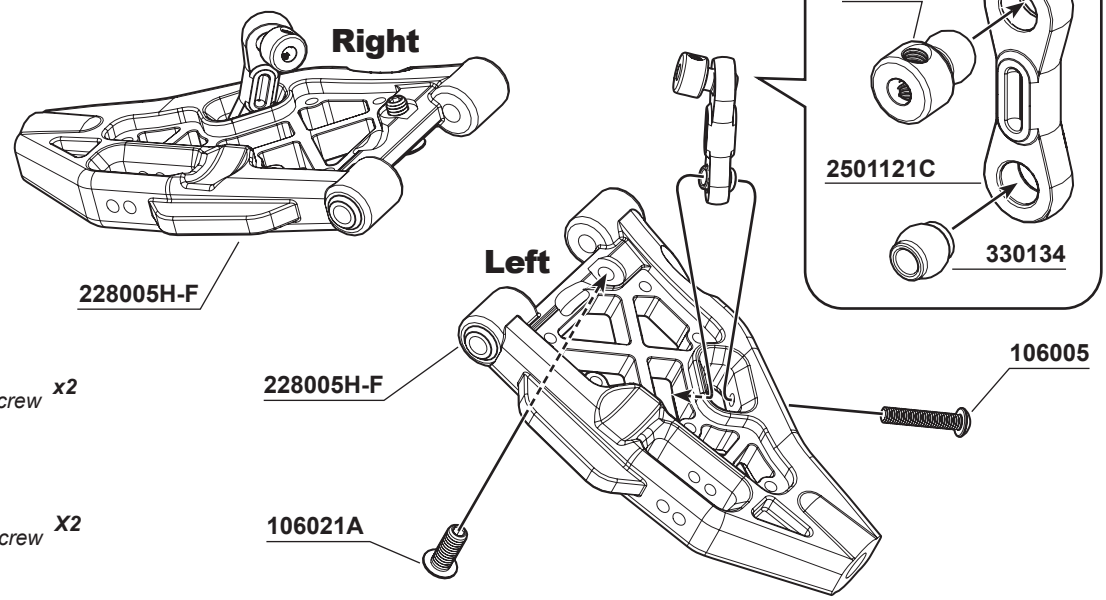

106005
M3x15mm Hex Socket OH/TP Screw ***x2***

106021A
M4x10mm Hex Socket OH/TP Screw ***X2***

BAG E1 8

108008
M3x35mm FH/ST HEX Screw x2

101020A
3mm Countersunk Washers (GM) x2

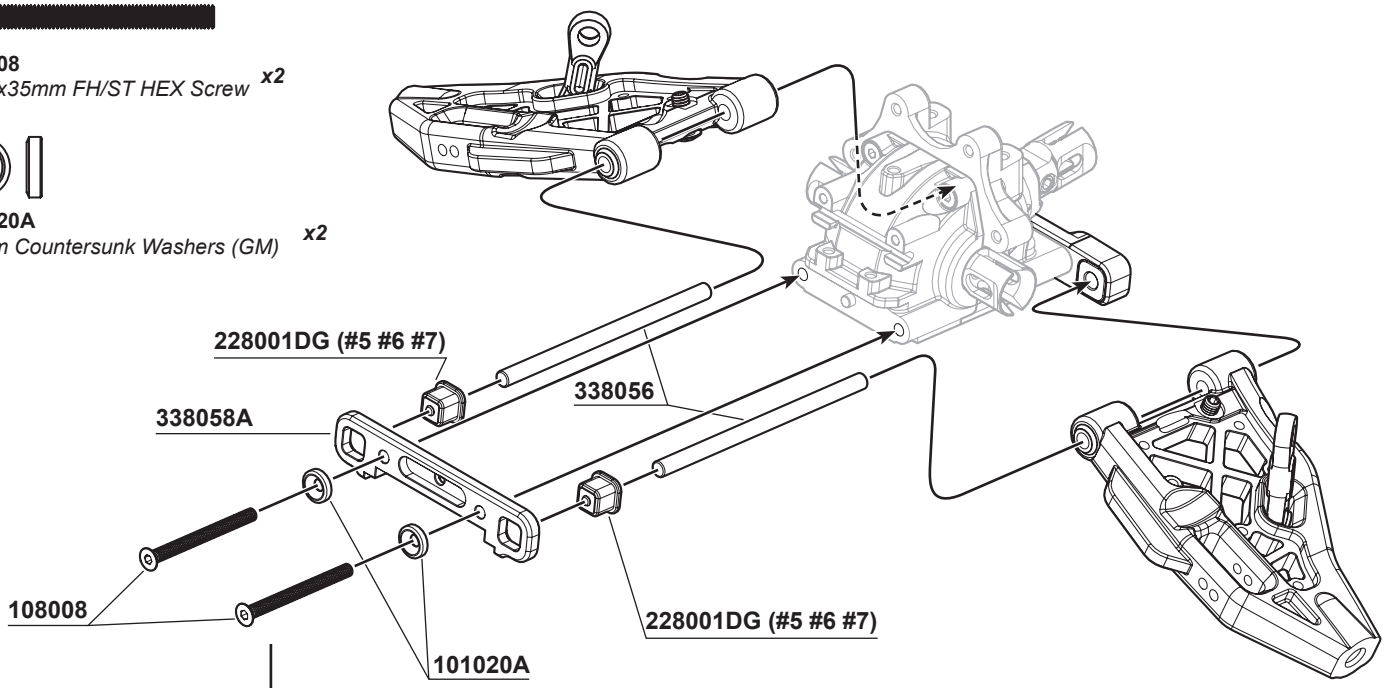

338056
S35-4 Series Lower Arm Hinge Pin (68.5mm) x2

OPTION:
SW-228005S-F S35-4 Series Front Lower Arm in Soft Material (1PC)
SW-228005M-F S35-4 Series Front Lower Arm in Medium Material (1PC)

9

104004
M3x3mm Set Screw x2

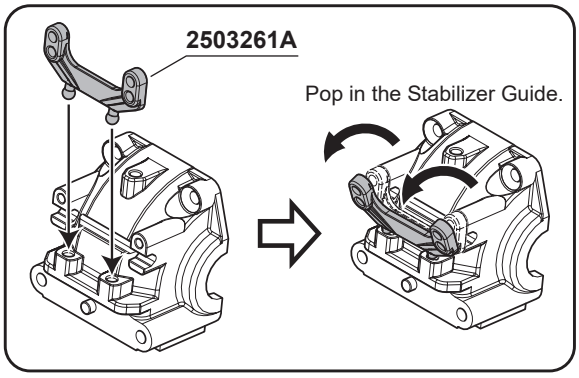

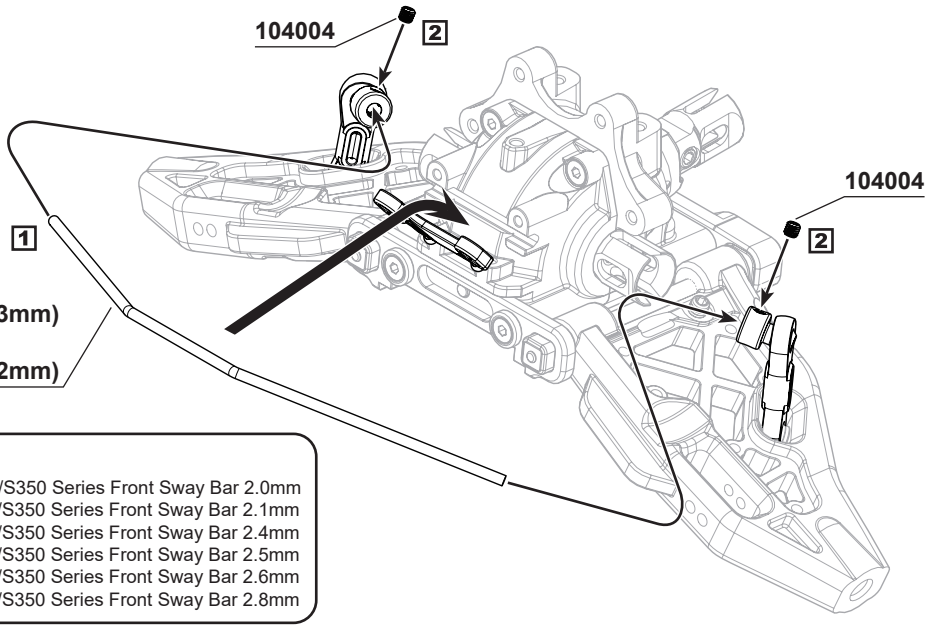

OPTION:
SW-330500A S35/S350 Series Front Sway Bar 2.0mm
SW-115034A S35/S350 Series Front Sway Bar 2.1mm
SW-115150A S35/S350 Series Front Sway Bar 2.4mm
SW-115151A S35/S350 Series Front Sway Bar 2.5mm
SW-115009A S35/S350 Series Front Sway Bar 2.6mm
SW-115010A S35/S350 Series Front Sway Bar 2.8mm

BAG E1

10

104005
M3x4mm Set Screw x2

106013
M2.5x8mmH ex Socket OH/TPScrew x2

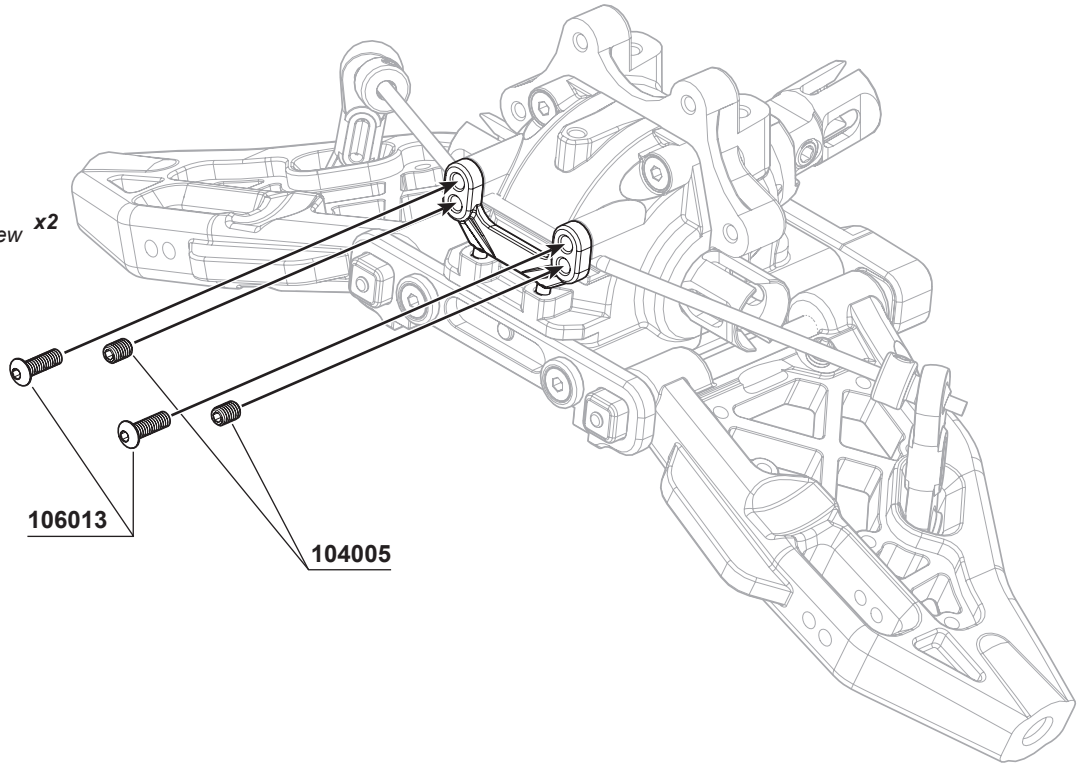

11

L R x2

106002
M3x10mm Hex Socket OH/TP Screw x1

108003
M3x10mm FH/ST HEX Screw x2

108006
M3x8mm FH/ST HEX Screw x2

Note:
The aluminum front upper arm holder (338057A) can offer either 0° or + -1° kick-up for your front upper arm suspension.
You may use the inserts 228001DG (#13) to get 0° kick-up or 228001DG (#12) to get +-1° for your front upper suspension.

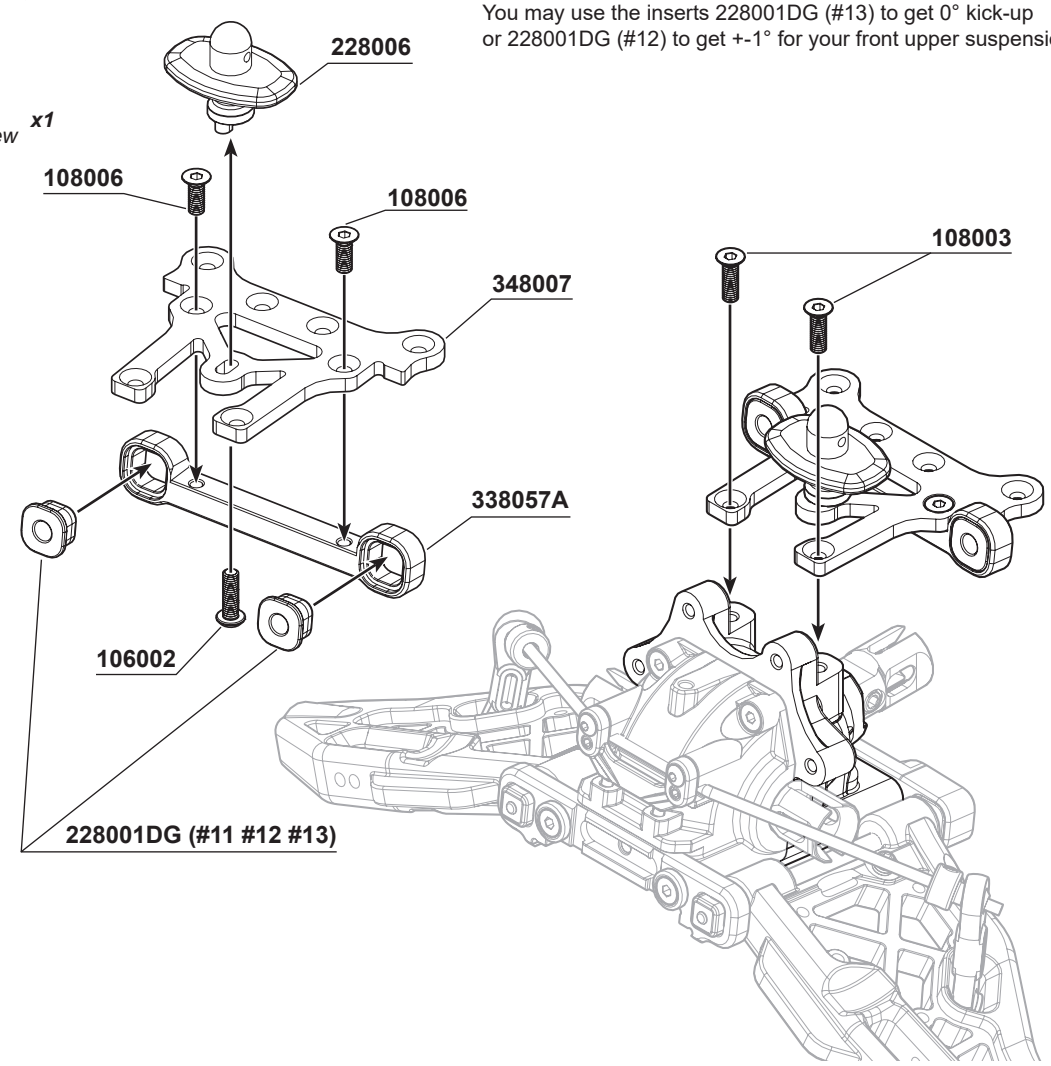

BAG E1

12 L R x2

PRO TIP:
The S35-4 EVO Front Upper Arm Adjust Inserts
can give different steering adjustments (Ackerman).
Put all inserts behind the front upper arms, you will get faster steering response.
Otherwise put all inserts in front of the upper arms,
you will get more stable steering response.
Try to use 2503260-1 or 2503260-3 to adjust the front upper arm position.

108001
M3x12mm FH/ST HEX Screw ***x4***

106015
M3x5mm Hex Socket OH/TP Screw ***x2***

330119
Front Upper Arm Hinge Pin ***x2***

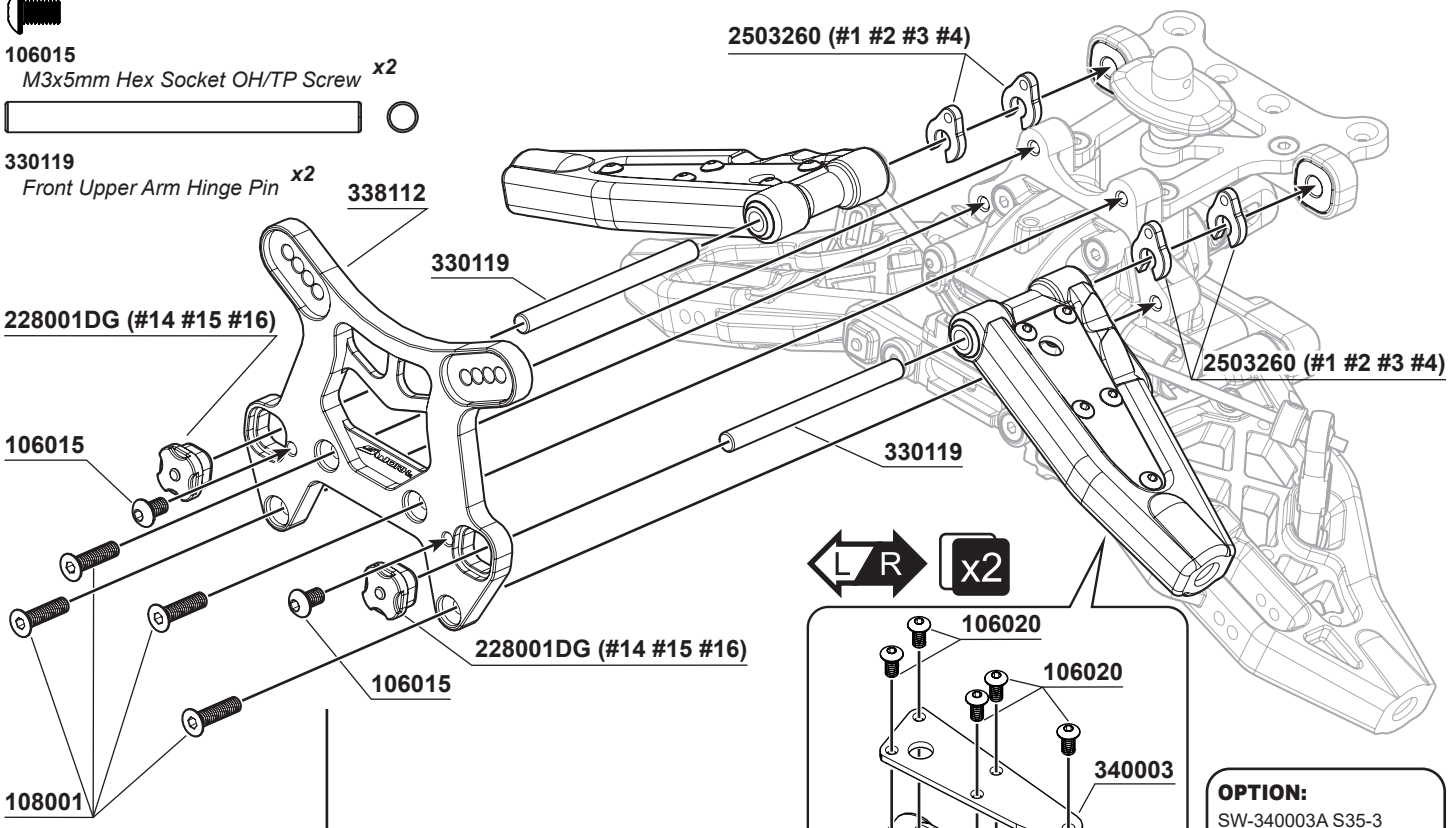

L R x2

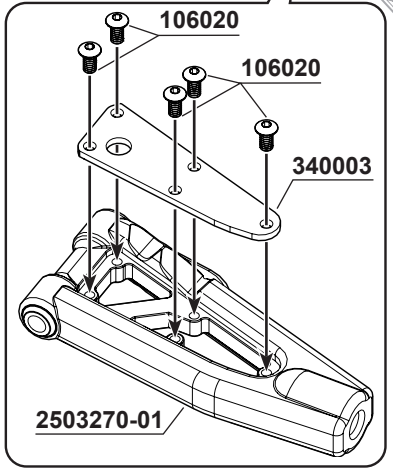

OPTION:
SW-340003A S35-3 Series Pro-composite Carbon Front Upper Arm Cover (1.5mm)(2PC)

OPTION:
SW-2503270-01H S35-3 Series Front Upper Arms With Hard Material (2PC)

Note:
2503260-1
S35-3 Front Upper Arm Adjust Insert (0.9mm)
2503260-2
S35-3 Front Upper Arm Adjust Insert (1.0mm)
2503260-3
S35-3 Front Upper Arm Adjust Insert (1.1mm)
2503260-4
S35-3 Front Upper Arm Adjust Insert (2.0mm)

106020
M2.5x5mm Hex Socket OH/TP Screw ***x10***

13 L R x2

103004
M2.5mm Nut Lock ***x4***

106005
M3x15mm Hex Socket OH/TP Screw ***x2***

106021A
M4x10mm Hex Socket OH/TP Screw ***X2***

106022
M2.5x14mm Soket OH/ST Screw (1.5mmHex) ***X2***

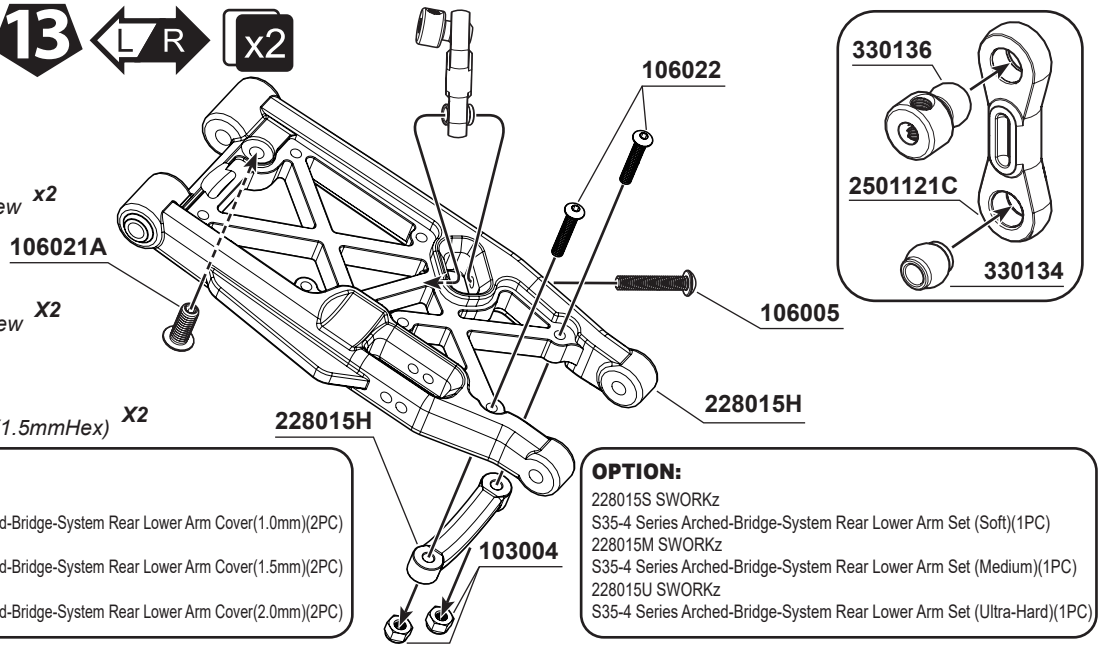

OPTION:
348003-10
SWORKz S35-4 Series Pro-composite Carbon Arched-Bridge-System Rear Lower Arm Cover(1.0mm)(2PC)
348003-15
SWORKz S35-4 Series Pro-composite Carbon Arched-Bridge-System Rear Lower Arm Cover(1.5mm)(2PC)
348003-20
SWORKz S35-4 Series Pro-composite Carbon Arched-Bridge-System Rear Lower Arm Cover(2.0mm)(2PC)

OPTION:
228015S SWORKz
S35-4 Series Arched-Bridge-System Rear Lower Arm Set (Soft)(1PC)
228015M SWORKz
S35-4 Series Arched-Bridge-System Rear Lower Arm Set (Medium)(1PC)
228015U SWORKz
S35-4 Series Arched-Bridge-System Rear Lower Arm Set (Ultra-Hard)(1PC)

BAG E1

14

106002
M3x10mm Hex Socket OH/TP Screw x1

108001
M3x12mm FH/ST HEX Screw x4

108005
M3x14mm FH/ST HEX Screw x2

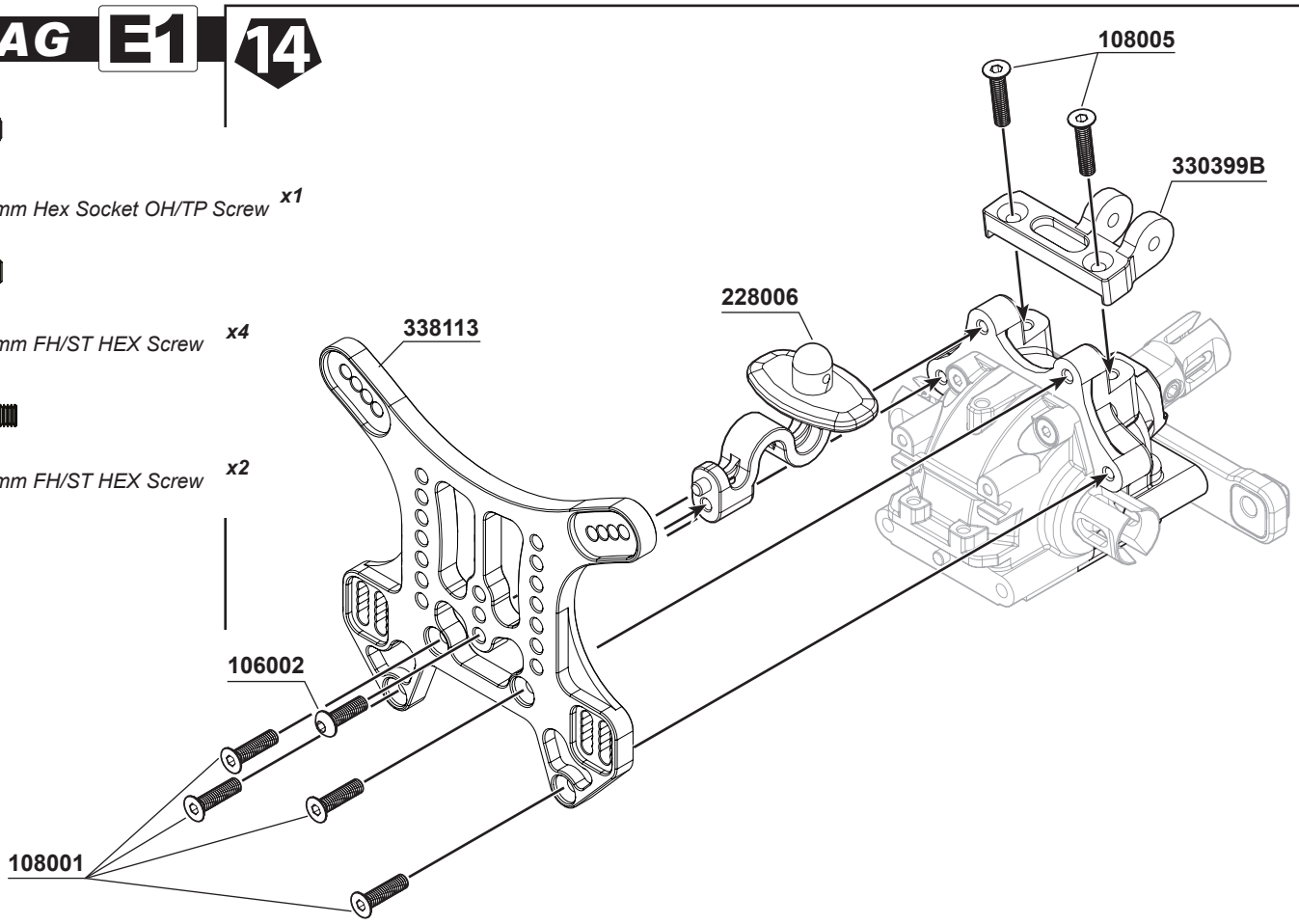

15

108008
M3x35mm FH/ST HEX Screw x2

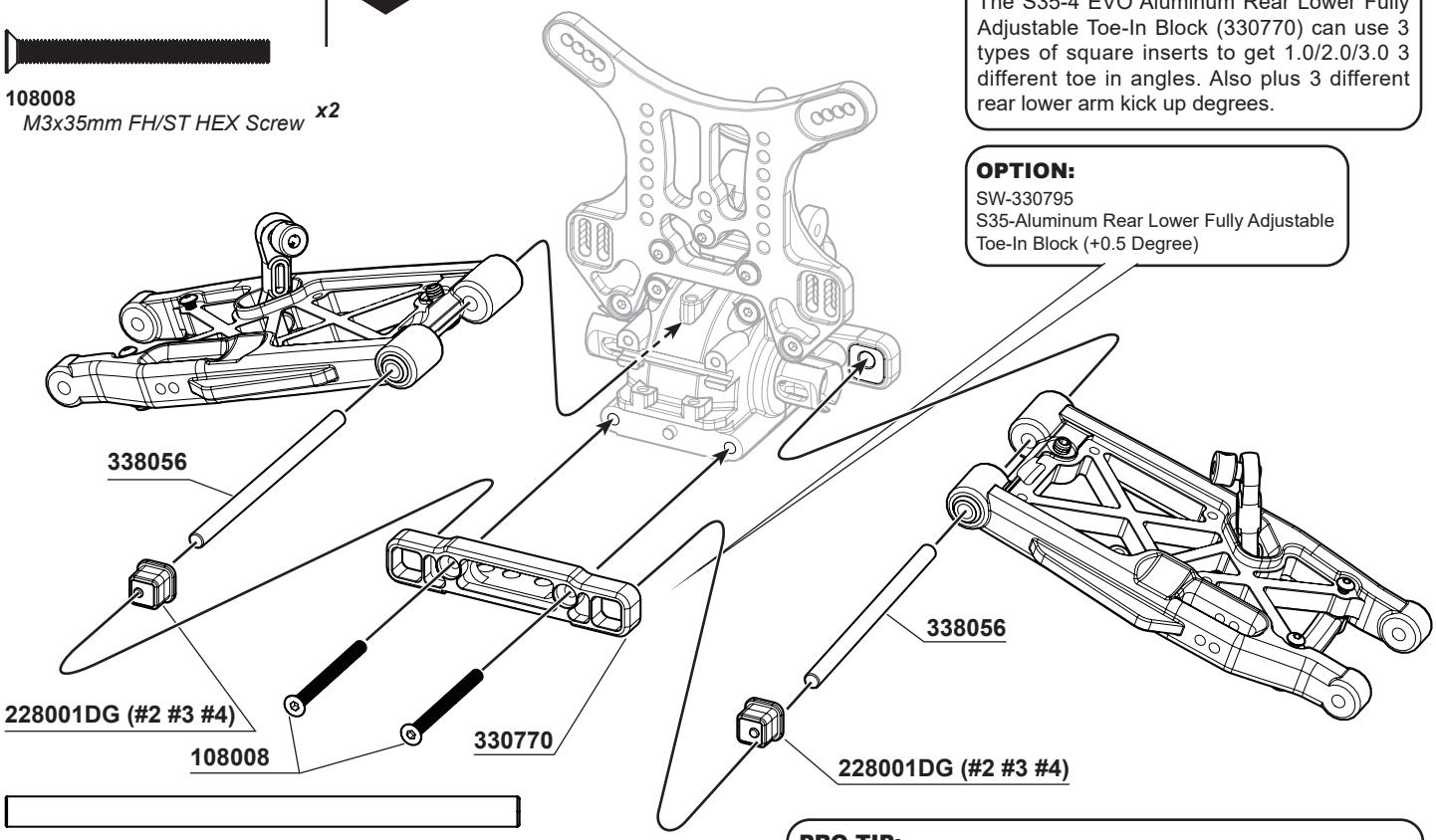

338056
S35-4 Series Lower Arm Hinge Pin (68.5mm) x2

PRO TIP:
The S35-4 EVO Aluminum Rear Lower Fully Adjustable Toe-In Block (330770) can use 3 types of square inserts to get 1.0/2.0/3.0 3 different toe in angles. Also plus 3 different rear lower arm kick up degrees.

OPTION:
SW-330795
S35-Aluminum Rear Lower Fully Adjustable Toe-In Block (+0.5 Degree)

PRO TIP:
228001DG-2 S35-4 Series Rear Lower Arm Holder Square Insert (+1/+1)
228001DG-3 S35-4 Series Rear Lower Arm Holder Square Insert (0/+1)
228001DG-4 S35-4 Series Rear Lower Arm Holder Square Insert (0)

BAG E1

16

104004
M3x3mm Set Screw ***x2***

OPTION:
SW-115046 S35/S350 Series Rear Sway Bar 2.4mm
SW-115047 S35/S350 Series Rear Sway Bar 2.5mm
SW-330499 S35/S350 Series Rear Sway Bar 2.7mm
SW-115007 S35/S350 Series Rear Sway Bar 3.0mm

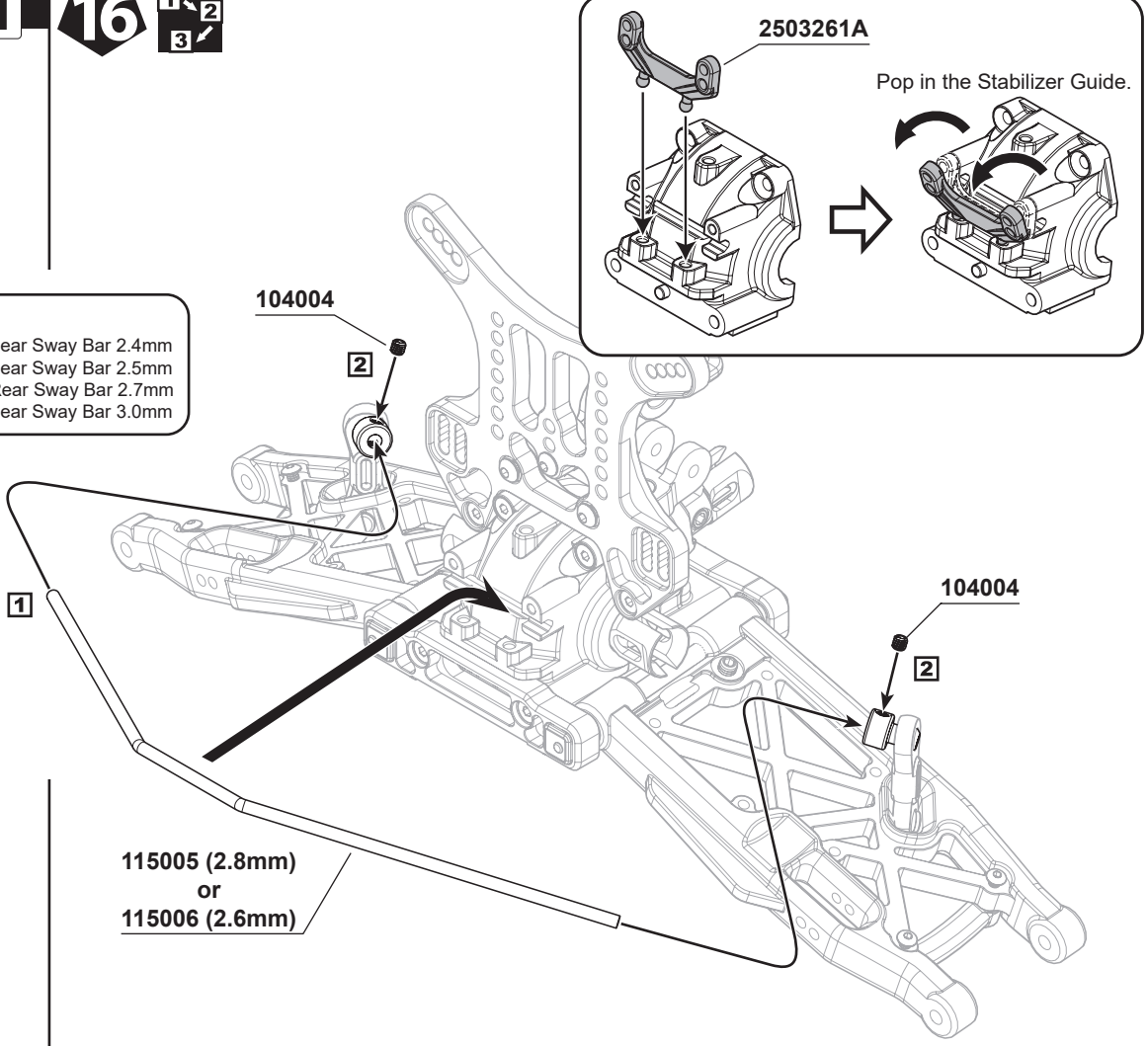

17

104005
M3x4mm Set Screw ***x2***

106013
M2.5x8mmH ex Socket OH/TPScrew ***x2***

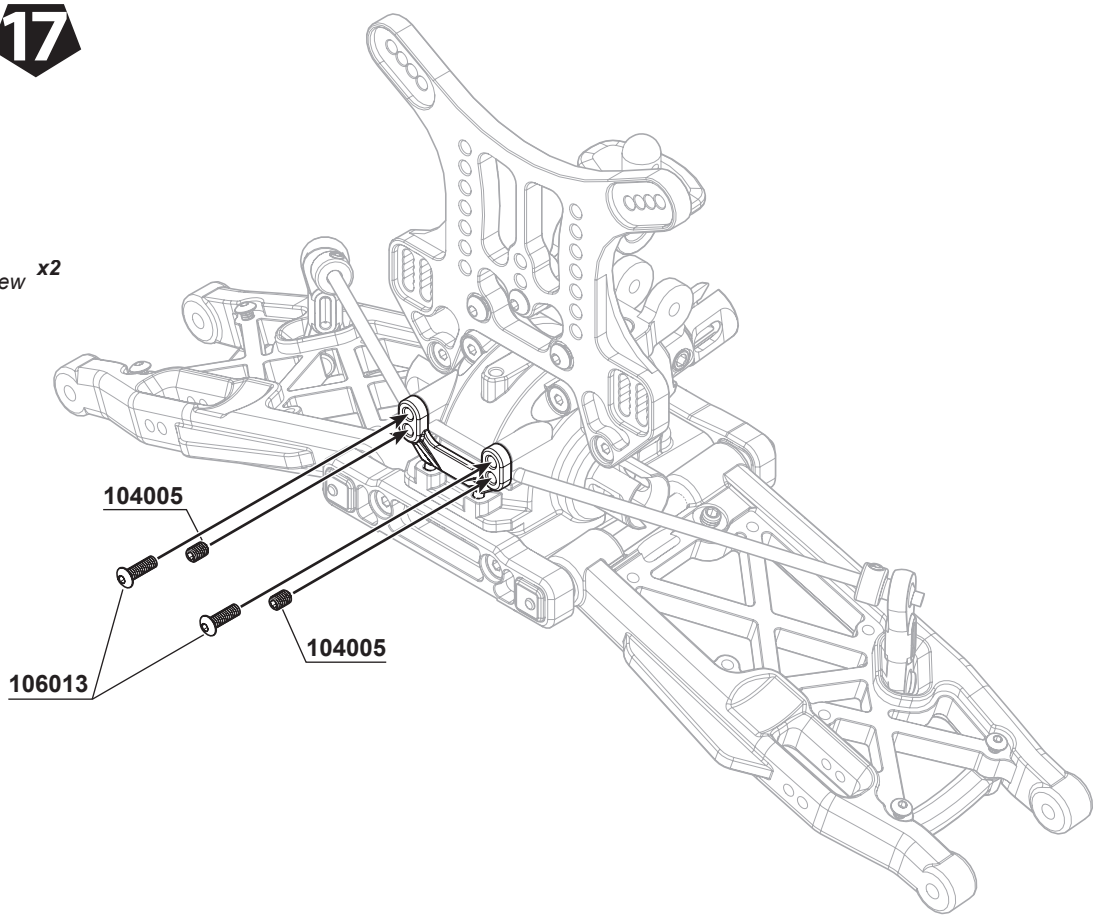

BAG E2

18

103001
M3 Nut Lock x2

101012
M3x6xT0.6mm x2

117003
Flange Ball Bearing 3x6x2.5mm x4

106007
M3x12mm Hex Socket OH/TP Screw(HT) x2

116004R
Ball Bearing 6x10x3mm (Red Rubber Case) x2

105018
M2x6mm Cap Screw x1

PRO TIP:
For some track corner conditions, you may need a big steering angle, there is an option part SW-338124P will give you the solution.

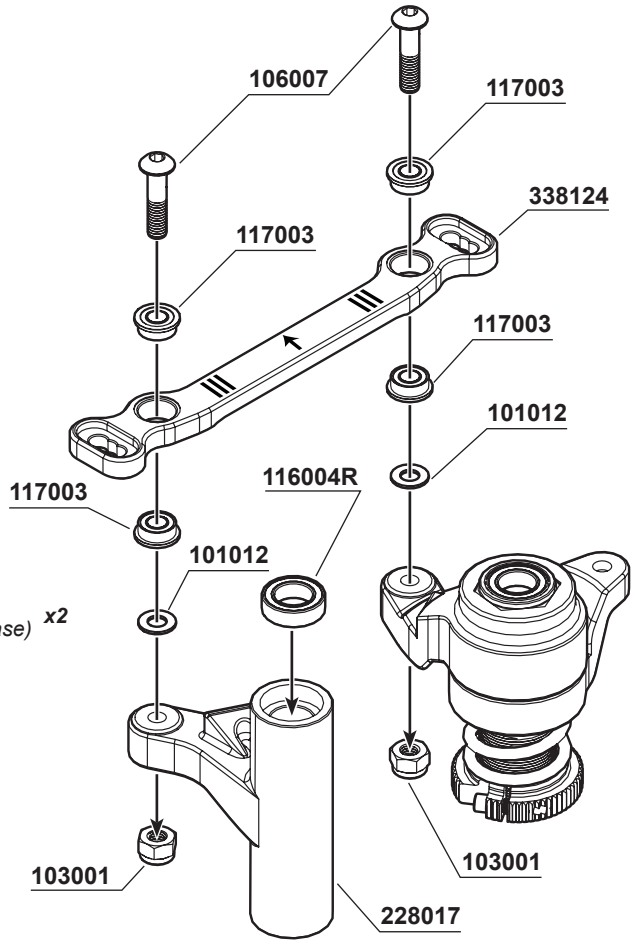

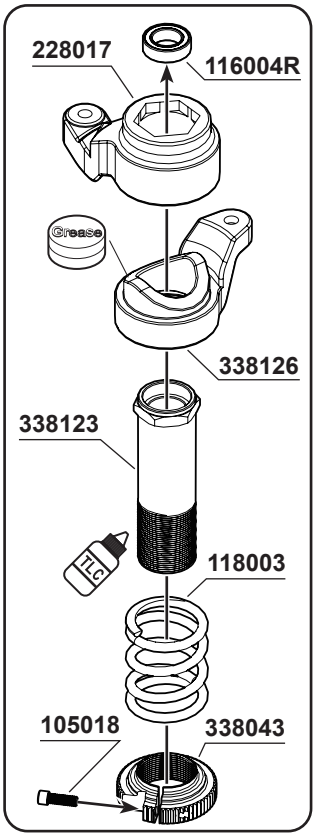

OPTION:
SW-338124P S35-4/e EVO Series T7 Aluminum Pro Steering Plate

BAG E2

19

108003
M3x10mm FH/ST HEX Screw x2

116004R
Ball Bearing 6x10x3mm (Red Rubber Case) x2

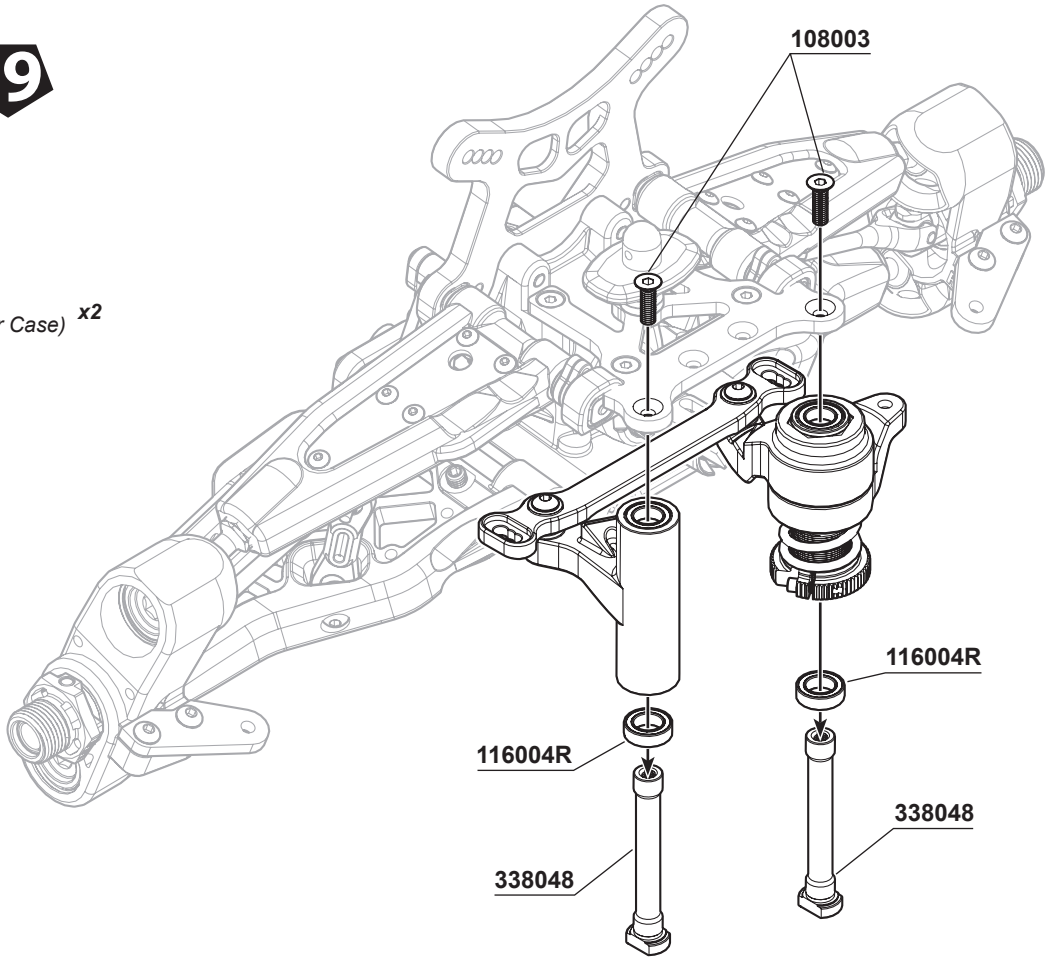

BAG E3

20 L R x2



106002
M3x10mm Hex Socket OH/TP Screw ***x4***

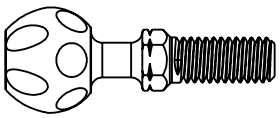

338122L
S35/S350/Apollo Series
Lightened Steering Knuckle
Pivot Ball Turnbuckle (Anti-Clockwise) ***x2***

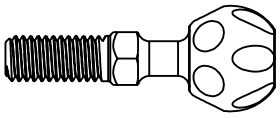

338122R
S35/S350/Apollo Series
Lightened Steering Knuckle
Pivot Ball Turnbuckle (Clockwise) ***x2***

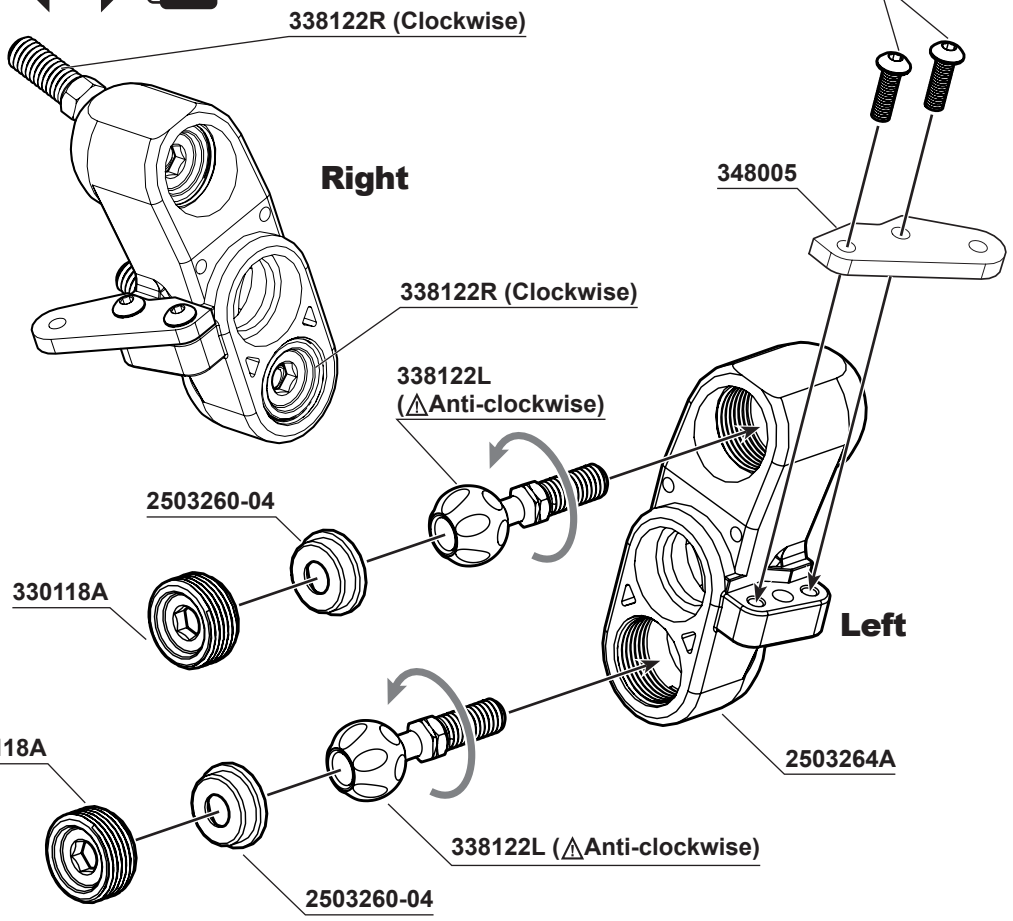

Screw and adjust 330118A Knuckle Pivot Ball Nut so as the pivot ball can be moved smoothly.

21 1 2 3 L R x2



116006R
Ball Bearing 8x16x5mm (Red Rubber Case) ***x4***



104010
M5x4mm Set Screw (Flat Bottom) ***x2***

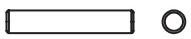

330124
Pin M3.0x16.8mm ***x2***



101018
SHIM 13x16x0.2mm ***x2***

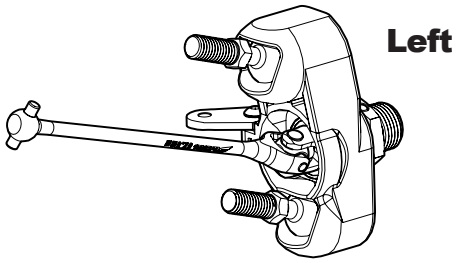

OPTION:
SWC-218007A
S35 Series Evolution-CVA Drive Shaft Set 92.5mm (1 Set)

SWC-218007D
S35 Series Advance-CVD Drive Shaft Set 92.5mm (1 Set)

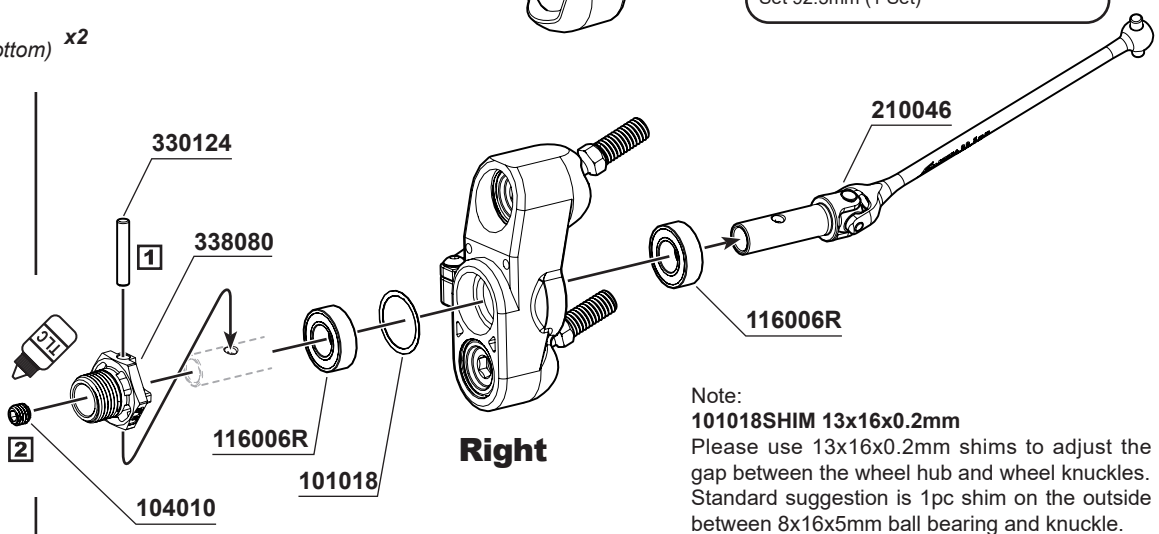

Note:
101018SHIM 13x16x0.2mm
Please use 13x16x0.2mm shims to adjust the gap between the wheel hub and wheel knuckles. Standard suggestion is 1pc shim on the outside between 8x16x5mm ball bearing and knuckle.
If the wheel hub still has big play with knuckle, please try to put another shim in another side between ball bearing and knuckle.

BAG E3 22

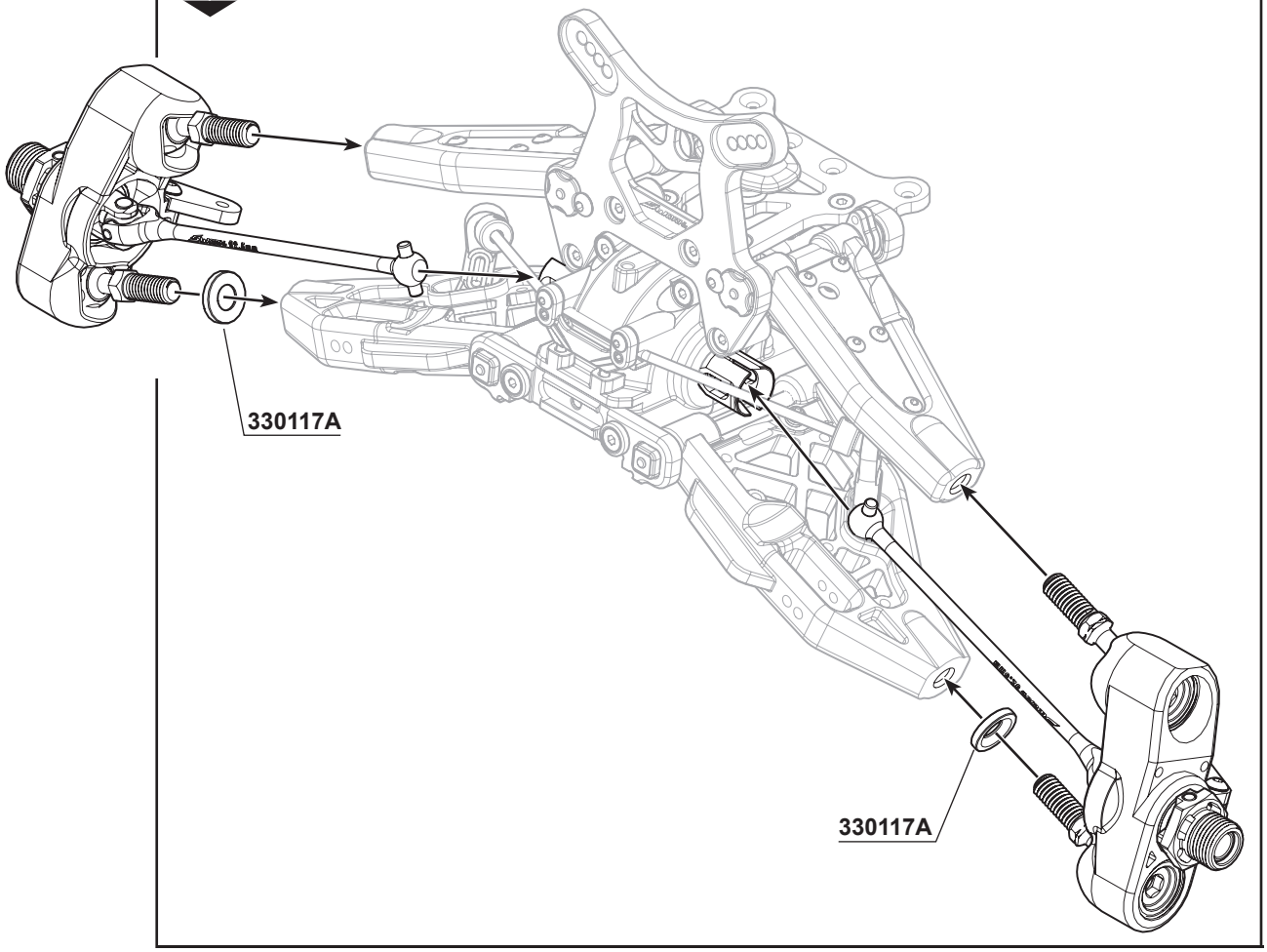

BAG E3 23



104010
M5x4mm Set Screw (Flat Bottom) x2

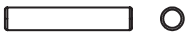

330124
Pin M3.0x16.8mm x2



116006R
Ball Bearing 8x16x5mm (Red Rubber Case) x4



106009
M3x25mm Hex Socket OH/TP Screw x4



103001
M3 Nut Lock x4

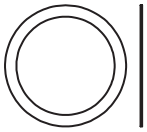

101018
SHIM 13x16x0.2mm x2

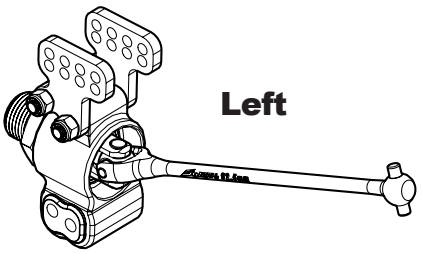

OPTION:
SWC-218007A
S35 Series Evolution-CVA Drive Shaft Set 92.5mm (1 Set)

SWC-218007D
S35 Series Advance-CVD Drive Shaft Set 92.5mm (1 Set)

OPTION:
SW-338075
S35-4 Series T7 Aluminum Rear Wheel Hub With BB Insert (R=L) (1PC)

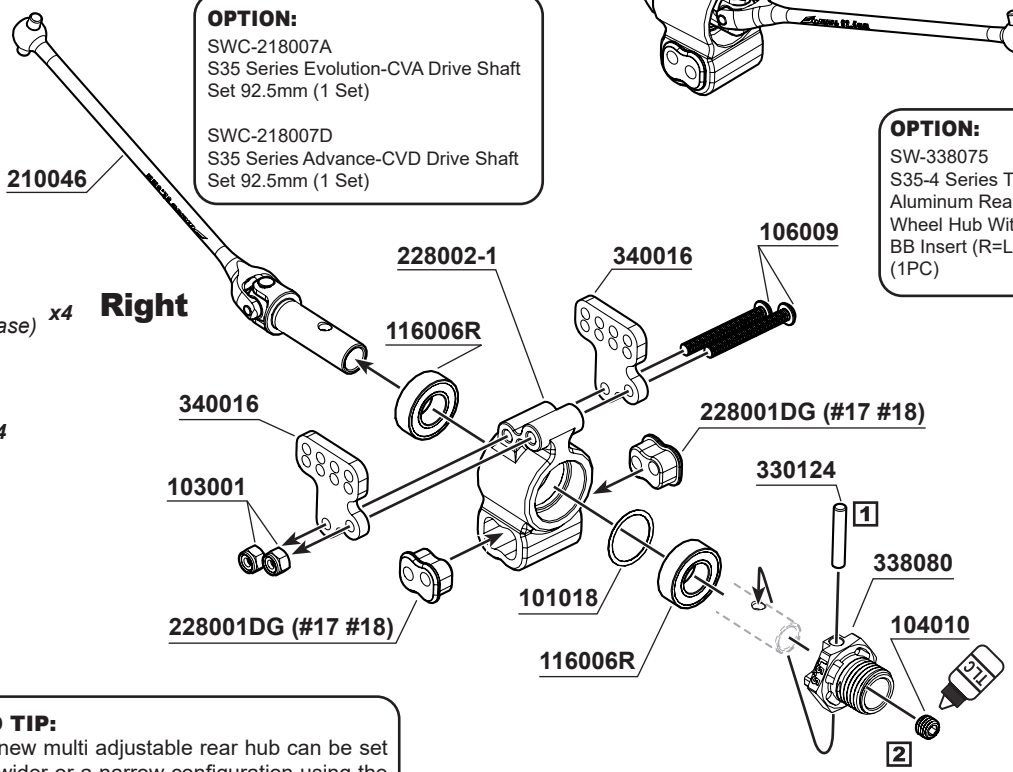

PRO TIP:
The new multi adjustable rear hub can be set to a wider or a narrow configuration using the inserts 228001DG (#17 #18)

BAG E3 24

PRO TIP:
The base set up is always by using 2-3mm inserts on the rear of Hub Carriers Hinge Pins.
The wheel base length should be around 325-330mm.

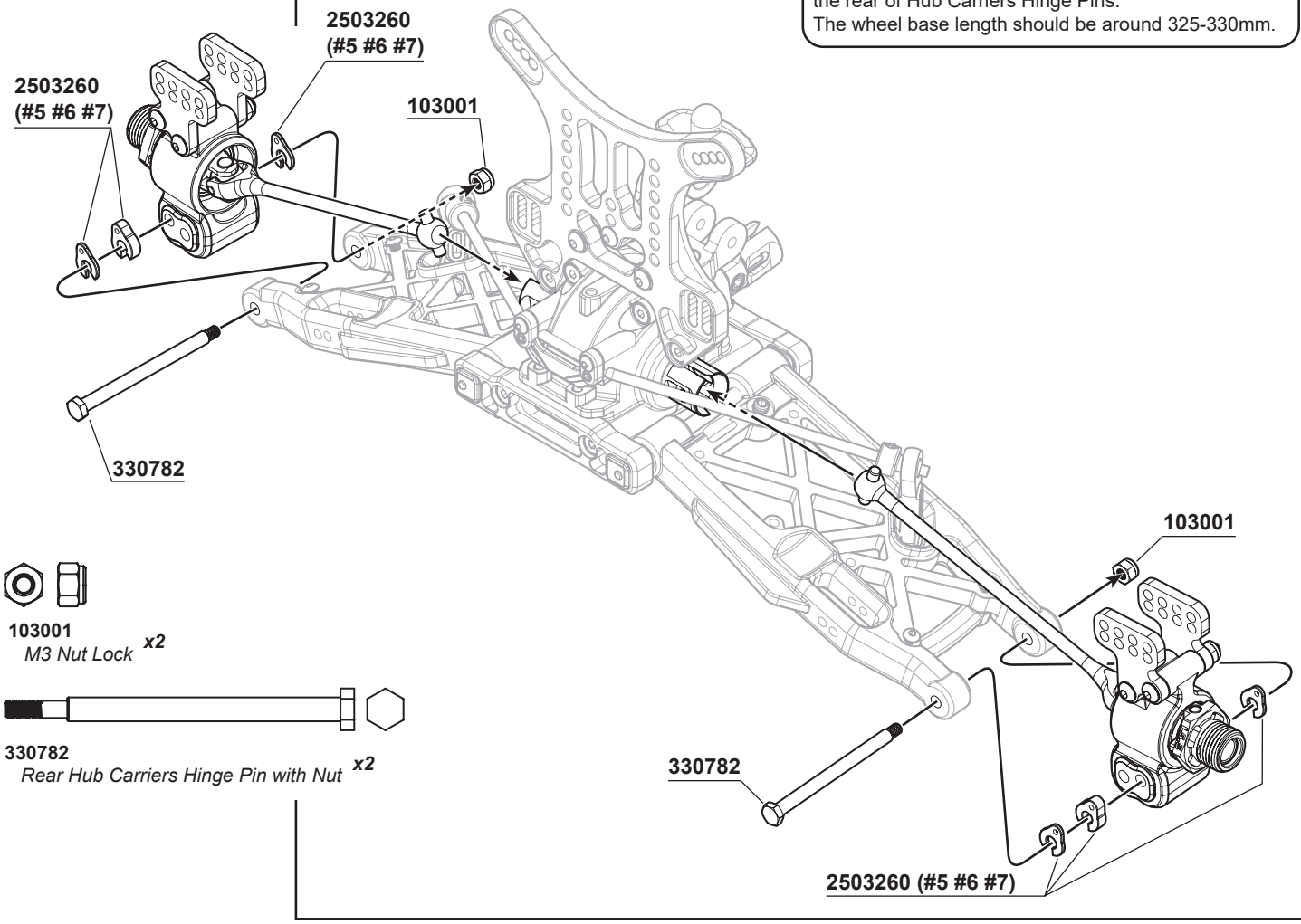

103001
M3 Nut Lock ***x2***

330782
Rear Hub Carriers Hinge Pin with Nut ***x2***

25 L R x2



330123A
Rear Upper Sus. Arm Turnbuckles ***x2***

Shorty Upper Arm Linkage Set-up

1:1

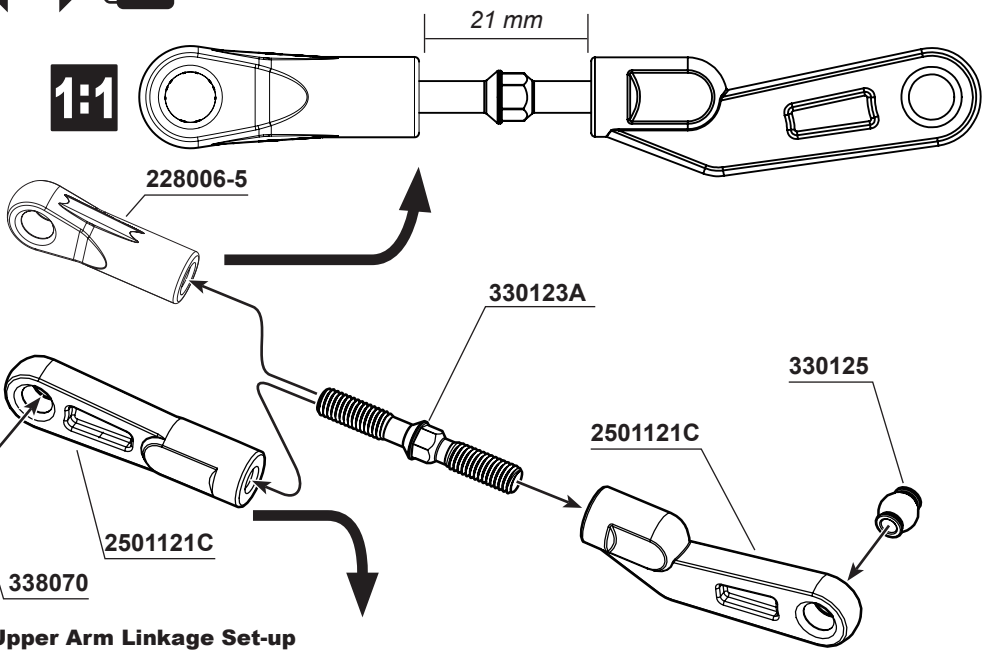

1:1

Longer Upper Arm Linkage Set-up

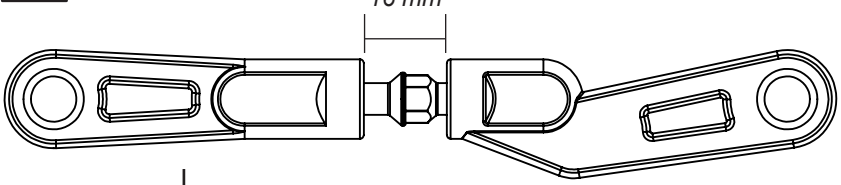

PRO TIP:
The Shorty Upper Arm Linkage Set-up is good using for low grip condition.

The Longer Upper Arm Linkage Set-up is good using for high grip condition.

BAG E3

26 L R x2

105012
M3x10mm Cap Screw x2

106009
M3x25mm Hex Socket OH/TP Screw x2

103001
M3 Nut Lock x2

OPTION:
SWC-338017
S35 Series T-6061AL Rear Hub Carry Insert (6mm)(2pc)

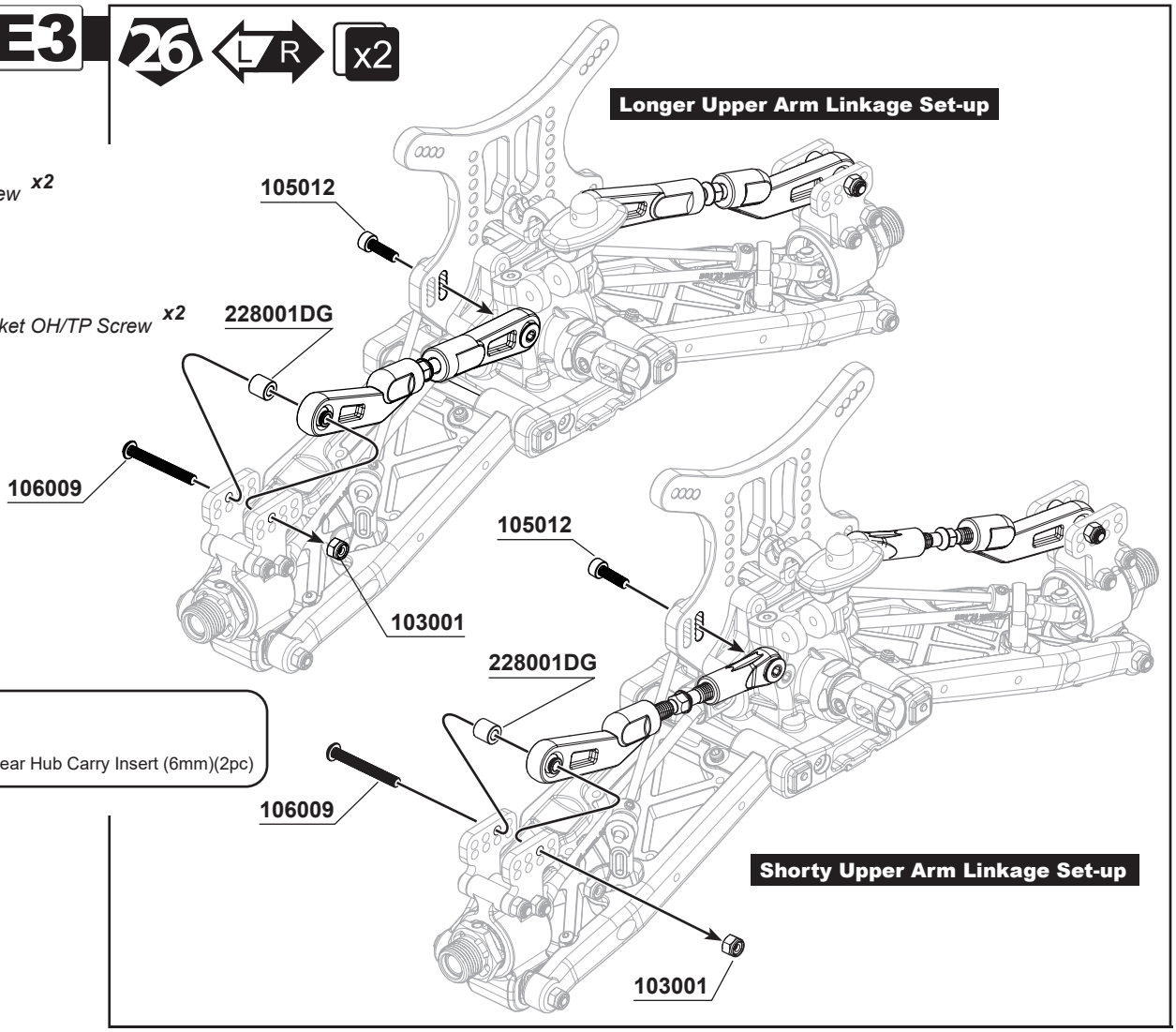

27

103001
M3 Nut Lock x6

106003
M3x16mm Hex Socket OH/TP Screw x4

108019
M2.6x6mm Flat Head Screw - Hex Socket x2

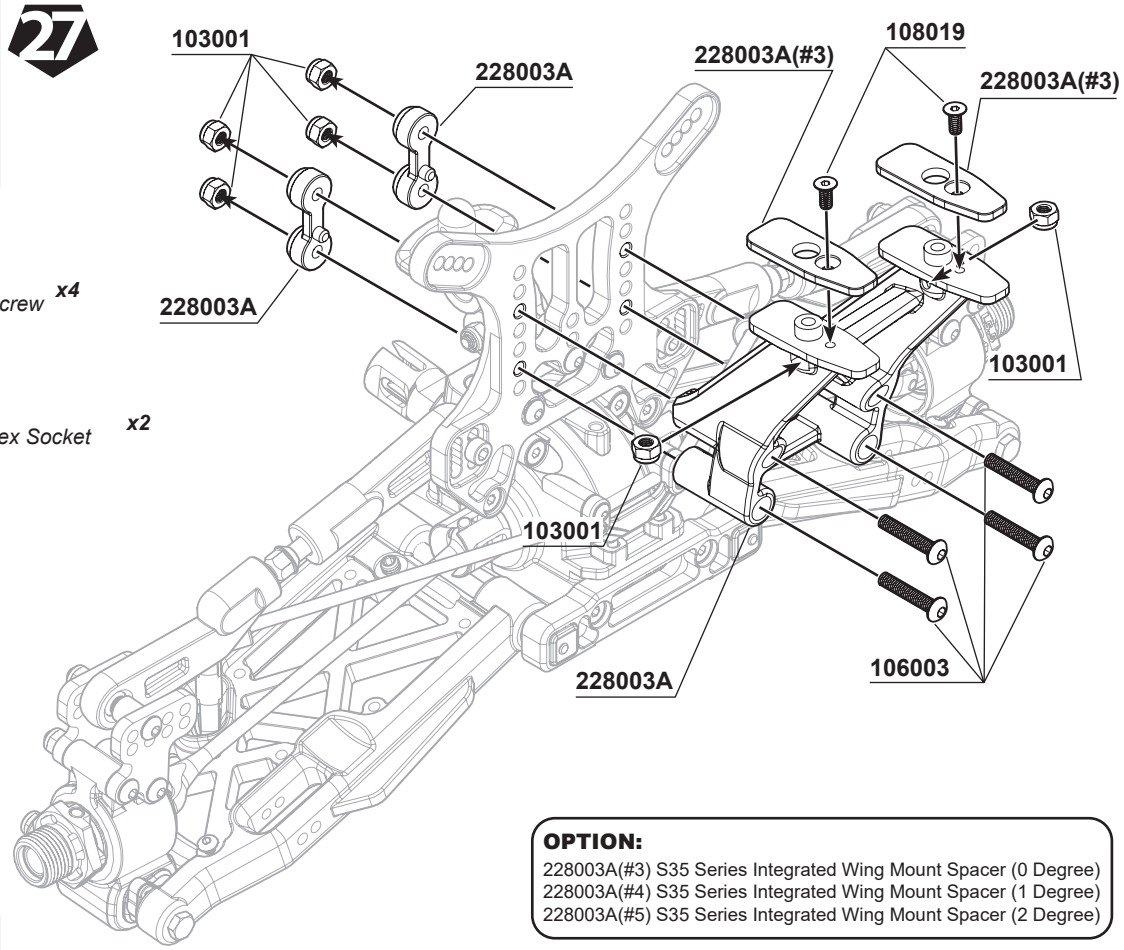

OPTION:
228003A(#3) S35 Series Integrated Wing Mount Spacer (0 Degree)
228003A(#4) S35 Series Integrated Wing Mount Spacer (1 Degree)
228003A(#5) S35 Series Integrated Wing Mount Spacer (2 Degree)

BAG F

28



108007
M3x6mm FH/ST HEX Screw ***x10***

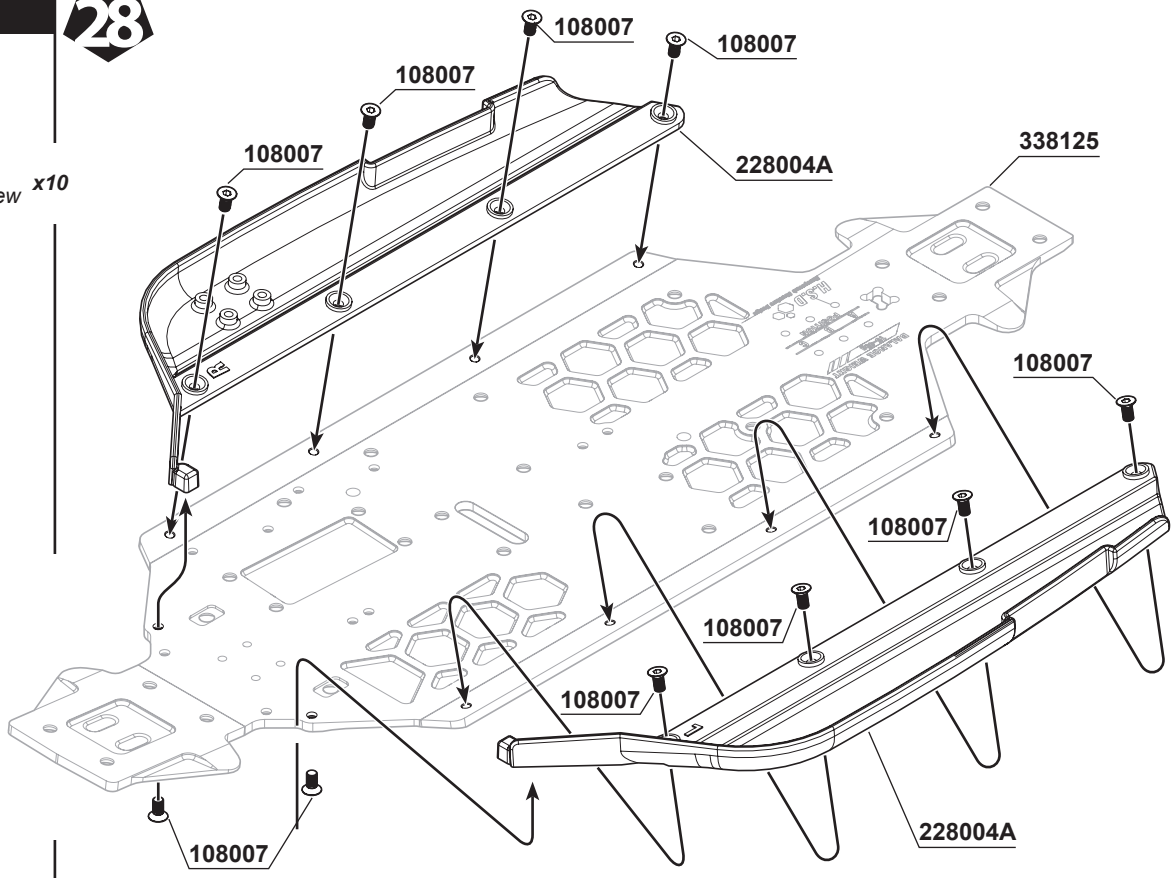

29



108003
M3x10mm FH/ST HEX Screw ***x2***



108010
M4x10mm FH/ST HEX Screw ***x2***



108012
M4x16mm FH/ST HEX Screw ***x4***

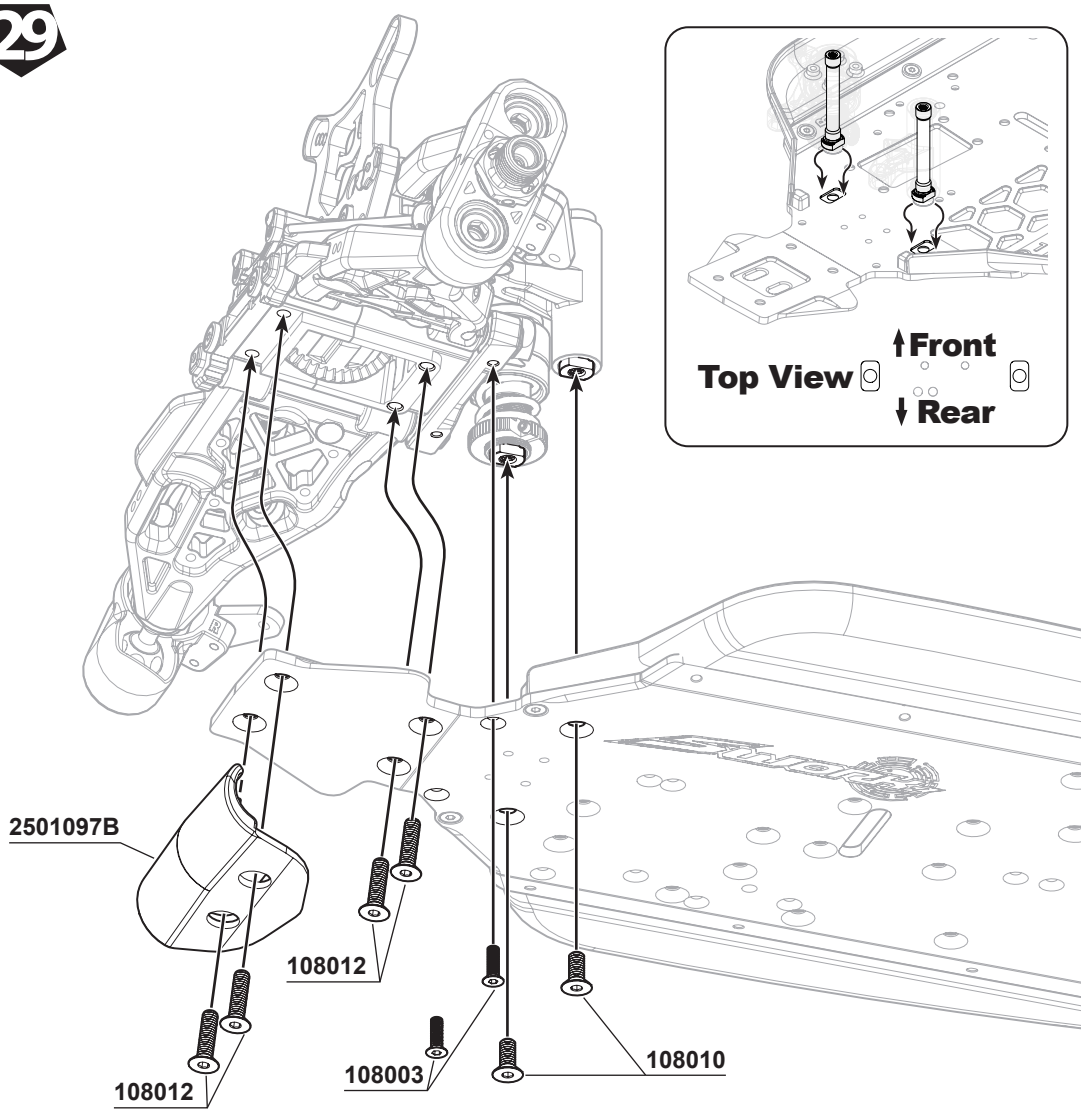

BAG F

106002
M3x10mm Hex Socket OH/TP Screw x2

106006
M3x20mm Hex Socket OH/TP Screw x2

106008
M3x12mm Hex Socket OH/TP Screw x2

106010
M3x6mm Hex Socket OH/TP Screw x2

104011
M4x4mm Set Screw (Flat Bottom) x1

106024
M4x12mm Hex Socket OH/TP Screw x2

105020
M4x10mm Cap Screw x2

30

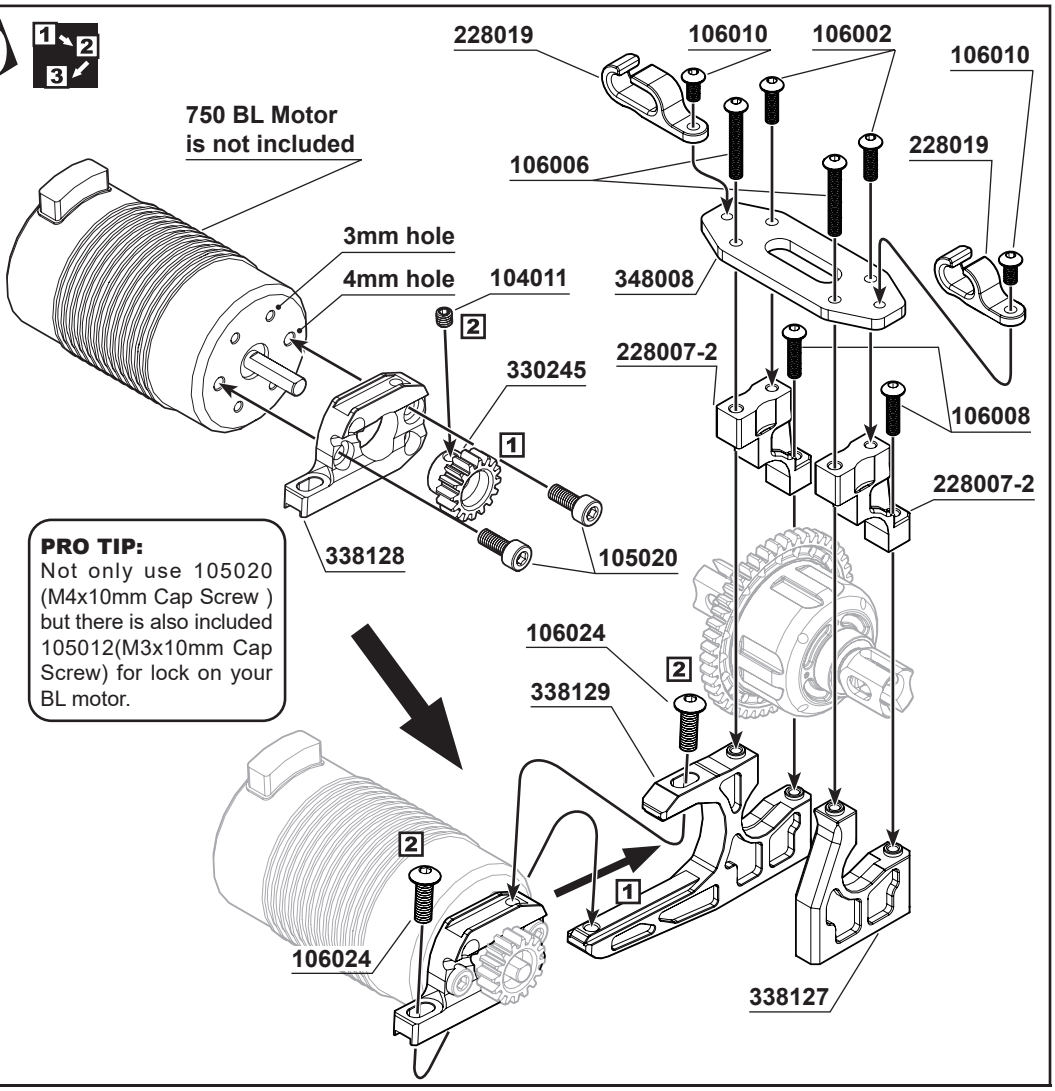

PRO TIP:
Not only use 105020 (M4x10mm Cap Screw) but there is also included 105012(M3x10mm Cap Screw) for lock on your BL motor.

31

108003
M3x10mm FH/ST HEX Screw x3

108010
M4x10mm FH/ST HEX Screw x4

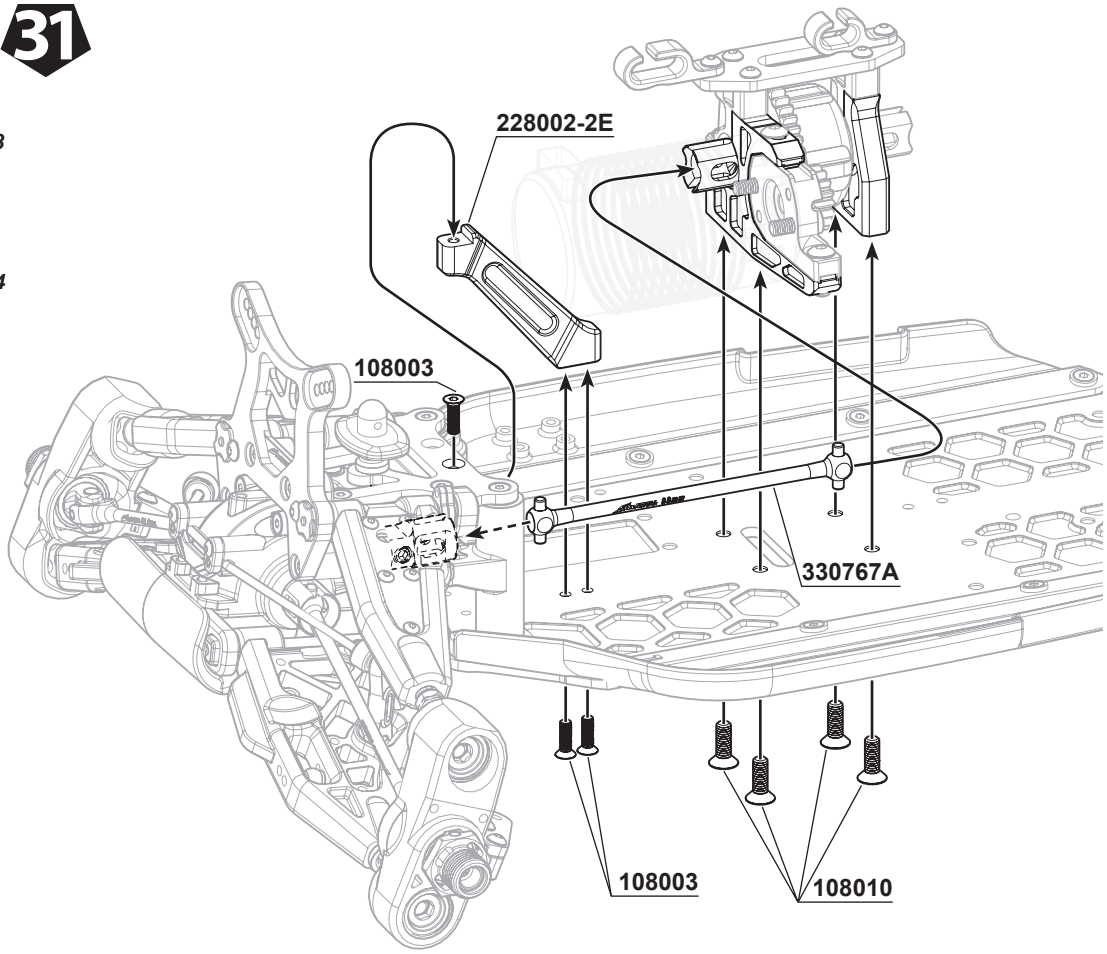

BAG F

32



106006
M3x20mm Hex Socket OH/TP Screw ***x2***



108003
M3x10mm FH/ST HEX Screw ***x2***



108012
M4x16mm FH/ST HEX Screw ***x4***



103001
M3 Nut Lock ***x1***

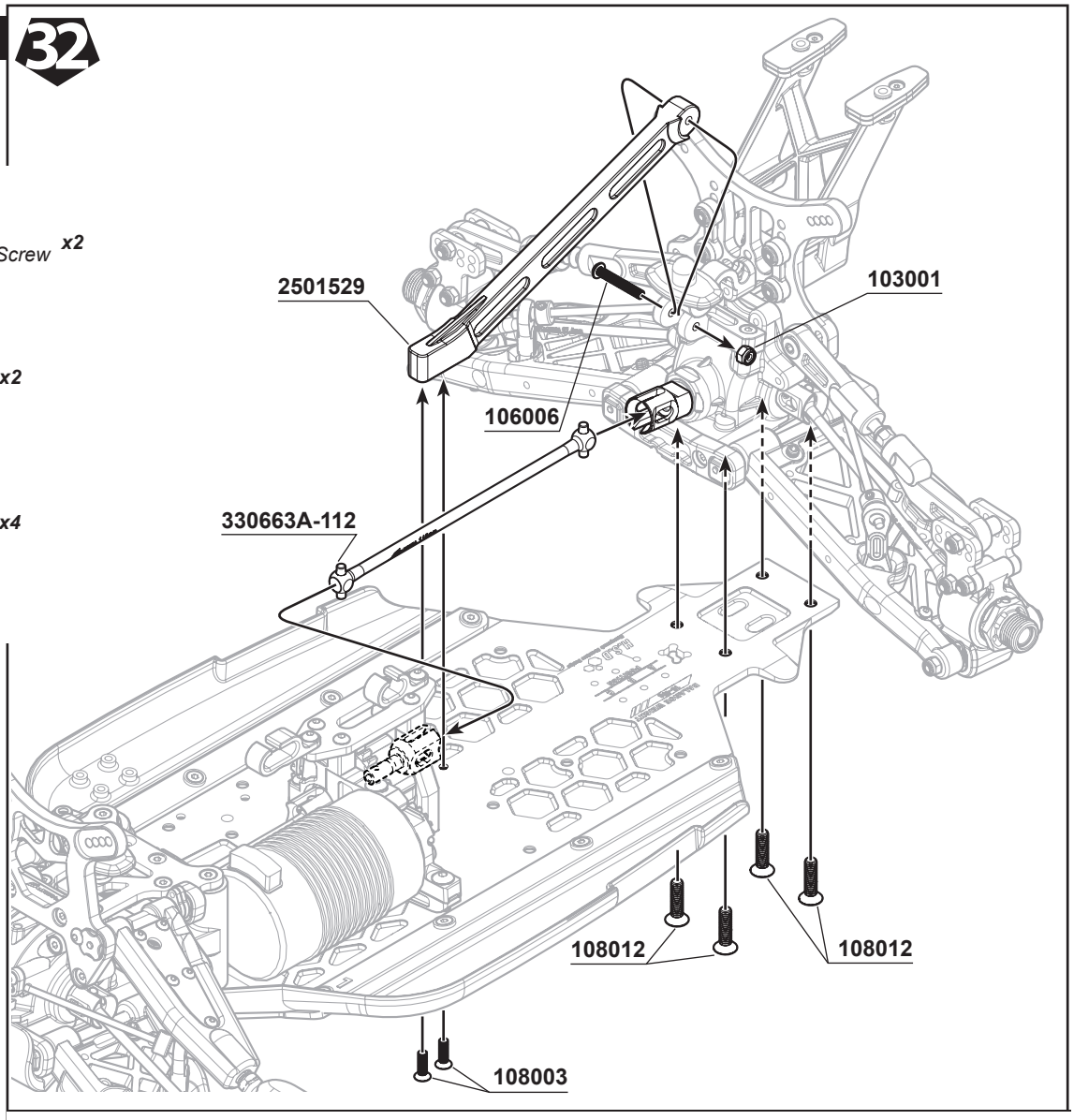

33



108013
M4x8mm FH/ST HEX Screw ***x2***

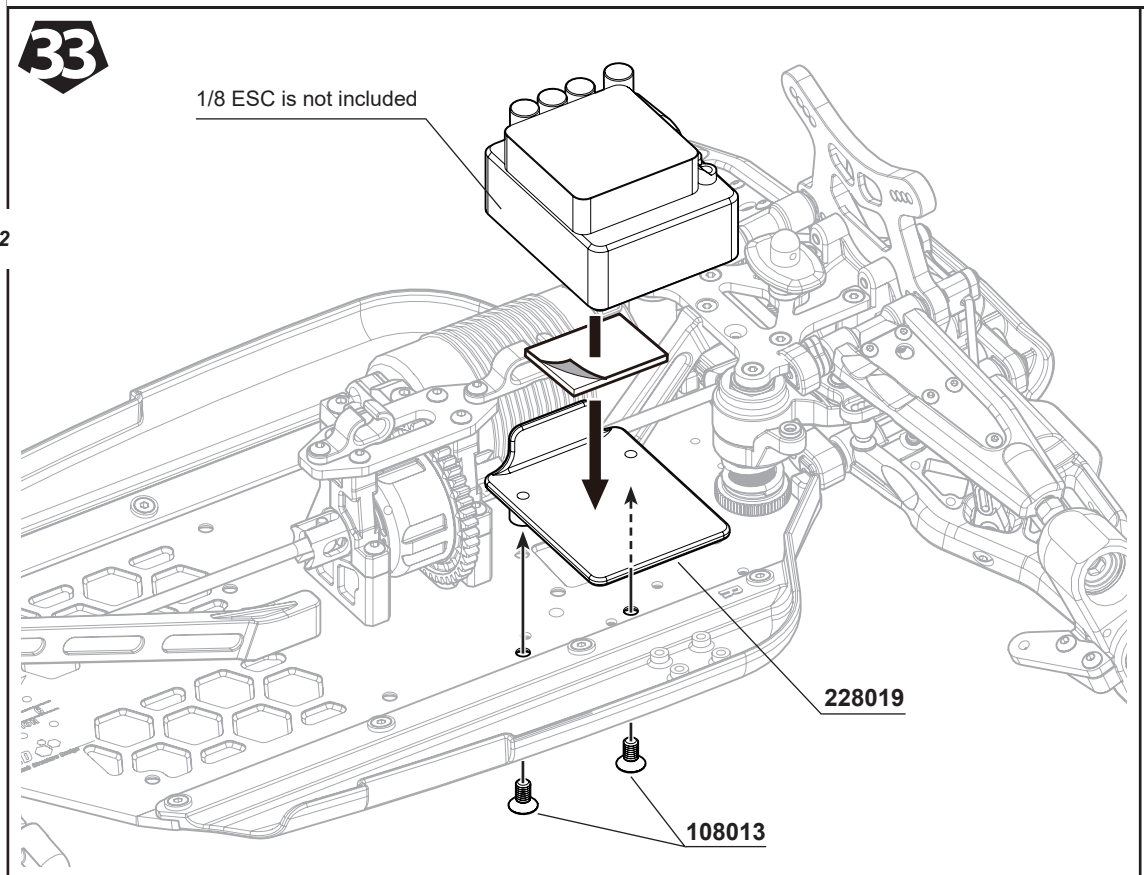

BAG F

34 Saddle Pack Battery Chassis Assembly

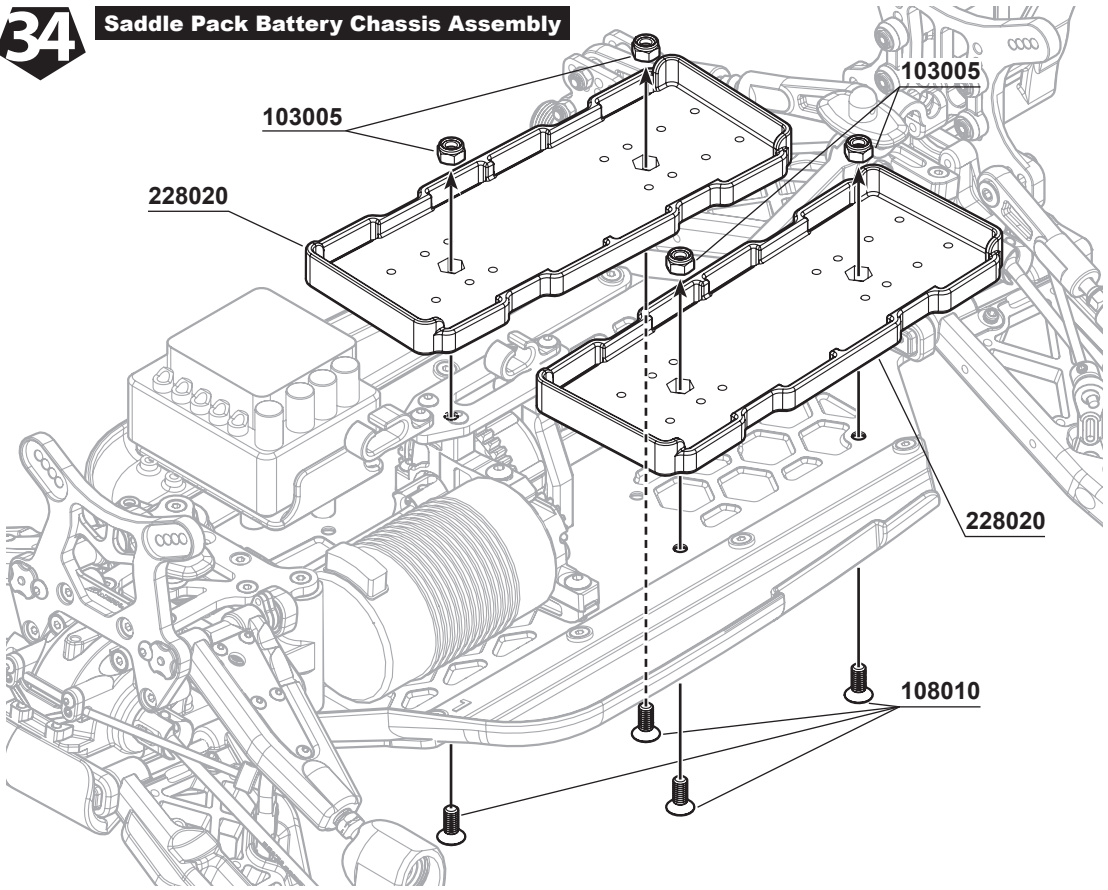

108010
M4x10mm FH/ST HEX Screw ***x4***

103005
M4 Nut Lock ***x4***

35 S14.8 4S Pack Battery Assembly

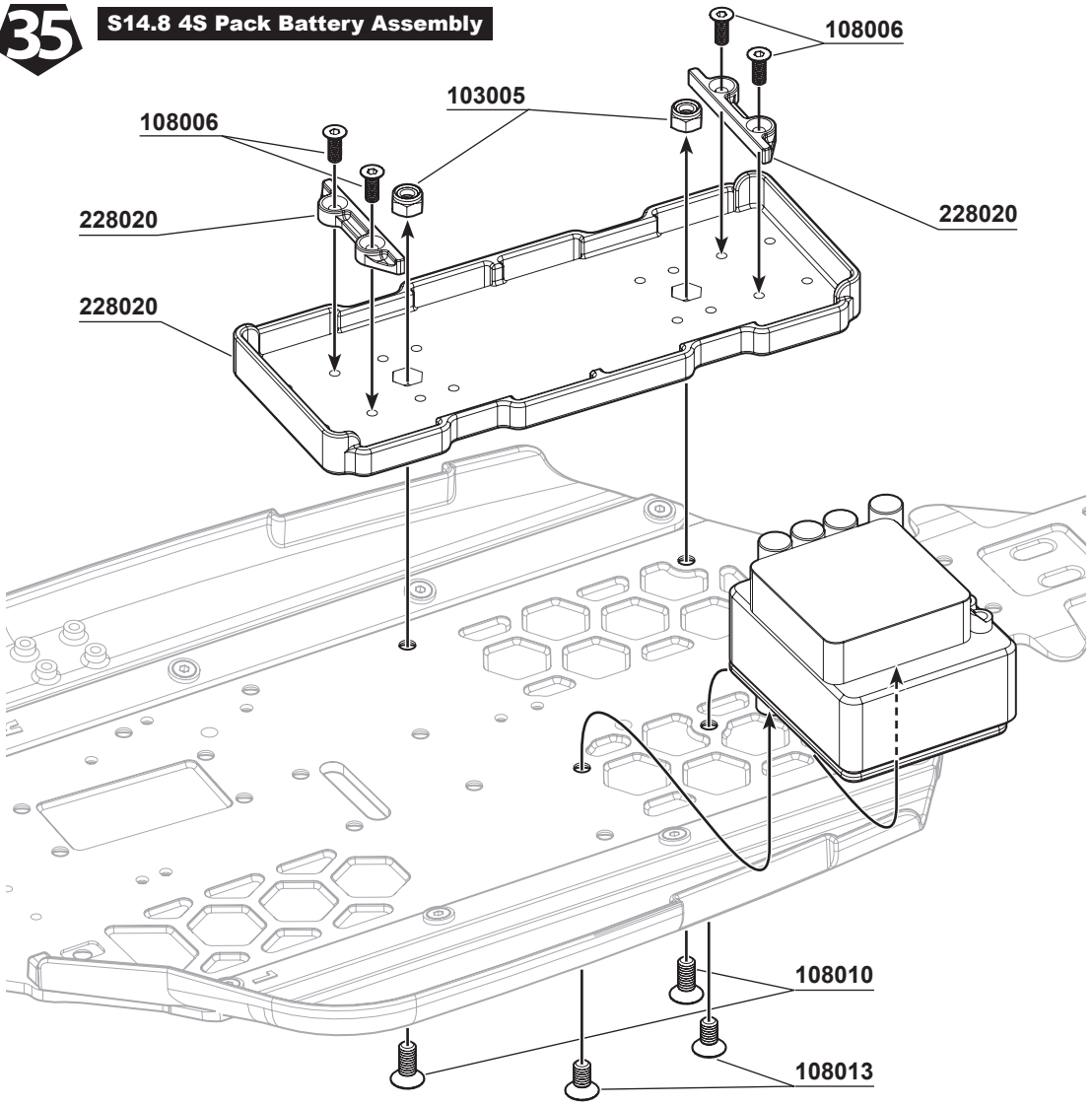

108006
M3x8mm FH/ST HEX Screw ***x4***

108010
M4x10mm FH/ST HEX Screw ***x2***

108013
M4x8mm FH/ST HEX Screw ***x2***

103005
M4 Nut Lock ***x2***

BAG G

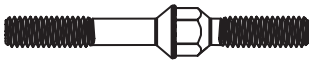

330126A
Steering Turnbuckle ***x2***

36 L R x2

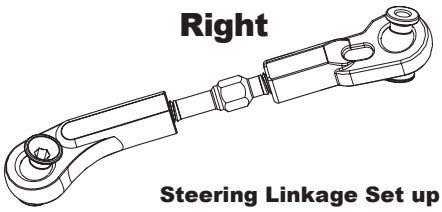

Steering Linkage Set up by Straight Ball Ends

20.6 mm

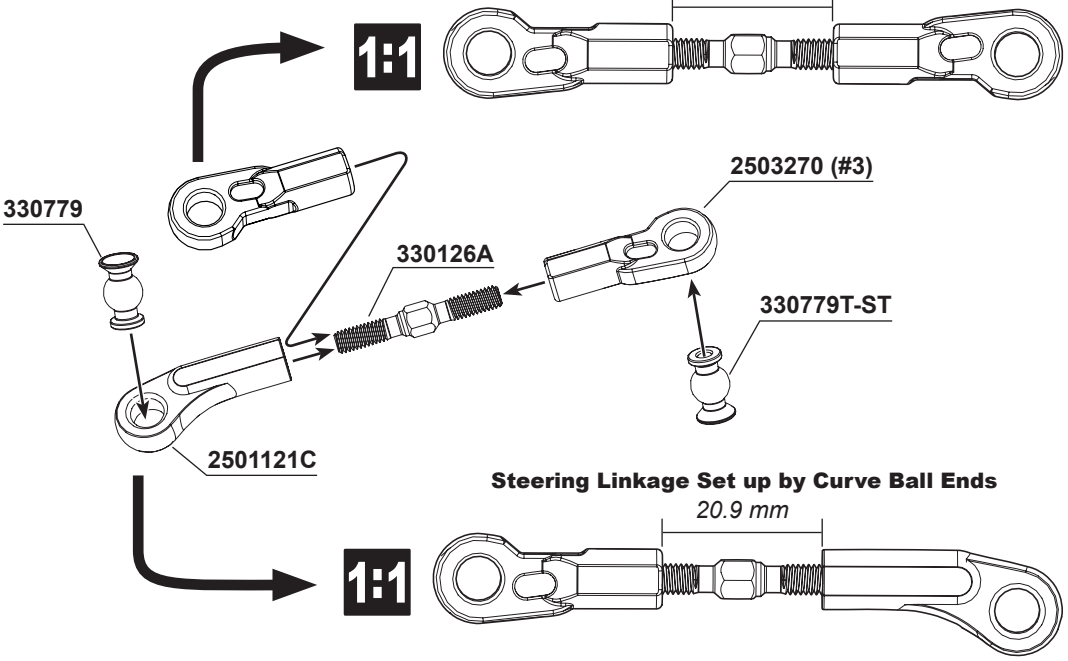

Steering Linkage Set up by Curve Ball Ends

20.9 mm

37 L R x2



106002
M3x10mm Hex Socket OH/TP Screw ***x2***



108021
M3x18mm FH/ST HEX Screw ***x2***



103001
M3mm Nut Lock ***x2***

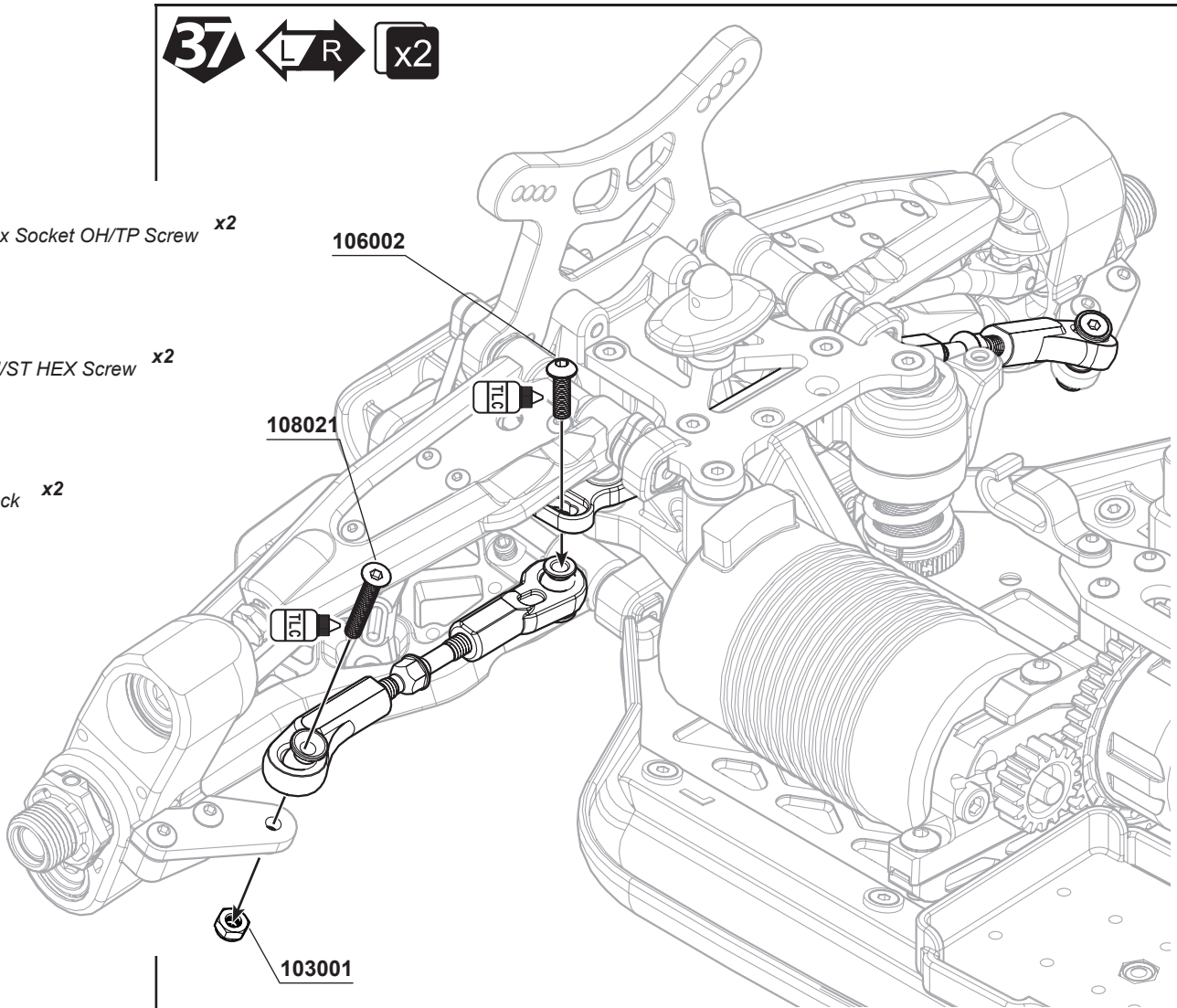

BAG F

104009
M3x16mm Set Screw ***x1***

106008
M3x12mm Hex Socket OH/TP Screw ***x4***

101012
M3x6xT0.6mm ***x4***

105012
M3x10mm Cap Screw ***x1***

106002
M3x10mm Hex Socket OH/TP Screw ***x1***

38

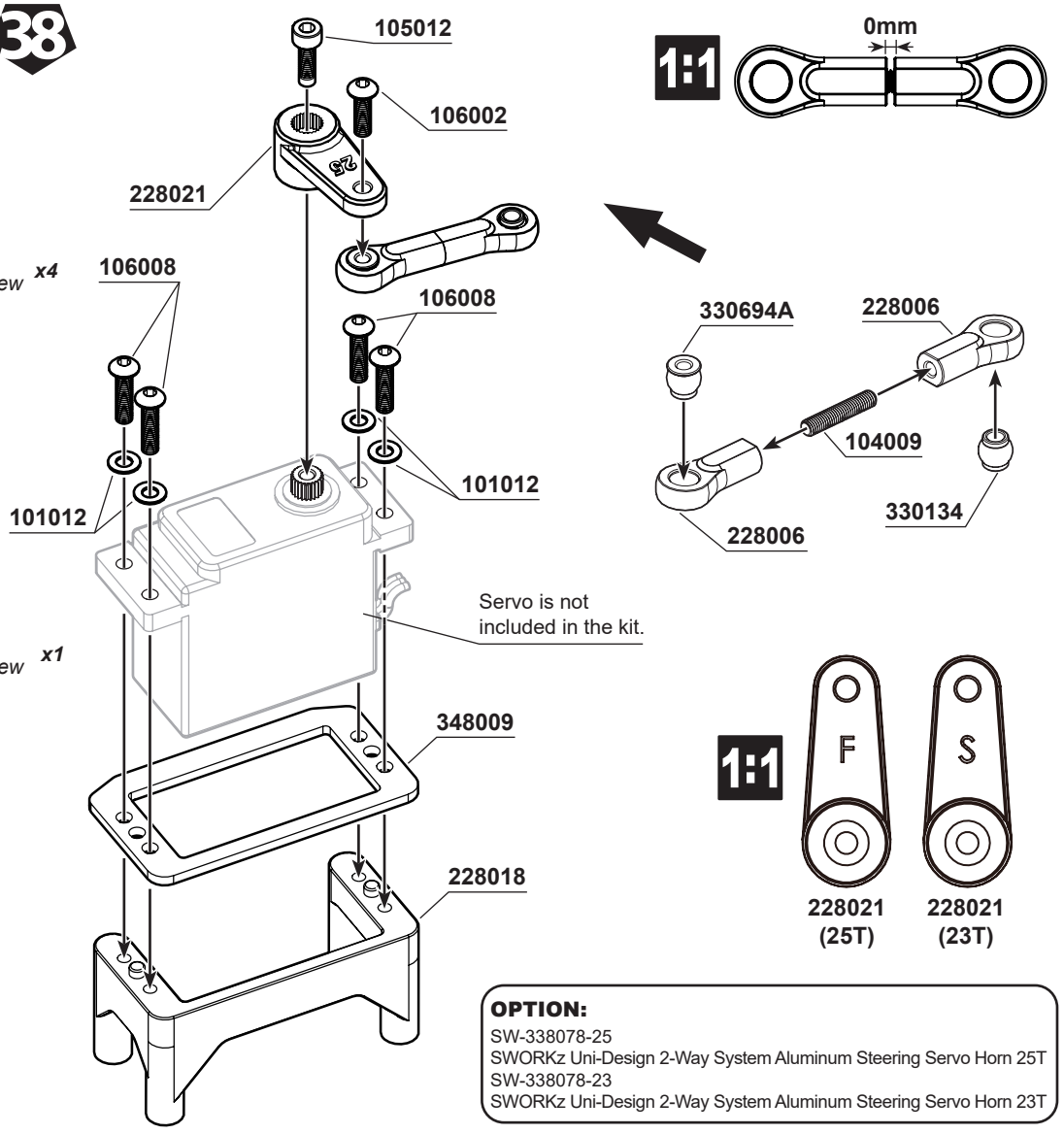

OPTION:
SW-338078-25
SWORKz Uni-Design 2-Way System Aluminum Steering Servo Horn 25T
SW-338078-23
SWORKz Uni-Design 2-Way System Aluminum Steering Servo Horn 23T

101026
S102 Aluminum Washer 3X6X1.5mm ***x1***

106007
M3x12mm Hex Socket OH/TP Screw (HT) ***x1***

108013
M4x8mm FH/ST HEX Screw ***x4***

103001
M3xNut Lock ***x1***

39

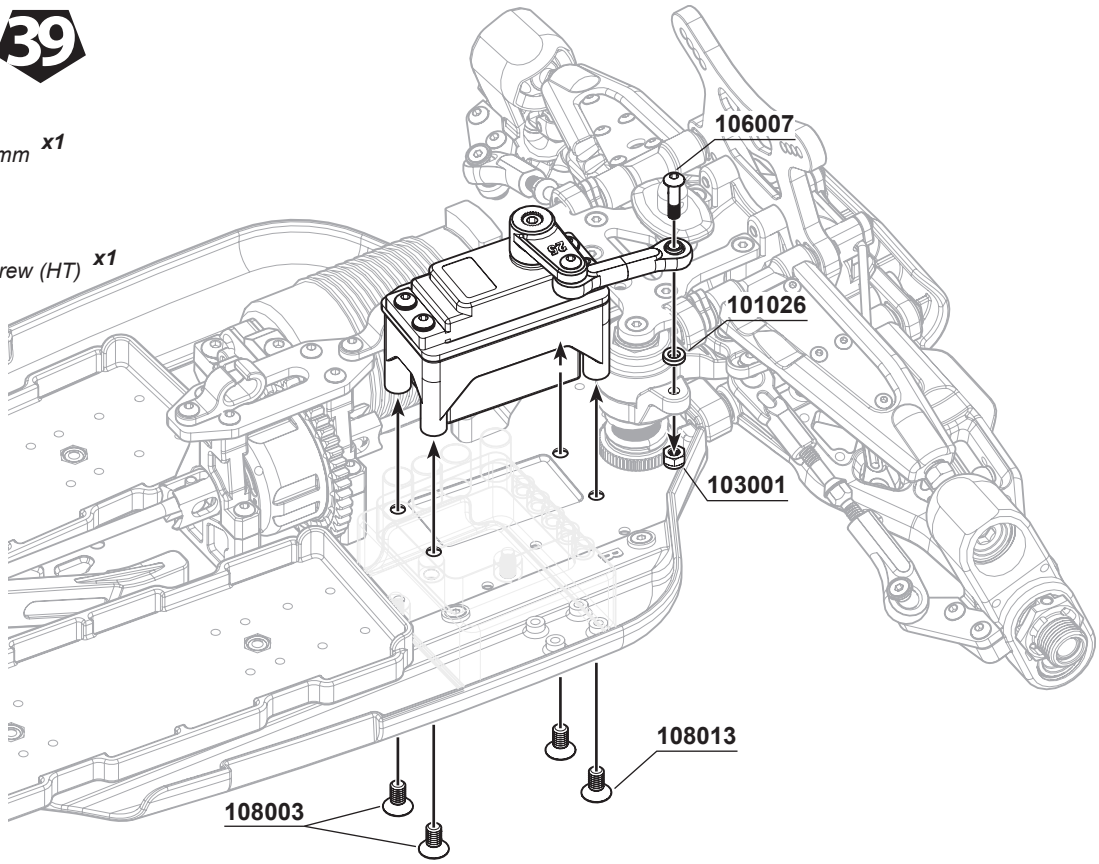

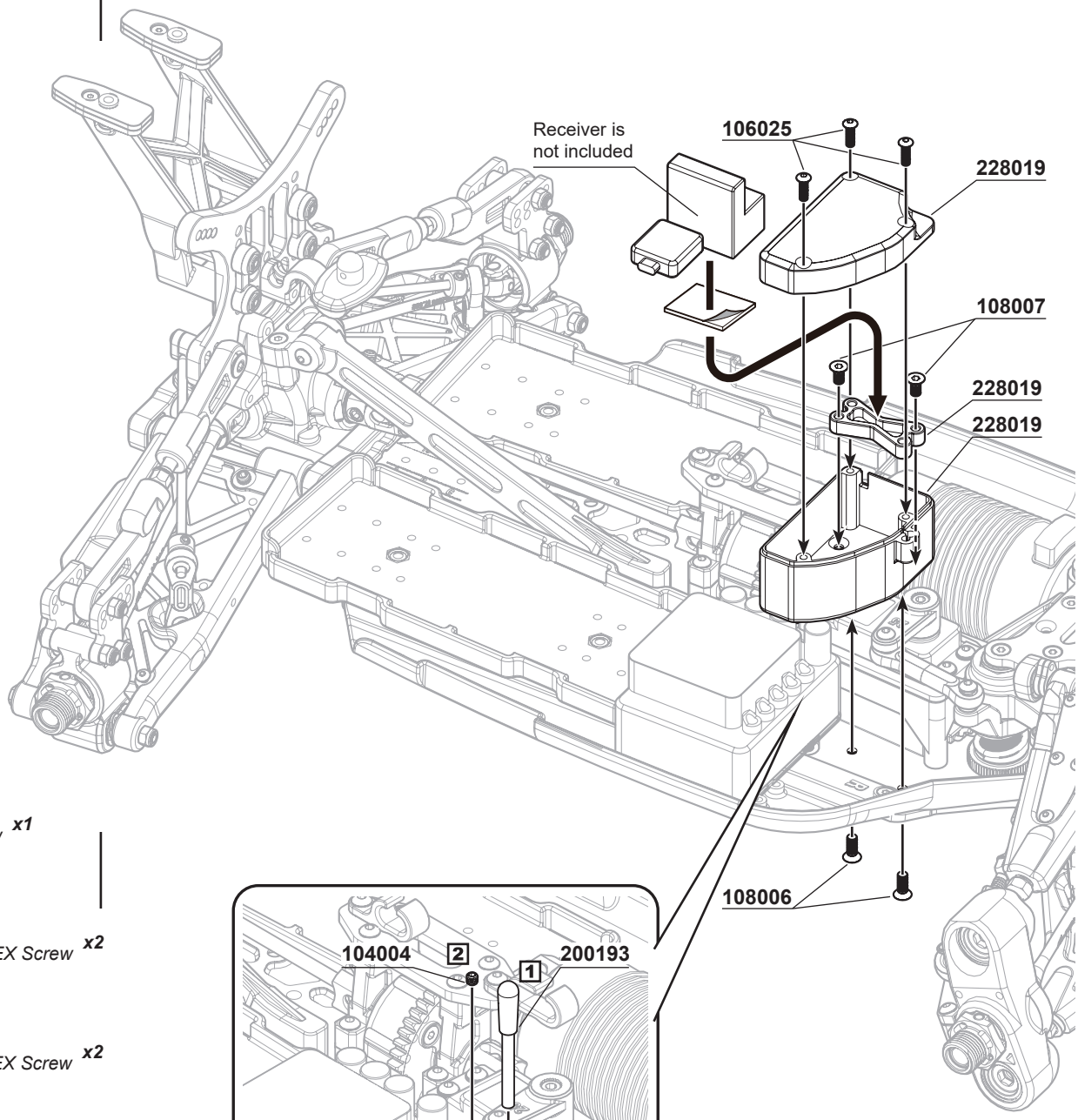

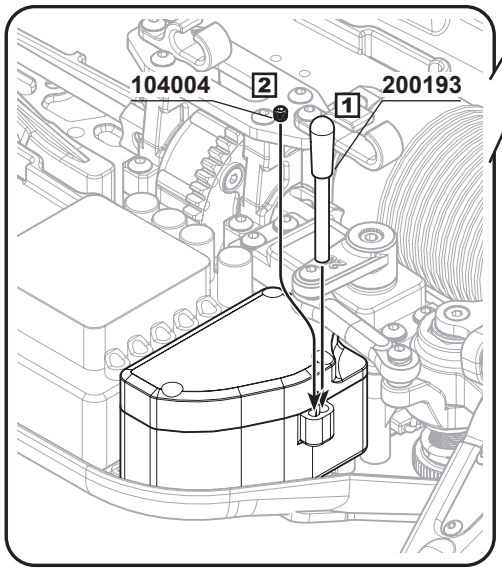

104004
M3x3mm Set Screw ***x1***

108006
M3x8mm FH/ST HEX Screw ***x2***

108007
M3x6mm FH/ST HEX Screw ***x2***

106025
M2.5x8mm Hex Socket OH/TP Screw ***x3***

BAG K

52 F R x2 For Front x2 For Rear

338062A
S35-4 Series BBS System Teflon Coated Durable Shock Shaft (L) x2

338063A
S35-4 Series BBS System Teflon Coated Durable Shock Shaft (S) x2

103004
M2.5mm Nut Lock x4

228016-Seal
Shock Seal Washer 3.5X7X1.0mm x4

228016-Seal
Shock Seal Washer 3.6X7X2.5mm x8

101011
M2.6x6xT0.6mm x4

400006
Shock Seal O-Ring x8

400020
Shock Seal O-Ring x4

400019
Shock Spring Adjust Nut O-Ring x4

108029
M2.0x4.6mm FH/ST HEX Screw (1.5mm HexHead) x4

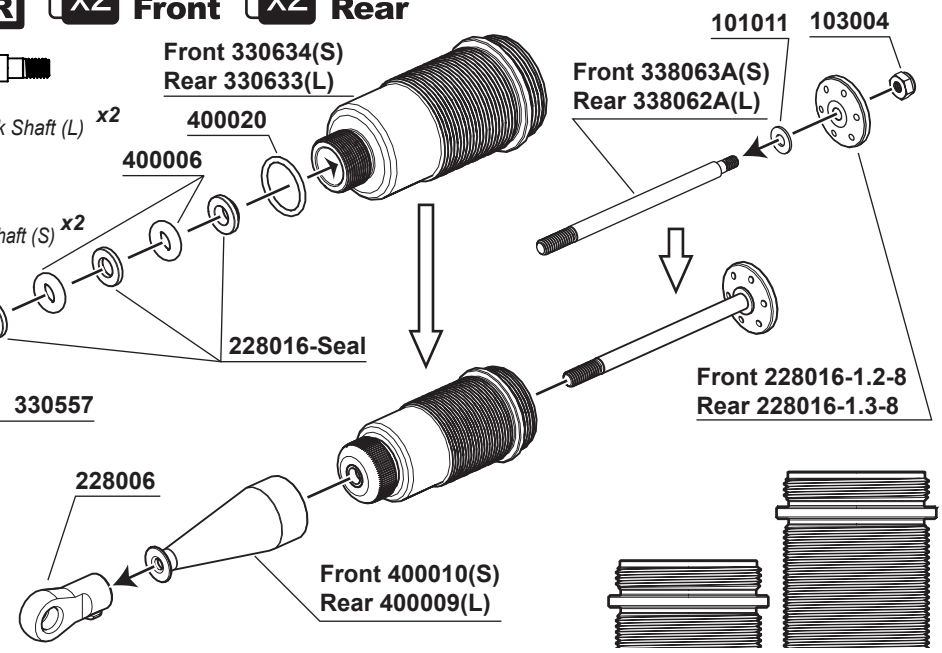

Standard bladder shock cap assembly note

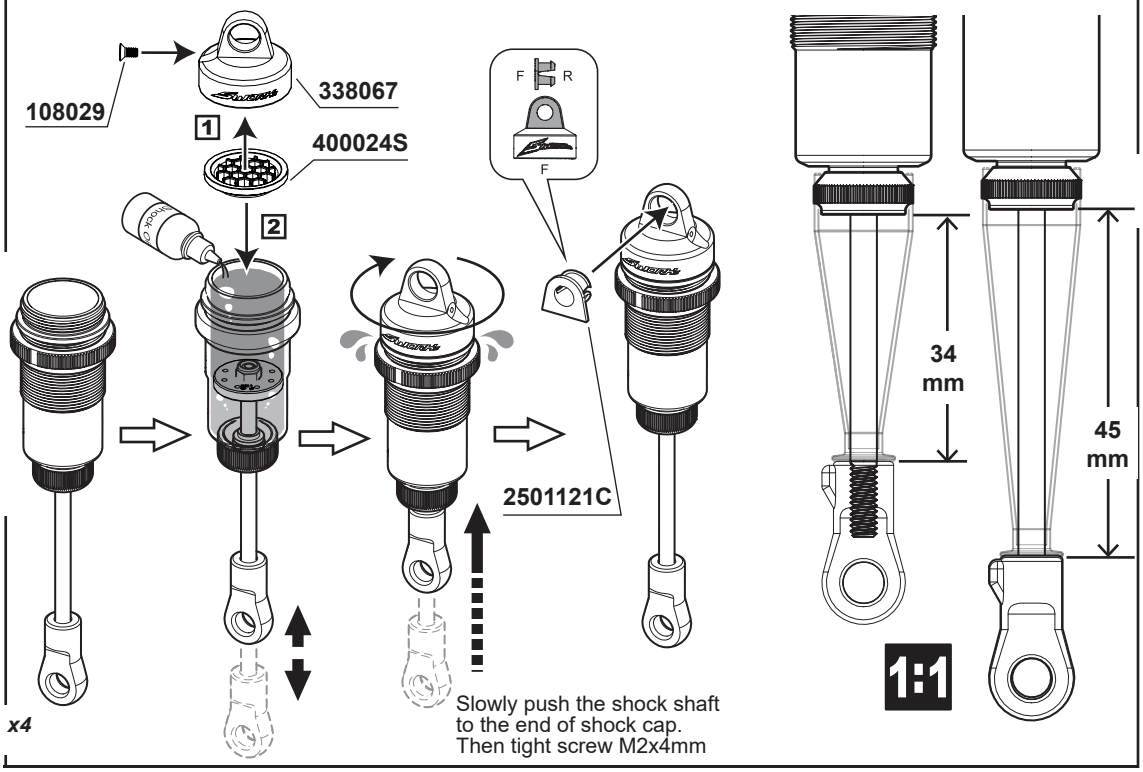

54 F R x2 For Front x2 For Rear

115191
S35 Series Competition Black Line Rear Shock Spring (RM3-Dot)(80X1.6X10.0) x2

115182
S35-4 Black Competition Front Shock Spring (US3-Dot)(62X1.6X7.75) x2

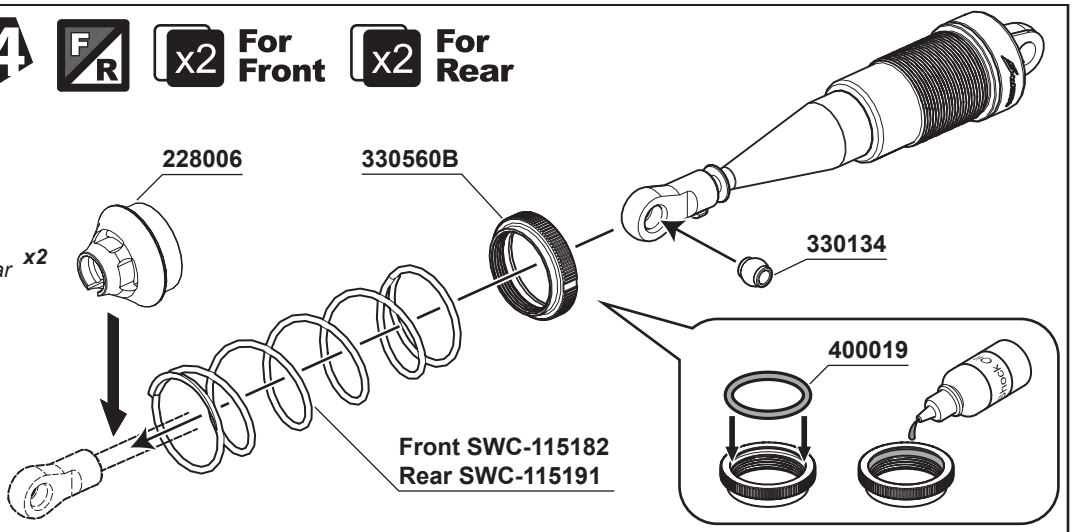

BAG J

105005
M3x12mm Cap Screw x4

55 Safty Shock Stud Screws Assembly

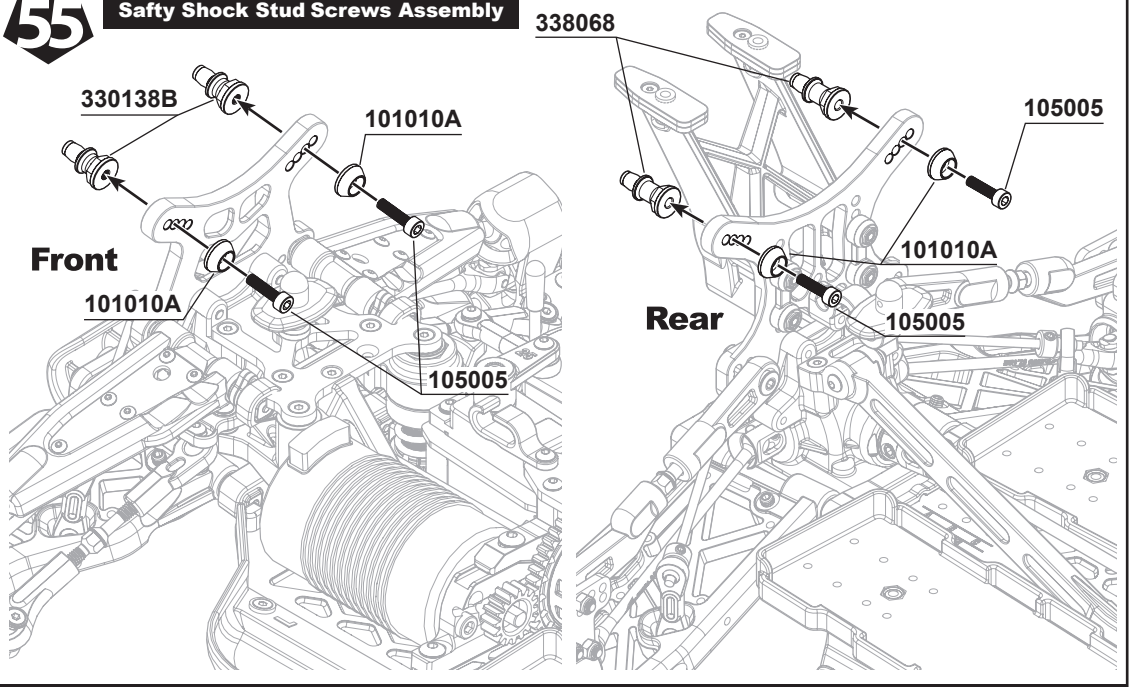

56

105021
M3x6mm Conical Head Screw x4

330243
SWORKz 3x16mm Shock Hex Screw Clockwise x2

330243
SWORKz 3x16mm Shock Hex Screw Anti-Clockwise x2

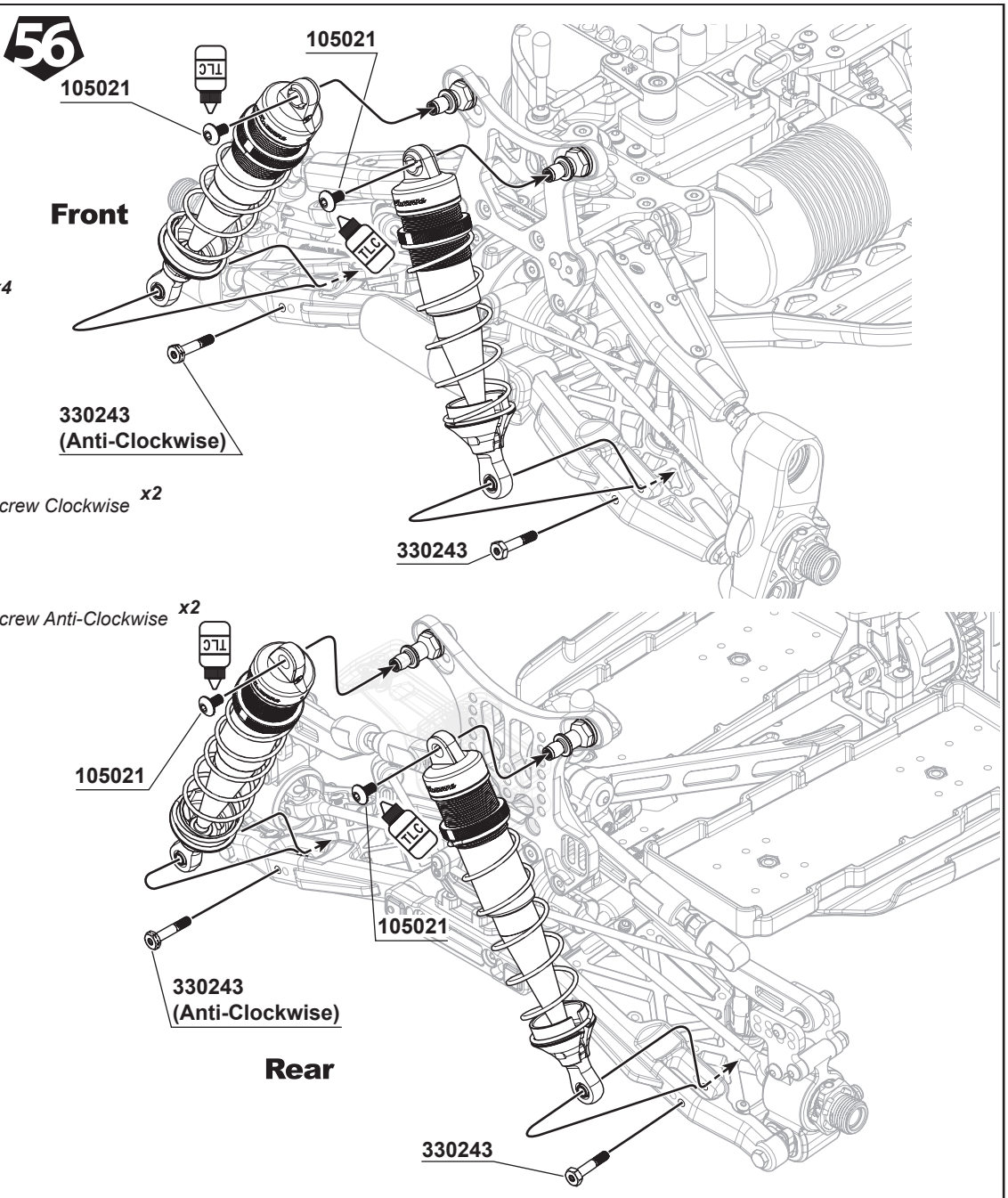

BAG J

105006A
M3x28mm Cap Screw x2

105013A
M3x25mm Cap Screw x2

46 Traditional Shock Stud Screws Assembly

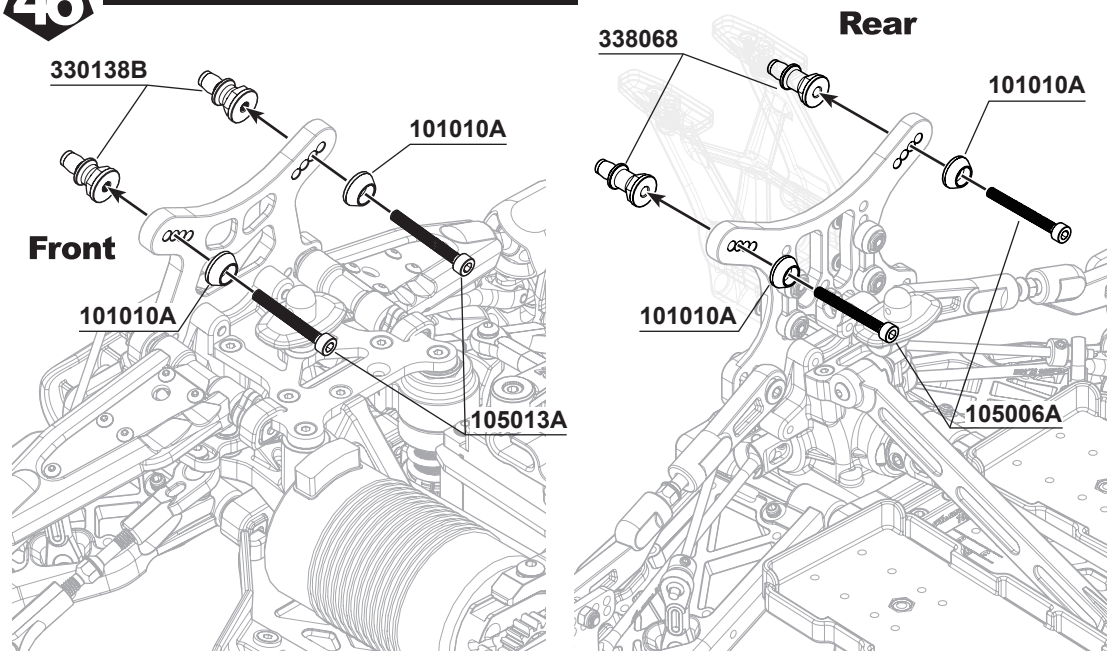

103003A
Flange M3 Nut Lock x4

106003
M3x16mm Hex Socket OH/TP Screw x4

330243
SWORKz 3x16mm Shock Hex Screw Clockwise x2

330243
SWORKz 3x16mm Shock Hex Screw Anti-Clockwise x2

47

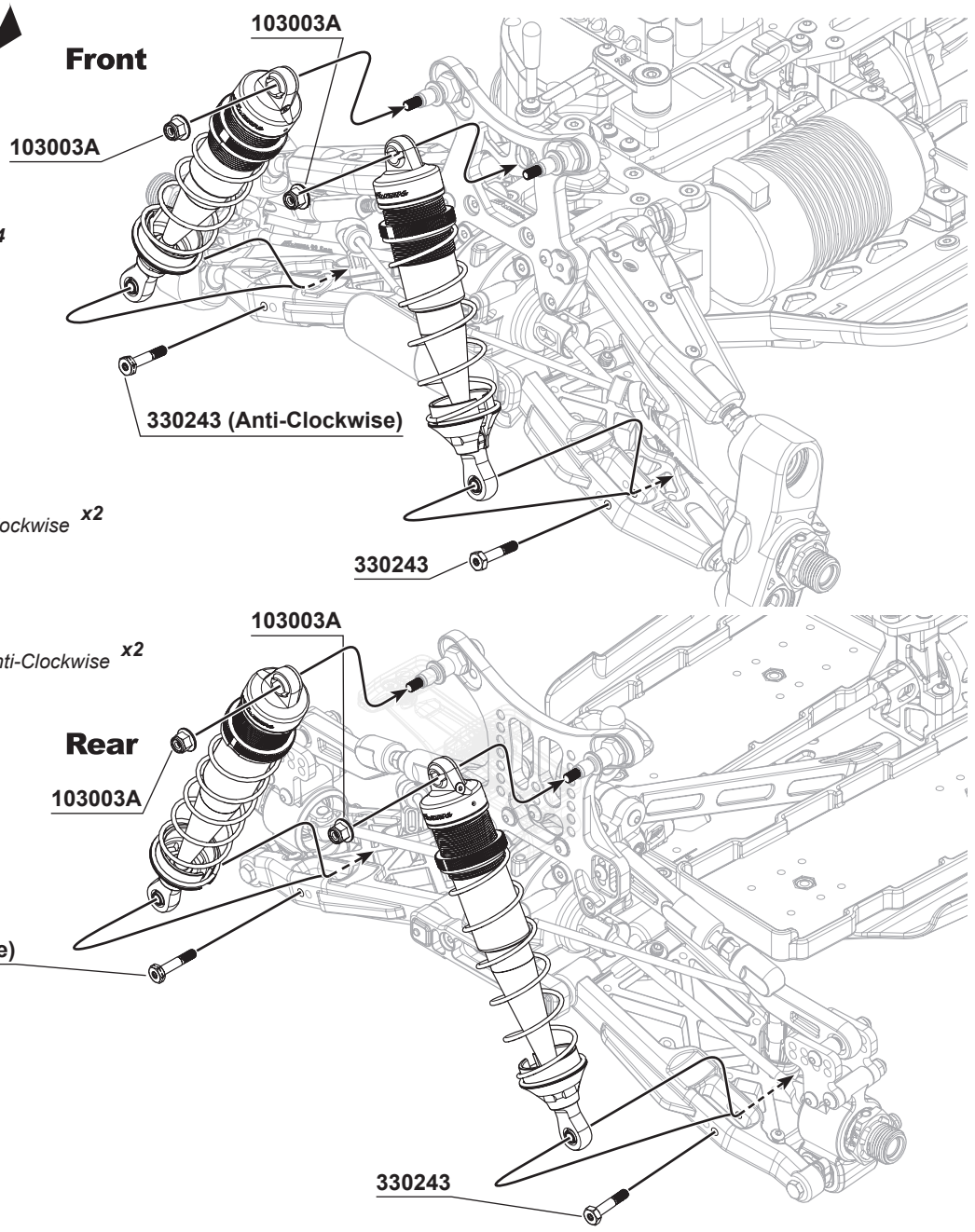

BAG N

105005
M3x12mm Cap Screw ***x2***

106025
M2.5x8mm Hex Socket OH/TP Screw ***x5***

330122A
Wheel Nut ***x4***

59

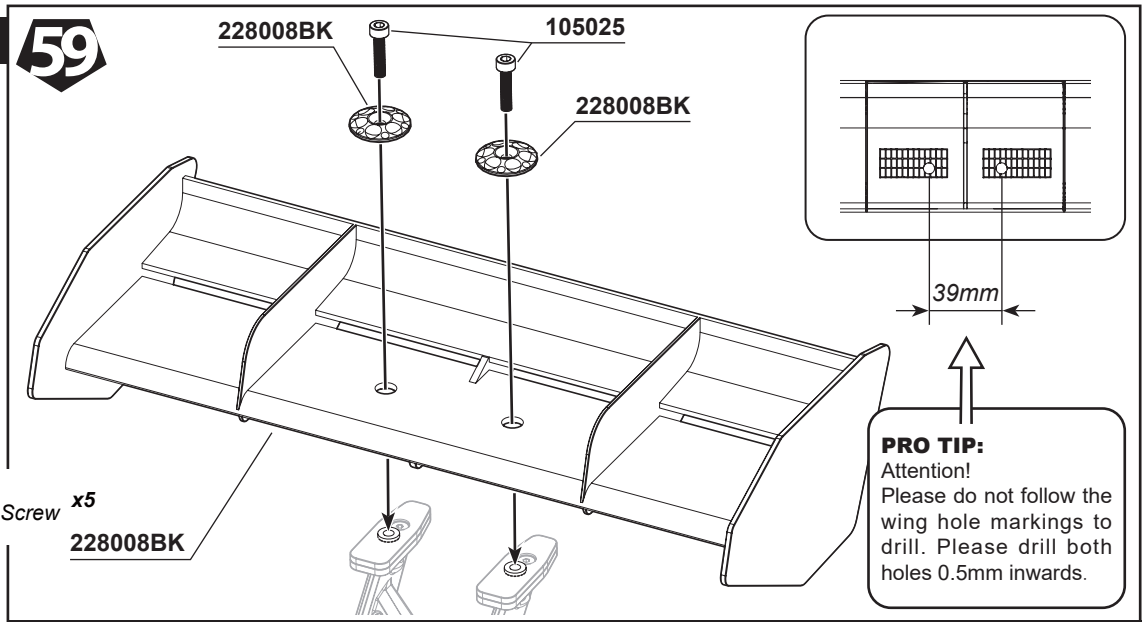

PRO TIP:
Attention!
Please do not follow the wing hole markings to drill. Please drill both holes 0.5mm inwards.

60 L R

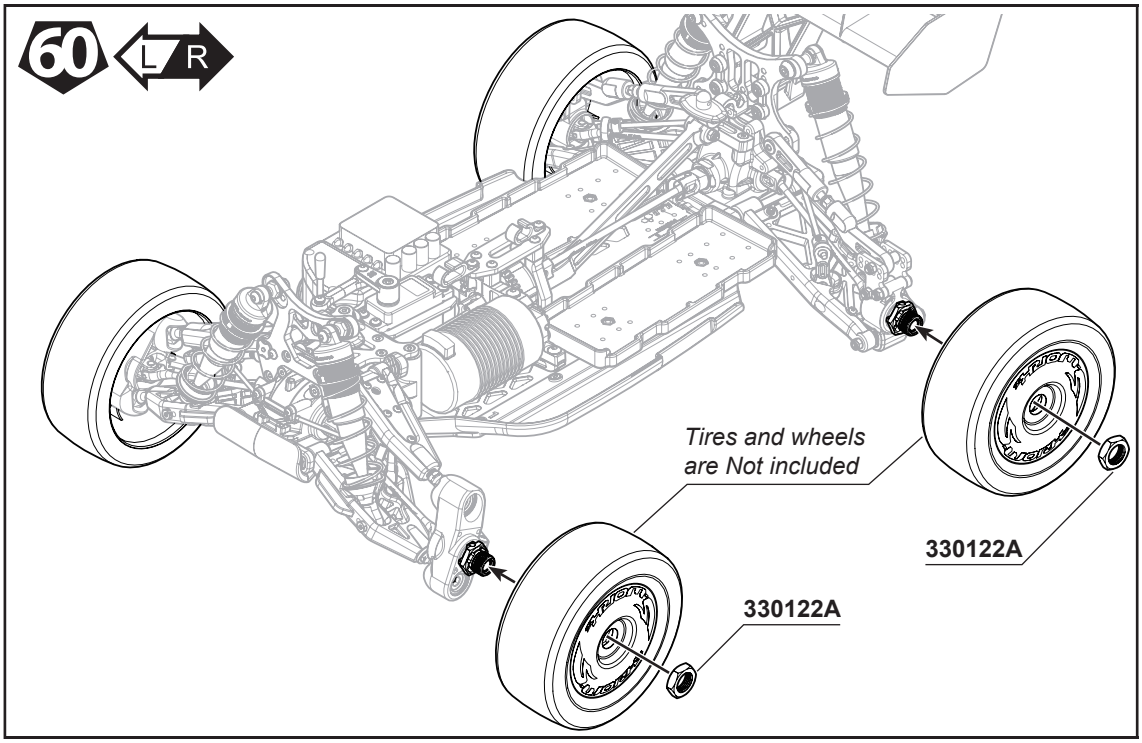

BAG N

61 L R x2

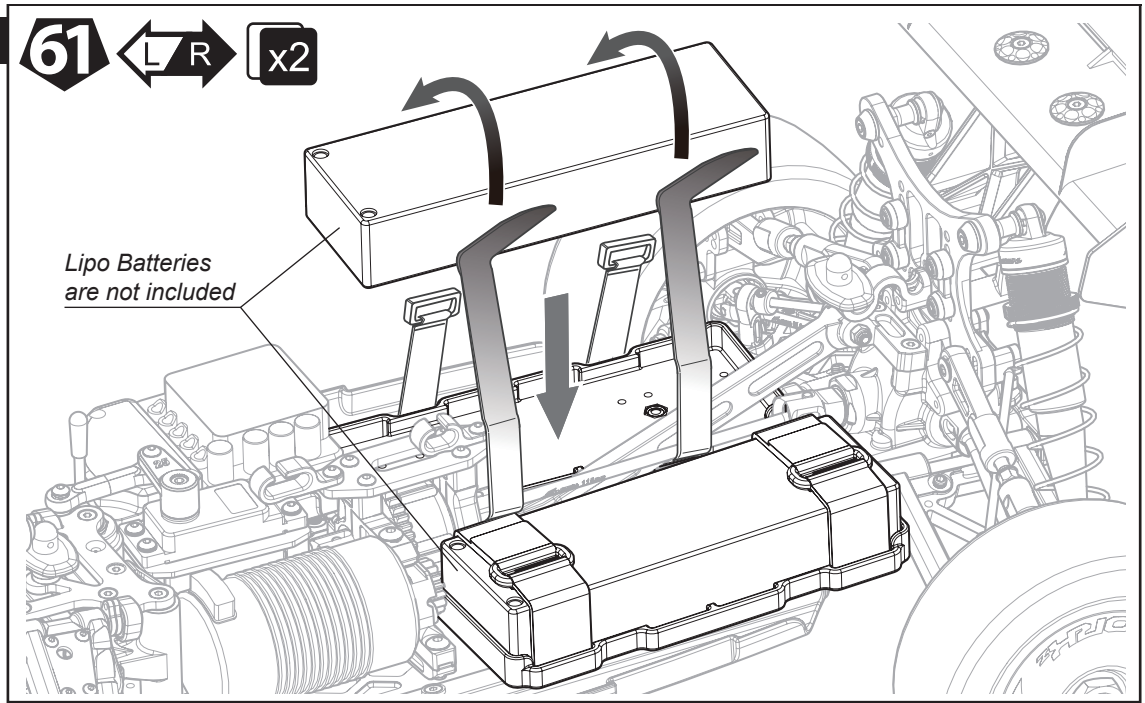

50

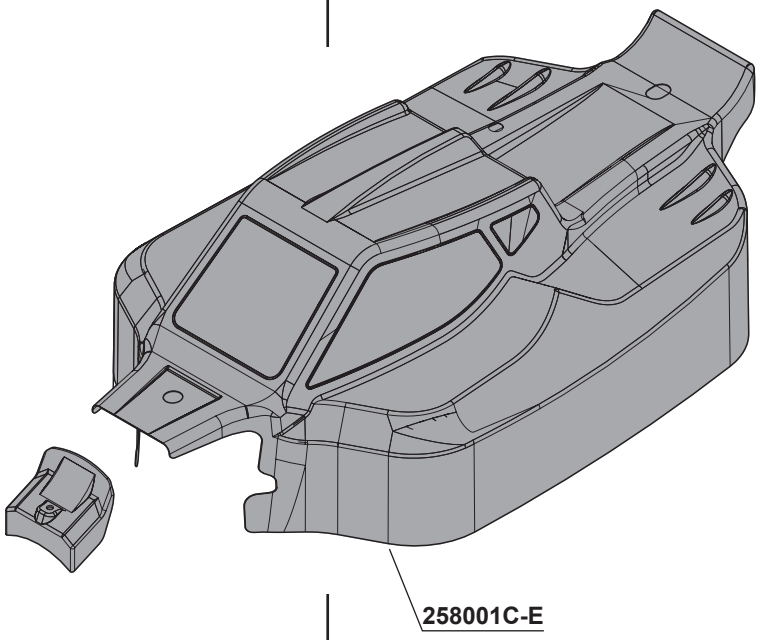

Use water/washing solution to clean body.

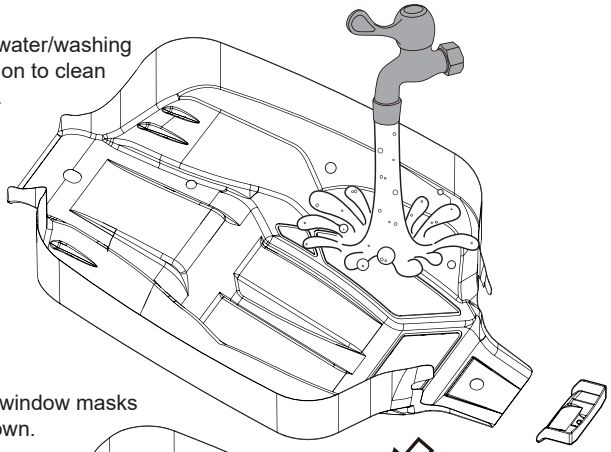

Apply window masks as shown.

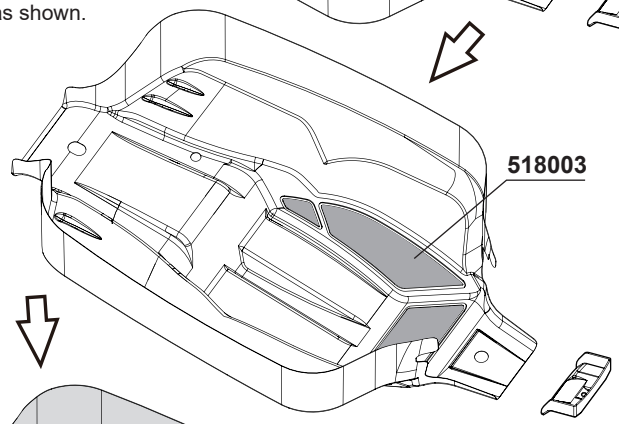

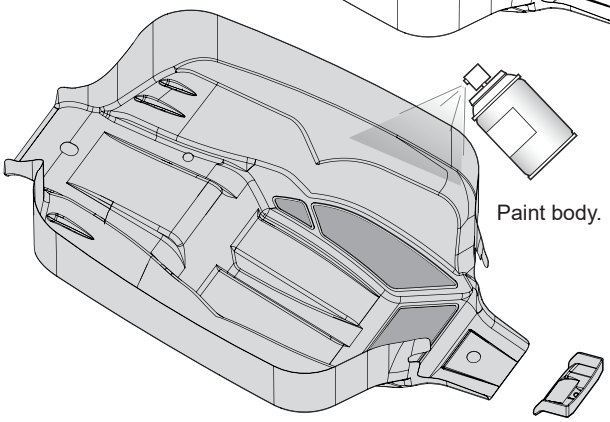

Paint body.

51



106010
Button Head Screw M3x6mm ***x1***

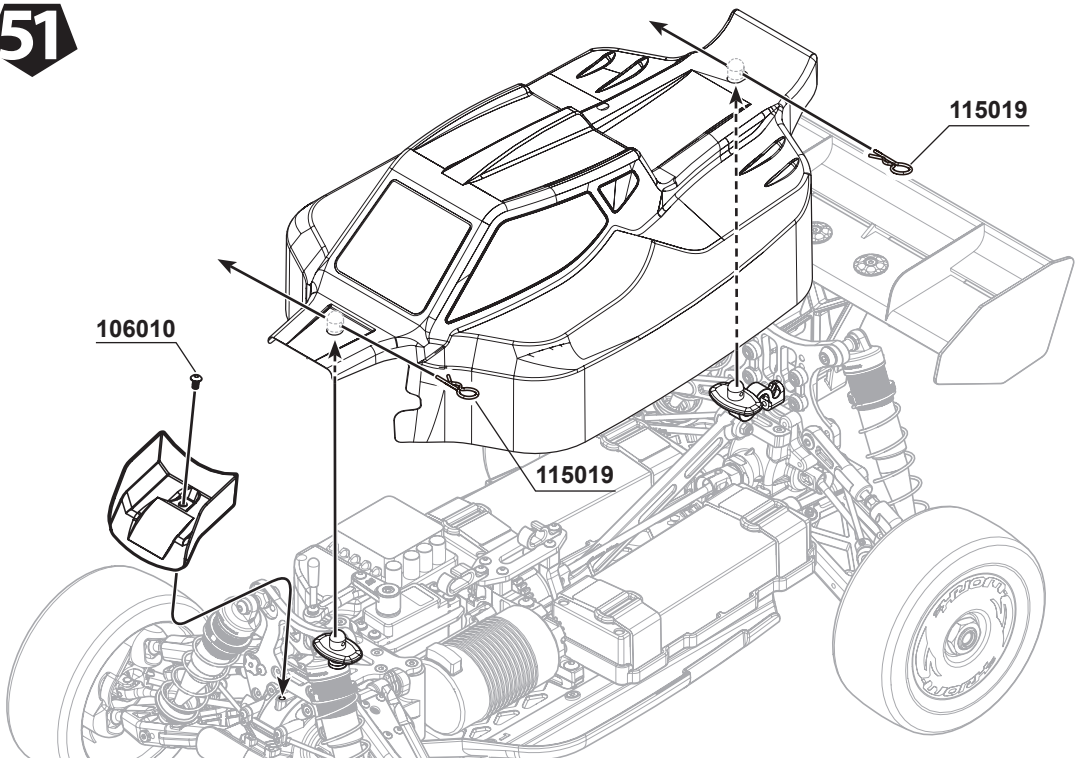

S35-4e EVO — SWORKz SET-UP SHEET

1/8 Off Road Brushless Power Pro Buggy

www.sworkz.com

Race time / Lap: _____

Best lap: _____

Name: SWORKz S35-4e EVO
Date: 2023
Track: Basic Setup

Diff. Oil

Front:	#10000
Center:	#10000
Rear:	#5000

Track Conditions

Size:	☑ Open	☐ Med.	☐ Tight
Traction:	☑ High	☐ Med.	☐ Low
Surface:	☑ Smooth	☐ Med.	☐ Bumpy

Tire

Front		Rear	
Type:	Option	Type:	Option
Foam:	Option	Foam:	Option

Electric System

ESC Type: Option

Motor Type: Option

Motor Gear/Spur Gear: 15/46T

Battery Type — A: Standard Pack: Option (7.4V 2S x 2)

B: Shorty Pack: Option (14.8 4S x 1)

Front Suspension

☑1 ☐2 ☐3 ☐4

338112

F 2 mm

R 2 mm

☐1 ☑2

Wheel Hub Note: Kit 5.5mm

Rebound stop _____ mm

Front Toe-In

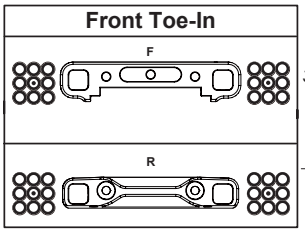

330634

mm

☑ Bladder ☐ Emulsion

Cap: ☑ Soft material ☐ Medium material ☐ Option _____

Spacer: _____ mm

Oil: Kit #600

Pistons: Kit 1.2*8H

Spring: Kit US4

Front Roll Center

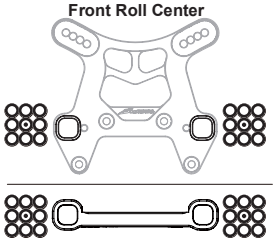

Track width _____ mm

Camber angle Upper 0 mm

Lower 2 mm

Toe angle _____ °

Sway bar ☐Use 2.3 mm ☐None

Camber Angle

L: 1 °

R: 1 °

1 mm

Front Ride Height

Chassis

23 mm

Ground

Steering Ackerman

☐1 ☑2 ☐3 ☐4

Notes: _____

Rear Suspension

Rear Toe-In

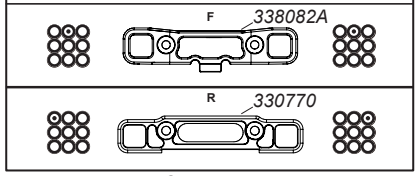

☐1 ☐3 ☑2 ☐4

338113

☐1 ☐2 ☑3 ☐4 ☐5 ☐6 ☐7 ☐8

Camber angle

Wheel Hub Note: Kit 5.5mm

☐1 ☑2

Rebound stop _____ mm

Body: Kit

Wing: Kit

Wing Position

H5☐
H4☑
H3☐H5
H2☑H4
H1☐H3
☐H2
☐H1

Wing Angle: _____ °

Upper arm position

6☐	☐1
7☐	☐2
8☐	☐3
9☐	☐4
10☐	☐5

☑ Bladder ☐ Emulsion

Cap: ☑ Soft material ☐ Medium material ☐ Option _____

Spacer: _____ mm

Oil: Kit #600

Pistons: Kit 1.3*8H

Spring: Kit RM3

330633

mm

Sway bar ☑Use 2.8 mm ☐None

Camber angle 1.5 °

0 mm

Rear Ride Height

Chassis

25 mm

Ground

Wheelbase adjustment

F 3 mm

R 2 mm

Front

A☐Brass(15g) x ___

B☐Brass(15g) x ___

BALANCE WEIGHT 15-45g

A B C POSITION

H.S.D

A☐ Brass(15g) x ___

B☐ Brass(15g) x ___

C☐ Brass(15g) x ___

Notes: _____

Option Parts List

Front Upper Arm

☐Hard ☑Soft

Carbon Cover 1.0 mm

Front Lower Arm

☐Ultra Hard ☑Hard ☐Medium ☐Soft

Carbon Cover 0 mm

Rear Lower Arm (228015)

☐Ultra Hard ☑Hard ☐Medium ☐Soft

☐Use ☑None

Carbon Cover 0 mm

S35-4e EVO
1/8 Off Road Brushless Power Pro Buggy

SWORKZ www.sworkz.com

SET-UP SHEET

Race time / Lap: _____

Best lap: _____

Name: _____
Date: _____
Track: _____

Diff. Oil
Front: _____
Center: _____
Rear: _____

Track Conditions
Size: □ Open □ Med. □ Tight
Traction: □ High □ Med. □ Low
Surface: □ Smooth □ Med. □ Bumpy

Tire
Front Type: _____ Foam: _____
Rear Type: _____ Foam: _____

Electric System
ESC Type: _____
Motor Type: _____
Motor Gear/Spur Gear: _____
Battery Type
A: Standard Pack _____
B: Shorty Pack _____

Front Suspension

□1 □2 □3 □4

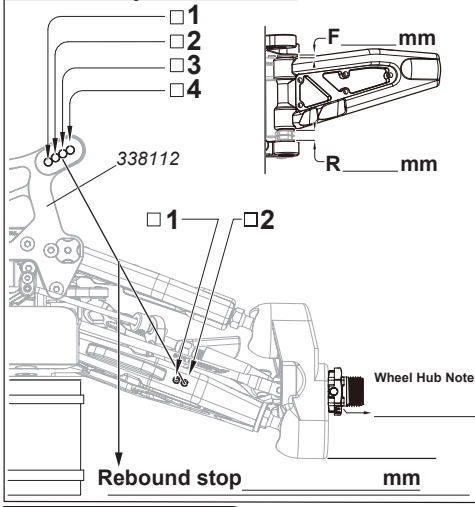

Front Toe-In

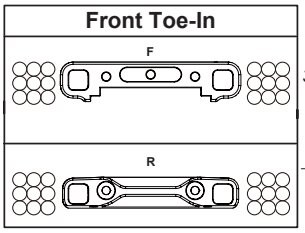

Front Roll Center

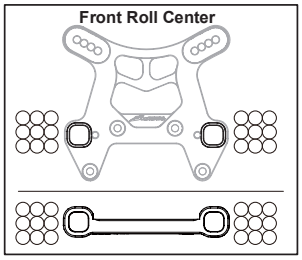

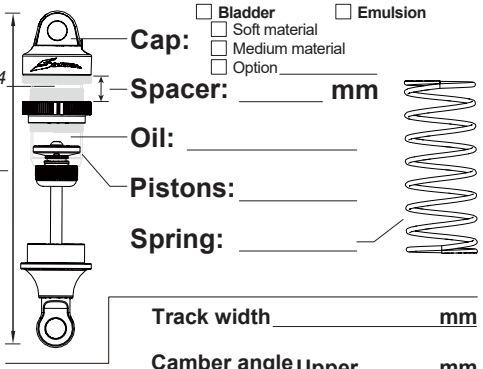

□ Bladder □ Emulsion
□ Soft material
□ Medium material
□ Option ____

Cap: _____
Spacer: _____ mm
Oil: _____
Pistons: _____
Spring: _____

Track width _____ mm

Camber angle Upper _____ mm
Lower _____ mm

Toe angle _____ °

Sway bar □Use _____ mm
□None

Camber Angle
L: _____ °
R: _____ °

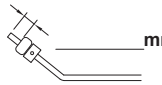

_____ mm

Notes: _____

Front Ride Height
Chassis
_____ mm
Ground

Steering Ackerman
□1 □2 □3 □4

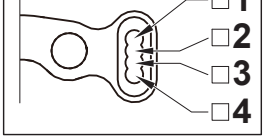

Rear Suspension

Rear Toe-In

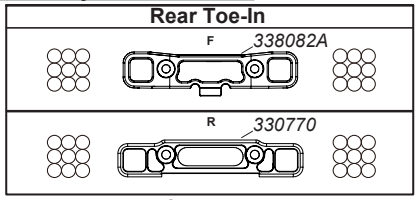

□1 □2 □3 □4

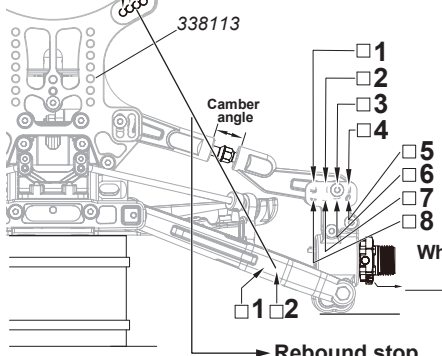

Body: _____
Wing: _____

Wing Position
H5□
H4□
H3□H5
H2□H4
H1□H3
□H2
□H1
Wing Angle: _____ °

Upper arm position

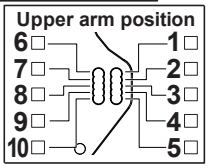

Rear Ride Height
Chassis
_____ mm
Ground

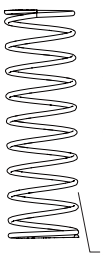

□ Bladder □ Emulsion
□ Soft material
□ Medium material
□ Option ____

Cap: _____
Spacer: _____ mm
Oil: _____
Pistons: _____
Spring: _____

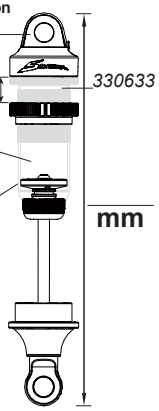

Sway bar □Use _____ mm
□None

Camber angle _____ °

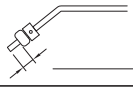

_____ mm

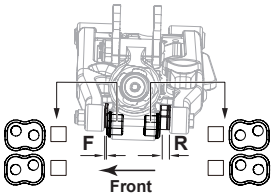

Wheelbase adjustment
F ____ mm
R ____ mm

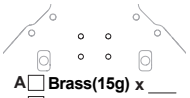

A□ Brass(15g) x ___
B□ Brass(15g) x ___

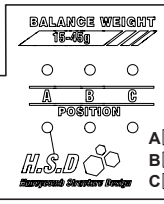

A□ Brass(15g) x ___
B□ Brass(15g) x ___
C□ Brass(15g) x ___

Notes: _____

Option Parts List

Front Upper Arm
□Hard □Soft

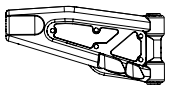

Carbon Cover
_____ mm

Front Lower Arm
□Ultra Hard □Hard □Medium □Soft

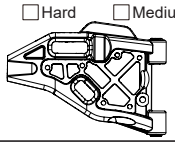

Carbon Cover
_____ mm

Rear Lower Arm (228015)
□Ultra Hard □Hard □Medium □Soft

□Use
□None

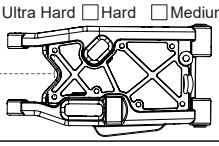

Carbon Cover
_____ mm

S35-4e EVO

1/8 Off Road Brushless Power Pro Buggy

SWORKZ www.sworkz.com

SET-UP SHEET

Race time / Lap: _____

Best lap: _____

Name: _____
Date: _____
Track: _____

Diff. Oil

Front: _____
Center: _____
Rear: _____

Track Conditions

Size: ☐ Open ☐ Med. ☐ Tight
Traction: ☐ High ☐ Med. ☐ Low
Surface: ☐ Smooth ☐ Med. ☐ Bumpy

Tire

Front Type: _____ Foam: _____
Rear Type: _____ Foam: _____

Electric System

ESC Type: _____
Motor Type: _____
Motor Gear/Spur Gear: _____
Battery Type A: Standard Pack _____
B: Shorty Pack _____

Front Suspension

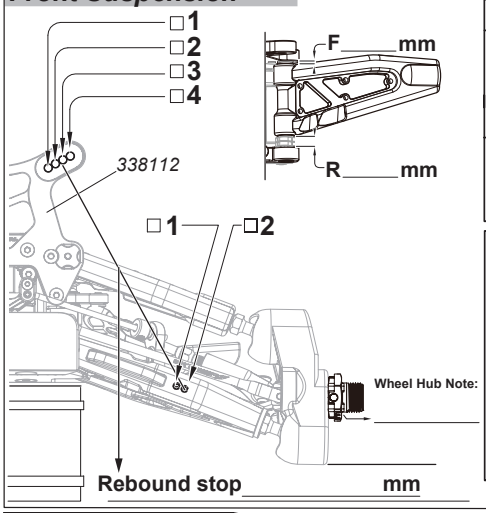

Front Toe-In

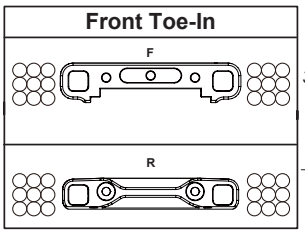

Front Roll Center

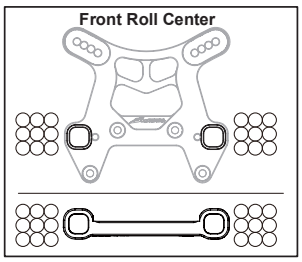

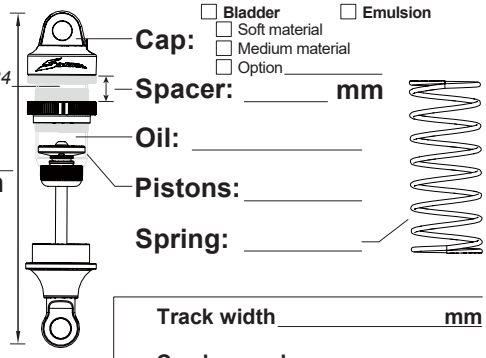

☐ Bladder ☐ Emulsion
Cap: ☐ Soft material ☐ Medium material ☐ Option _____
Spacer: _____ mm
Oil: _____
Pistons: _____
Spring: _____

Track width _____ mm
Camber angle Upper _____ mm
Lower _____ mm
Toe angle _____ °
Sway bar ☐Use _____ mm
☐None

Camber Angle
L: _____ °
R: _____ °

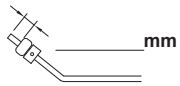

Front Ride Height
Chassis
_____ mm
Ground

Notes: _____

Rear Suspension

Rear Toe-In

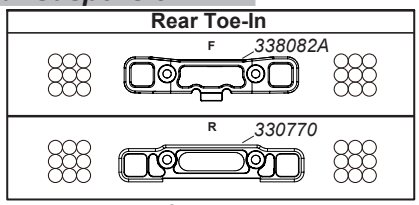

Steening Ackerman

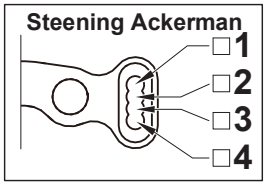

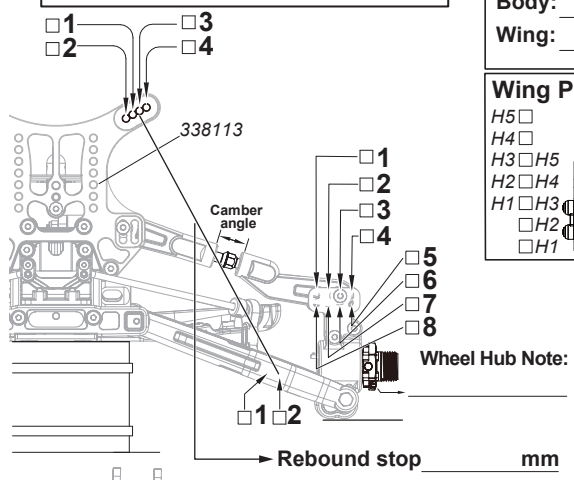

Body: _____
Wing: _____

Wing Position

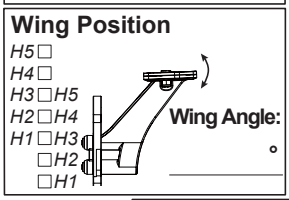

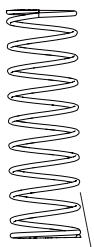

☐ Bladder ☐ Emulsion
Cap: ☐ Soft material ☐ Medium material ☐ Option _____
Spacer: _____ mm
Oil: _____
Pistons: _____
Spring: _____

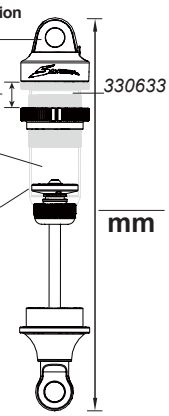

Sway bar ☐Use _____ mm
☐None
Camber angle _____ °

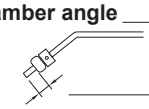

Upper arm position

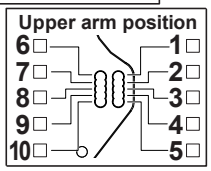

Rear Ride Height
Chassis
_____ mm
Ground

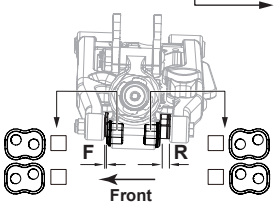

Wheelbase adjustment
F ____ mm
R ____ mm

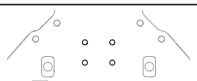

A☐ Brass(15g) x ___
B☐ Brass(15g) x ___

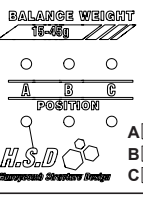

A☐ Brass(15g) x ___
B☐ Brass(15g) x ___
C☐ Brass(15g) x ___

Notes: _____

Option Parts List

Front Upper Arm
☐Hard ☐Soft

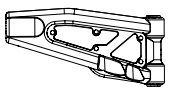

Carbon Cover _____ mm

Front Lower Arm
☐Ultra Hard ☐Hard ☐Medium ☐Soft

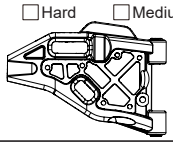

Carbon Cover _____ mm

Rear Lower Arm (228015)
☐Ultra Hard ☐Hard ☐Medium ☐Soft
☐Use
☐None

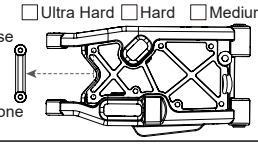

Carbon Cover _____ mm

Parts No. List

Part No.	Part Name	Q`ty in Use	Item No.
210091	S35-3W Plastic Front/Rear Big Bore Diff Case	2	SW-210091
210079A	S35-4 Plastic Center Big Bore HET Diff Case	1	SW-210079A
2501097B	S35 Series Front Bumper	1	SW-2501097B
2501121C	S35/S350 Series Ball End Set with Shock Plastic Parts	2	SW-2501121C
2501529	S350 BX1/BR1Rear Chassis Brace	1	SW-2501529
2503260	S353 Series Plastic Inserts Set	1	SW-2503260
2503261A	S35-3/GT Series Gear Box Set (Fit 5x13x4mm Ball Bearing)	2	SW-2503261A
2503264A	S35-3 Series Front Steering Knuckle (Type 2.0) L	1	SW-2503264A
2503270-1	S35-3 Series Front Upper Arms	2	SW-2503270-1
2503270-2	S35-3 Series Rear Upper Arm Outside Ball Ends	4	SW-2503270-2
2503270-3	S35-3 Series Front Steering Ball Ends	2	SW-2503270-3
228001DG	S35-4 Series Plastic Inserts Set (Durable)(Gray)	2	SW-228001DG
228002-1	S35-4 Series Plastic Rear Wheel Hub (R=L)	2	SW-228002-1
228002-2E	S35-4e EVO Series Plastic Front Chassis Shorty Brace	1	SW-228002-2E
228003A	S35 Series Integrated Wing Mount Set 2.0	1	SW-228003A
228004A	S35-4 Series Plastic Side Guard Set with Stopper	1	SW-228004A
228005H-F	S35-4 Series Front Lower Arm in Soft Material	2	SW-228005H-F
228006	S35 Series Shock End/Body Mount/Ball Ends Set	2	SW-228006
228007-2	S35-4E Buggy Series Plastic Center Diff. Mount	2	SW-228007-2
228008BK	SWORKz 1/8 Off Road Formula 2.0 Race Wing (BK)	1	SW-228008BK
228015H	SWORKz S35-4 Series Arched-Bridge-System Rear Lower Arm Set (Hard)	2	SW-228015H
228017	S35-4/e EVO Series Lay-Down Type Steering Bellcrank Set	1	SW-228017
228018	S35-4e EVO Electric Series Steering Servo Mount & Rear Upper Deak Holder	1	SW-228018
228019	S35-4e EVO Electric Series Receiver Box & Accessories	1	SW-228019
228020	S35-4e EVO Electric Series Battery Case	2	SW-228020
228021	SWORKz 1/8 Steering and Throttle Servo Horn Set	1	SW-228021
228016-1.2-8	SWORKz 1/8 BBS Precision Plastic Shock Piston(1.2X8Holes)	2	SW-228016-1.2-8
228016-1.3-8	SWORKz 1/8 BBS Precision Plastic Shock Piston(1.3X8Holes)	2	SW-228016-1.3-8
228016-Seal	SWORKz 1/8 BBS Precision Plastic Shock Seal Part (2 Sets)	2	SW-228016-Seal
210046	S350 Series LDS Universal Cross Drive Shaft Set 92.5mm (1pc)	4	SW-210046
200193	Antenna Tube	1	SW-200193
258001C-E	S35 Series Falcon ST-4 Clean Body Shell (Pre-Cut for EP Buggy)	1	SW-258001C-E
328001	S35-3W Diff. Bevel Gear 20T	6	SW-328001
328001	S35-3W Diff. Bevel Gear 10T	12	SW-328001
330015	Pin M2.2x9.9mm	6	SW-330015
330117A	S350 Series Knuckle Pivot Ball Washer(GM)	2	SW-330117A
330118A	S350 Series Knuckle Pivot Ball Nut(GM)	4	SW-330118A
330119	Front Upper Arm HingPin	2	SW-330119
330122A	S350 Wheel Nut (HC)	4	SW-330122A
330123A	S350 EVO Rear Upper Sus. Arm Turnbuckles M5x38mm	2	SW-330123A
330124	Pin M3.0x16.8mm	4	SW-330124
330125	Rear Upper Sus. Arm Ball Stud	2	SW-330125
330126A	S350 EVO Steering Turnbuckle M4x40mm	2	SW-330126A
330134	Shock Ball Stud	9	SW-330134
330136	Sway Bar Ball Stud	4	SW-330136
330138B	S350 EVO Aluminum Shock Cap Stud (-1.3mm)	2	SW-330138B
330243	SWORKz 3x16mm Shock Hex Screw Clockwise	2	SW-330243
330244	SWORKz 3x16mm Shock Hex Screw Anti-Clockwise	2	SW-330243
330245	BE1 Motor Gear 15T	1	SW-330245
330399B	S35-3 Series Aluminum Rear Chassis Brace Mount (GM)	1	SW-330399B
330557	S350 New BBS System Shock Seal Cap (GM)	4	SW-330557
330560B	S35 New BBS System Shock Spring Adjust Nut (BK)	4	SW-330560B
330661A	S35-T/S35 Series Competition Center Drive Join (5mm set screw)	2	SW-330661A
330633	S350 BBS System +5.6mm Shock Body L (HD)	2	SWC-330633
330634	S350 BBS System +5mm Shock Body S (HD)	2	SWC-330634
330663A	S350 Series S35 Competition Steel F-Center Drive Shaft (115mm)	1	SW-330663A
330694A	S35 E Series 6mm Steel Ball Stud	1	SW-330694A
330770	S35-3 Series Aluminum Rear Changeable Lower Arm Holder	1	SW-330770
330767A	S35-3 Series Steel F-Center Dive Shaft (88mm)	1	SW-330767
330779	S35-4/e EVO Series Steering Linkage Steel Ball Stud 7mm(L6)	2	SW-330779
330779T-ST	S35-4/e EVO Steering Linkage Steel Ball Stud 7mm (L6 Thread Type)	2	SW-330779T-ST
330782	S35-3 Series Rear Hub Carriers Hinge Pin	2	SW-330782
338011	S35 series Pinion Gear Stopper (5x7x5.1mm)	2	SW-338011
338023	S35-3W Pinion Gear 13T	2	SW-338023
338024	S35-3W Crown Gear 43T	2	SW-338024
338025	S35-3W Bevel Gear Shaft	6	SW-338025
338027	S35-3W Front/Rear Diff. Outdrive	4	SW-338027
338028	S35-3W Center Diff. Outdrive	2	SW-338028
338039	S35-3/4 Series Center HET Spur Gear (46T)	1	SW-338039
338043	S35-3/4 Series Servo Saver Nut with Screw Fixed	1	SW-338043
338048	S35-4 Series Servo Saver Shaft	2	SW-338048
338056	S35-4 Series Lower Arm Hinge Pin (68.5mm)	4	SW-338056
338057A	S35-4/e EVO Series T7 Aluminum Front Upper Arm Holder	1	SW-338057A
338058A	S35-4/e EVO Series 5mm T7 Aluminum Front Lower Arm Plate (FF)	1	SW-338058A
338059	S35-4 Series T7 Aluminum Front Lower Arm Holder (FR)	1	SW-338059

Part No.	Part Name	Q`ty in Use	Item No.
338067	S35-4 Series Emulsion/Bladder 2 Ways Syatem Shock Cap	4	SW-338067
338068	S35-4 Series T7 Aluminum Shock Stud (L)	2	SW-338068
338070B	S35 Series Rear Upper Sus. Arm Ball Stud (7.0mm Hex)	2	SW-338070B
338080	S35 Series Lightened Wheel Hub for 8mm Axil (L5.5mm)	4	SW-338080
338082A	S35-4/GT2/E Series T7075 Aluminum Intensity Rear/Front Narrow Lower Suspension Plate (RF)	1	SW-338082A
338112	S35-4 Series T7075 Aluminum Front Shock Tower for High Capacity Shock System	1	SW-338112
338113	S35-4 Series T7075 Aluminum Rear Shock Tower for High Capacity Shock System	1	SW-338113
338122-R	S35/S350/Apollo Series Lightened Steering Knuckle Pivot Ball Turnbuckle (Clockwise)	2	SW-338122-R
338122-L	S35/S350/Apollo Series Lightened Steering Knuckle Pivot Ball Turnbuckle (Anti-Clockwise)	2	SW-338122-L
338123	S35-4/e EVO Series Servo Saver Post Lay-Down Type (Hard Coated)	1	SW-3380123
338124	S35-4/e EVO Series T7 Aluminum Steering Plate	1	SW-3380124
338125	S35-4e EVO Series T7075 Aluminum Lightened Main Chassis	1	SW-3380125
338126	S35-4/e EVO Series T7 Aluminum Settring Bellcrank Upper Part-A	1	SW-3380126
338127	S35-4e Electric Buggy Series Aluminum Center Diff. Mount	1	SW-3380127
338128	S35-4e Electric Buggy Series T7 Aluminum Motor Mount	1	SW-3380128
338129	S35-4e Electric Buggy Series T7 Aluminum Center Diff/Motor Unit Mount (CF)	1	SW-3380129
340003	S35-3 Series Pro-composite Carbon Front Upper Arm Cover Set (1mm)	2	SW-340003
340016	S35-4 Series Pro-composite Carbon Rear Wheel Hub Adjust Plate (R=L)	4	SW-340016
348005	S35-4/e EVO Series Pro-composite Carbon Steering Knuckle Plate (L&R)	2	SW-348005
348007	S35-4/e EVO Series Pro-composite Carbon Steering Bellcrank Plate	1	SW-348007
348008	S35-4e EVO Electric Series Pro-composite Carbon Center Diff. Plate	1	SW-348008
348009	S35-4e EVO Electric Series Pro-composite Carbon Steering Servo Mount Plate	1	SW-348009
400002	O-ring S5 4.8X1.5	6	SW-400002
400005	Shock Spring Adjust Nut O-Ring	4	SW-400005
400006	Shock Seal O-Ring	8	SW-400006
400009	Shock Boot (L)	2	SW-400009
400010	Shock Boot (S)	2	SW-400010
400013	S104 Shock Seal O-ring 2x2.7mm	4	SW-400013
400019	S350 New BBS System Shock Spring Adjust Nut O-Ring	4	SW-400019
400020	S350 New BBS System Shock Seal O-Ring	4	SW-400020
400024S	S35 Series BBS System Hex-Cell Shock Bladder (Soft)	4	SW-400024S
420010	Antenna Cup	1	SW-420010
510080A	SWORKz 1/8 Off Road Formula Race Wing Decal	1	SW-228008BK
510091	SWORKz Origional Logo Sticker	1	SW-510091
518002	S35-4E Body Decal Sheet	1	SW-258001C-E
518003	S35 Series Falcon ST-4 Clean Body Shell Window Mask	1	SW-258001C-E
540001	Hook & Loop strap 2x27cm	4	SW-540001
610019	S35-3 Series Servo Saver Spring Dusty Protect Sponge	1	SW-610019
610020	S35-3 Series Center Big Bore Plastic Diff. Case Gasket	1	SW-610020
610023	S35-3W Diff. Gasket (0.4T)	2	SW-610023
115004A	Servo Saver Spring	1	SW-115004A
115005	Rear Sway Bar 2.8mm	1	SW-115005
115006	Rear Sway Bar 2.6mm	1	SW-115006
115008A	Front Sway Bar 2.3mm	1	SW-115008A
115019	Body Clip	2	SW-115019
115035A	Front Sway Bar 2.2mm	1	SW-115035A
115182	S35-4 Black Competition Front Shock Spring (US4-Dot)(62X1.6X7.5)	2	SWC-115182
115191	S35 Series Competition Black Line Rear Shock Spring (RM3-Dot)(80X1.6X10.0)	2	SWC-115191
116004R	Ball Bearing 6x10x3mm (Red Rubber Case)	4	SW-116004R
116006R	Ball Bearing 8x16x5mm (Red Rubber Case)	14	SW-116006R
116019R	Ball Bearing 5x13x4mm (Red Rubber Case)	4	SW-116019R
117003	Flange Ball Bearing 3x6x2.5mm	4	SW-117003
118003	S35-4 EVO series Servo Saver Spring	1	SW-118003
101004	Washer 3.5X10X0.2mm	12	SW-101004
101010A	M3 Countersunk Washer(GM)	4	SW-101010A
101011	M2.6x6xT0.6mm	4	SW-101011
101012	M3x6xT0.6mm	6	SW-101012
101018	SHIM 13x16x0.2mm	12	SW-101018
101019	SHIM 6.0x10.0x0.2mm	1	SW-101019
101020A	S350 Sries 3mm Countersunk Washers (GM)	2	SW-101020A
101026	SWORKz Aluminum Washer 3X6X1.5mm(GM)	1	SW-101026
101027	S350 BBD Steel Washer 5X14X0.5mm	3	SW-101027
101039	Steel Washer 5x12x0.3mm	6	SW-101039
103001	M3 Nut Lock	18	SW-103001
103003A	Flange M3 Nut Lock (GM)	4	SW-103003A
103004	M2.5mm Nut Lock	8	SW-103004
103005	M4mm Nut Lock (BK)	4	SW-103005
104004	M3x3mm Set Screw	4	SW-104004
104005	M3x4mm Set Screw	4	SW-104005
104009	M3x16mm Set Screw	1	SW-104009
104010	M5x4mm Set Screw (Flat Bottom)	6	SW-104010
104011	M4x4mm Set Screw (Flat Bottom)	1	SW-104011
105001	M3x8mm Cap Screw	1	SW-105001
105005	M3x12mm Cap Screw	6	SW-105005
105006A	M3x28mm Cap Screw full thread	2	SW-105006A

Parts No. List

Part No.	Part Name	Q`ty in Use	Item No.
105012	M3x10mm Cap Screw	2	SW-115012
105013A	M3x25mm Cap Screw	2	SW-105013A
105018	M2x6mm Cap Head Screw	1	SW-105018
105020	M4x10mm Cap Screw	2	SW-105020
105021	M3x6mm Conical Head Screw	4	SW-105021
106002	M3x10mm Hex Soket OH/TP Screw	11	SW-106002
106003	M3x16mm Hex Soket OH/TP Screw	4	SW-106003
106006	M3x20mm Hex Soket OH/TP Screw	3	SW-106006
106007	M3x12mm Hex Soket OH/TP Screw(HT)	3	SW-106007
106008	M3x12mm Hex Soket OH/TP Screw	6	SW-106008
106009	M3x25mm Hex Soket OH/TP Screw	6	SW-106009
106010	M3x6mm Hex Soket OH/TP Screw	7	SW-106010
106013	M2.5x8mm 1.5mmHex Soket OH/ST Screw	6	SW-106013
106015	M3x5mm Hex Soket OH/TP Screw	2	SW-106015
106020	M2.5x5mm 1.5mmHex Soket OH/ST Screw	10	SW-106020
106021A	S35 Series M4x10mm Hex Soket OH/TP Set Screw	4	SW-106021A
106022	M2.5x14mm Soket OH/ST Screw (1.5mmHex)	4	SW-106022
106024	M4x12mm Hex Soket OH/TP Screw	2	SW-106024
106025	M2.5x8mm Hex Soket OH/TP Screw	5	SW-228008BK
108001	M3x12mm FH/ST HEX Screw	26	SW-108001
108003	M3x10mm FH/ST HEX Screw	12	SW-108003
108005	M3x14mm FH/ST HEX Screw	4	SW-108005
108006	M3x8mm FH/ST HEX Screw	12	SW-108006
108007	M3x6mm FH/ST HEX Screw	12	SW-108007
108008	M3x35mm FH/ST HEX Screw	4	SW-108008
108013	M4x8mm FH/ST HEX Screw	6	SW-108013
108010	M4x10mm FH/ST HEX Screw	10	SW-108010
108012	M4x16mm FH/ST HEX Screw	8	SW-108012
108015	M3x16mm FH/ST HEX Screw	2	SW-108015
108019	M2.6x6mm FH/ST HEX Screw	2	SW-108019
108021	M3x18mm FH/ST HEX Screw	2	SW-108021
108029	M2.0x4.6mm FH/ST HEX Screw (1.5mm HexHead)	4	SW-108029

Spare Part List

Item No.	Part Name
SW-228001DG	S35-4 All Series Plastic Inserts Set (Durable)(Gray)(2 Sets)
SW-228002-1	S35-4 Series Plastic Rear Wheel Hub (R=L)(2PC)
SW-228002-2E	S35-4e EVO Series Plastic Front Chassis Shorty Brace
SW-228003A	S35 Series Integrated Wing Mount Set 2.0
SW-228004A	S35-4 Series Plastic Side Guard Set with Stopper
SW-228005H-F	S35-4 Series Front Lower Arm in Hard Material (1PC)
SW-228006	S35 Series Shock End/Body Mount/Ball Ends Set (2Set)
SW-228006-5	SWORKz 1/8 Series Plastic Linkage Ball End (Shorty)(2PC)
SW-228007-2	S35-4E Buggy Series Plastic Center Diff. Mount (2PC)
SW-228008BK	SWORKz 1/8 Off Road Formula 2.0 Race Wing (BK)
SW-228015H	SWORKz S35-4 Series Arched-Bridge-System Rear Lower Arm Set (Hard)(1PC)
SW-228016-1.2-8	SWORKz 1/8 BBS Precision Plastic Shock Piston(1.2X8Holes)(2PC)
SW-228016-1.3-8	SWORKz 1/8 BBS Precision Plastic Shock Piston(1.3X8Holes)(2PC)
SW-228016-DIY	SWORKz 1/8 BBS Precision Plastic Shock Piston(DIY)(4PC)
SW-228017	S35-4/e EVO Series Lay-Down Type Steering Bellcrank Set
SW-228018	S35-4e EVO Electric Series Steering Servo Mount & Rear Upper Deak Holder Set
SW-228019	S35-4e EVO Electric Series Receiver Box & Accessories Set
SW-228020	S35-4e EVO Electric Series Battery Case (1PC)
SW-228021	SWORKz 1/8 Steering and Throttle Servo Horn Set
SW-2501097B	S35 Series Front Bumper (2PC)
SW-2501121C	S35/S350 Series Ball End Set with Shock Plastic Parts
SW-2503260	S353 Series Plastic Inserts Set
SW-2503260-04	S35/S350 Series Plastic Knuckle Inserts Set
SW-2503261A	S35-3/GT Series Gear Box Set (Fit 5x13x4mm Ball Bearing)
SW-2503264A	S35-3 Series Front Steering Knuckle (Type 2.0)
SW-2503270-01	S35-3 Series Front Upper Arms (2pc)
SW-2503270-02	S35-3 Series Rear Upper Arm Outside Ball Ends (2pc)
SW-2503270-03	S35-3 Series Front Steering Ball Ends (4pc)
SW-210046	S350 Series LDS Universal Cross Drive Shaft Set 92.5mm (1pc)
SW-210079A	S35-4 Plastic Center Big Bore HET Diff Case
SW-210091	S35-3W Plastic Front/Rear Big Bore Diff Case
SW-200193	Antenna Tube
SW-258001C-E	S35 Series Falcon ST-4 Clean Body Shell (Pre-Cut for EP Buggy)
SW-328001	S35-3/4 Series HET Diff. Bevel Gear Set
SW-330015	Pin M2.2x9.9mm
SW-330117A	S350 Series Knuckle Pivot Ball Washer (GM)
SW-330118A	S350 Series Knuckle Pivot Ball Nut (GM)
SW-330119	Front Upper Arm HingPin
SW-330122A	S350 Wheel Nut (HC)
SW-330123A	S350 EVO Rear Upper Sus. Arm Turnbuckles M5x38mm
SW-330124	Pin M3.0x16.8mm
SW-330125	Rear Upper Sus. Arm Ball Stud
SW-330126A	S350 EVO Steering Turnbuckle M4x40mm
SW-330134	Shock Ball Stud 6mmxL6.7
SW-330136	Sway Bar Ball Stud
SW-330138B	S350 Series Aluminum Shock Cap Stud (-1.3mm)(2PC)
SW-330243	SWORKz 3x18mm Shock Hex Screw Set (Anti-Clockwise)
SW-330245	SWORKz 1/8 Motor Pinion Gear 15T
SW-330399B	S35-3 Series Aluminum Rear Chassis Brace Mount (GM)
SW-330557	S350 New BBS System Shock Seal Cap (GM)
SW-330560B	S35 New BBS System Shock Spring Adjust Nut (BK)
SW-330633	S350 BBS System +5.6mm Shock Body L
SW-330634	S350 BBS System +5mm Shock Body S
SW-330663A	S35-3 Series Steel R-Center Drive Shaft (115mm)
SW-330661A	S35-T/S35 Series Competition Center Drive Join (5mm set screw)
SW-330694A	S35 E Series 6mm Steel Ball Stud
SW-330767A	S35-3 Series Steel F-Center Dive Shaft (88mm)
SW-330770	S35-3 Series Aluminum Rear Lower Fully Adjustable Toe-In Block (A)
SW-330779	S35-4/e EVO Series Steering Linkage Steel Ball Stud 7mm(L6)
SW-330779T-ST	S35-4/e EVO Steering Linkage Steel Ball Stud 7mm (L6 Thread Type)
SW-330782	S35-3 Series Rear Hub Carriers Hinge Pin
SW-338011	S35-3 series Pinion Gear Stopper (5x7x5.1mm)(4PC)
SW-338023	S35-3W Pinion Gear 13T
SW-338024	S35-3W Crown Gear 43T
SW-338025	S35-4 HET Bevel Gear Shaft (2pc)
SW-338027	S35-4 Front/Rear HET Diff. Outdrive (2pc)
SW-338028	S35-4 Center HET Diff. Outdrive (2pc)
SW-338039	S35-3/4 Series Center HET Spur Gear (46T)
SW-338043	S35-3/4 Series Servo Saver Nut with Screw Fixed
SW-338048	S35-4 Series Servo Saver Shaft(2PC)
SW-338056	S35-4 Series Lower Arm Hinge Pin (68.5mm)(2pc)
SW-338057A	S35-4/e EVO Series T7 Aluminum Front Upper Arm Holder
SW-338058A	S35-4/e EVO Series 5mm T7 Aluminum Front Lower Arm Plate (FF)
SW-338059	S35-4 Series T7 Aluminum Front Lower Arm Holder (FR)
SW-338062A	S35-4 Series BBS System Teflon Coated Durable Shock Shaft (L)

Spare Part List

Item No.	Part Name
SW-338063A	S35-4 Series BBS System Teflon Coated Durable Shock Shaft (S)
SW-338067	S35-4 Series Emulsion/Bladder 2 Ways Syatem Shock Cap (2PC)
SW-338068	S35-4 Series T7 Aluminum Shock Stud (L)(2PC)
SW-338070B	S35 Series Rear Upper Sus. Arm Ball Stud (7.0mm Hex)
SW-338080	S35/S350 Series Lightened Wheel Hub for 8mm Axil (L5.5mm)
SW-338082A	S35-4/GT2/E Series T7075 Aluminum Intensity Rear/Front Narrow Lower Suspension Plate (RF)
SW-338112	S35-4 Series T7075 Aluminum Front Shock Tower for High Capacity Shock System
SW-338113	S35-4 Series T7075 Aluminum Rear Shock Tower for High Capacity Shock System
SW-338122-R	S35/S350/Apollo Series Lightened Steering Knuckle Pivot Ball Turnbuckle (Clockwise)(2PC)
SW-338122-L	S35/S350/Apollo Series Lightened Steering Knuckle Pivot Ball Turnbuckle (Anti-Clockwise)(2PC)
SW-338123	S35-4/e EVO Series Servo Saver Post Lay-Down Type (Hard Coated)
SW-338124	S35-4/e EVO Series T7 Aluminum Steering Plate
SW-338125	S35-4e EVO Series T7075 Aluminum Lightened Main Chassis
SW-338126	S35-4/e EVO Series T7 Aluminum Settring Bellcrank Upper Part-A
SW-338127	S35-4e Electric Buggy Series Aluminum Center Diff. Mount
SW-338128	S35-4e Electric Buggy Series T7 Aluminum Motor Mount
SW-338129	S35-4e Electric Buggy Series T7 Aluminum Center Diff/Motor Unit Mount (CF)
SW-348005	S35-4/e EVO Series Pro-composite Carbon Steering Knuckle Plate (L&R)(1PC)
SW-348007	S35-4/e EVO Series Pro-composite Carbon Steering Bellcrank Plate(1PC)
SW-348008	S35-4e EVO Electric Series Pro-composite Carbon Center Diff. Plate(1PC)
SW-348009	S35-4e EVO Electric Series Pro-composite Carbon Steering Servo Mount Plate(1PC)
SW-340003	S35-3 Series Pro-composite Carbon Front Upper Arm Cover Set (1mm)
SW-340016	S35-4 Series Pro-composite Carbon Rear Wheel Hub Adjust Plate (R=L)(2PC)
SW-400002	O-ring S5 4.8X1.5
SW-400005	Shock Spring Adjust Nut O-Ring
SW-400006	SWORKz 1/8 BBS Shock Seal O-Ring (8PC)
SW-400009	Shock Boot (L)
SW-400010	Shock Boot (S)
SW-400013	SWORKz Shock Seal O-ring 2x2.7mm (8PC)
SW-400019	S350 New BBS System Shock Spring Adjust Nut O-Ring (4pc)
SW-400020	S350 New BBS System Shock Seal O-Ring (4pc)
SW-400024S	S35 Series BBS System Hex-Cell Shock Bladder (Soft)(4PC)
SW-420010	Antenna Cup
SW-510091	SWORKz Origional Logo Sticker (2PC)
SW-610019	S35-3 Series Servo Saver Spring Dusty Protect Sponge (2pc)
SW-610020P	S35 Series Center Big Bore Diff. Paper Gasket (0.4T)(3PC)
SW-610023P	S35-4 HET Diff. Paper Gasket (0.4T)(3PC)
SW-101004	Washer 3.5X10X0.2mm
SW-101010A	M3 Countersunk Washer(GM)
SW-101011	M2.6x6xT0.6mm
SW-101012	M3x6xT0.6mm
SW-101018	SHIM 13x16x0.2mm
SW-101019	SHIM 6.0x10.0x0.2mm
SW-101020A	S350 Sries 3mm Countersunk Washers (GM)
SW-101021	M3x8xT0.8mm
SWC-101027	S35 BBD Steel Washer 5X14X0.5mm
SW-101039	Steel Washer 5x12x0.3mm
SW-103001	M3 Nut Lock
SW-103003A	Flange M3 Nut Lock (GM)
SW-103004	M2.5mm Nut Lock
SW-103005	M4mm Nut Lock (BK)(10PC)
SW-104004	M3x3mm Set Screw
SW-104005	M3x4mm Set Screw
SW-104009	M3x16mm Set Screw
SW-104010	M5x4mm Set Screw (Flat Bottom)
SW-104011	M4x4mm Set Screw (Flat Bottom)
SW-105001	M3x8mm Cap Screw
SW-105005	M3x12mm Cap Screw
SW-105006A	M3x28mm Cap Screw full thread
SW-105012	M3x10mm Cap Screw (10pc)
SW-105013A	M3x25mm Cap Screw
SW-105018	M2x6mm Cap Head Screw (10PC)
SW-105020	M4x10mm Cap Screw (8PC)
SW-105021	M3x6mm Conical Head Screw (10PC)
SW-106001	M3x8mm Hex Soket OH/TP Screw
SW-106002	M3x10mm Hex Soket OH/TP Screw
SW-106003	M3x16mm Hex Soket OH/TP Screw
SW-106006	M3x20mm Hex Soket OH/TP Screw
SW-106007	M3x12mm Hex Soket OH/TP Screw (HT)
SW-106008	M3x12mm Hex Soket OH/TP Screw
SW-106009	M3x25mm Hex Soket OH/TP Screw
SW-106010	M3x6mm Hex Socket OH/TP Screw
SW-106013	M2.5x8mm 1.5mmHex Soket OH/ST Screw
SW-106015	M3x5mm Hex Soket OH/TP Screw
SW-106020	M2.5x5mm 1.5mmHex Soket OH/ST Screw

Item No.	Part Name
SW-106021A	S35 Series M4x10mm Hex Soket OH/TP Set Screw
SW-106022	M2.5x14mm Socket OH/ST Screw (1.5mmHex)
SW-106024	M4x12mm Hex Soket OH/TP Screw (8PC)
SW-108001	M3x12mm FH/ST HEX Screw
SW-108003	M3x10mm FH/ST HEX Screw
SW-108005	M3x14mm FH/ST HEX Screw
SW-108006	M3x8mm FH/ST HEX Screw
SW-108007	M3x6mm FH/ST HEX Screw
SW-108008	M3x35mm FH/ST HEX Screw
SW-108010	M4x10mm FH/ST HEX Screw
SW-108012	M4x16mm FH/ST HEX Screw
SW-108013	M4x8mm FH/ST HEX Screw
SW-108015	M3X16mm FH/ST HEX Screw (10pc)
SW-108019	M2.6x6mm FH/ST HEX Screw
SW-108021	M3x18mm FH/ST HEX Screw (10PC)
SW-108029	M2.0x4.6mm FH/ST HEX Screw (1.5mm HexHead)
SW-115005	Rear Sway Bar 2.8mm
SW-115006	Rear Sway Bar 2.6mm
SW-115008A	Front Sway Bar 2.3mm
SW-115019	Body Clip
SW-115035A	S35/350 Series Front Sway Bar 2.2mm
SWC-115182	S35-4 Black Competition Front Shock Spring (US4-Dot)(62X1.6X7.5)
SWC-115191	S35 Series Competition Black Line Rear Shock Spring (RM3-Dot)(80X1.6X10.0)
SW-116004R	Ball Bearing 6x10x3mm (Red Rubber Case)(4PC)
SW-116006R	Ball Bearing 8x16x5mm (Red Rubber Case)(10PC)
SW-116019R	Ball Bearing 5x13x4mm (Red Rubber Case)(4PC)
SW-117003	Flange Ball Bearing 3x6x2.5mm (2pc)
SW-118003	S35-4 EVO series Servo Saver Spring

Option Part List

Item No.	Part Name
SW-116010B	High Performance Ball Bearing 5x10x4mm(coffee)(4pc)
SW-250050	SWORKz 1/8 Off Road Formula Bulkhead Wing (4PC)/ Front Upper Arm's Wing Set (4PC)
SW-250050A	SWORKz 1/8 Off Road Formula Bulkhead Lexan Wing (0.8mm)(4PC)
SW-2501529H	S35/S350 Series Hard Plastic Chassis Brace Set
SW-2503260FO	S353 Series Colorful Plastic Inserts Set (FO)
SW-2503260FY	S353 Series Colorful Plastic Inserts Set (FY)
SW-2503260LB	S353 Series Colorful Plastic Inserts Set (SB)(2 SET)
SW-2503270-01H	S35-3 Series Front Upper Arms with Hard Material (2pc)
SW-210079AH	S35-4 Plastic Center Big Bore HET Diff Case (Hard)
SW-210091H	S35-4 Plastic Front/Rear Big Bore HET Diff Case (Hard)
SW-218006	S35-4 Series HET Front/Rear Big Bore Diff. Set (43T)
SW-218008	S35-3 Series HET Diff. Combo Kit
SW-218026-F	S35-4/e EVO Series BBS Higher Capacity Shock Complete Front Set
SW-218026-R	S35-4/e EVO Series BBS Higher Capacity Shock Complete Rear Set
SW-218030	S35-4WE to Evo Upgrade Conversion Kit
SW-218031	S35-4 EVO Lay-Down Type Steering Bellcrank Upgrade Package
SW-228013BK	SWORKz 1/8 Off Road Pro-Speed 2.0 Race Wing (BK)(Pre-Holes)
SW-228013WH	SWORKz 1/8 Off Road Pro-Speed 2.0 Race Wing (WH)(Pre-Holes)
SW-228013FY	SWORKz 1/8 Off Road Pro-Speed 2.0 Race Wing (FY)(Pre-Holes)
SW-228001RD	S35-4 Series Colorful Plastic Inserts Set (Red)
SW-228005S-F	S35-4 Series Front Lower Arm in Soft Material (1PC)
SW-228005M-F	S35-4 Series Front Lower Arm in Medium Material (1PC)
SW-228015S	SWORKz S35-4 Series Arched-Bridge-System Rear Lower Arm Set (Soft)(1PC)
SW-228015M	SWORKz S35-4 Series Arched-Bridge-System Rear Lower Arm Set (Medium)(1PC)
SW-228015U	SWORKz S35-4 Series Arched-Bridge-System Rear Lower Arm Set (Ultra-Hard)(1PC)
SW-228022ABK	SWORKz 1/8 Off Road Pro Race Wing (BK)(W/o Holes)
SW-228022AWH	SWORKz 1/8 Off Road Pro Race Wing (WH)(W/o Holes)
SW-228022AFY	SWORKz 1/8 Off Road Pro Race Wing (FY)(W/o Holes)
SW-228013BK	SWORKz 1/8 Off Road Pro-Speed 2.0 Race Wing (BK)(Pre-Holes)
SW-300049	SWORKz S35-3/S350 Series Rear Stainless Chassis End Protection (2PC)
SW-330115	Steering Knuckle Pivot Ball Turnbuckle
SW-330116	14mm Knuckle Pivot Ball
SW-330125A	S350 Series Aluminum Rear Upper Sus. Arm Ball Stud (4pc)
SW-330134A	S350 Series Aluminum Shock Ball Stud (4pc)
SW-330136A	S350 Series Aluminum Sway Bar Ball Stud (4pc)
SW-330168A	S35-3 Series Rear Chassis Blance wight 15g (2pc)
SW-330398A	SWORKz S350 Series Pro Wheel Nut (GM)
SW-330420	S350 Series Knuckle Pivot Ball Balance Nut (5.5g) (2pc)
SW-330424	S350 Series Aluminum Wing Holder (RED)
SW-330424B	S350 Series Aluminum Wing Holder (BK)
SW-330424G	S350 Series Aluminum Wing Holder (GM)
SW-330505A	S35 Series Lightened Wheel Hub for 8mm Axil (L6.5mm)
SW-330506A	S35 Series Lightened Wheel Hub for 8mm Axil (L5.0mm)
SW-330235	SWORKz 1/8 Motor Pinion Gear 13T
SW-330239	SWORKz 1/8 Motor Pinion Gear 14T
SW-330246	SWORKz 1/8 Motor Pinion Gear 16T
SW-330247	SWORKz 1/8 Motor Pinion Gear 17T
SW-330817	SWORKz 1/8 EP Motor Pinion Gear 18T
SW-330818	SWORKz 1/8 EP Motor Pinion Gear 19T
SW-330819	SWORKz 1/8 EPMotor Pinion Gear 20T
SW-330663	S35-3 Series Aluminum R-Center Drive Shaft (115mm)
SW-330767	S35-3 Series T-7075 Aluminum F-Center Dive Shaft (88mm)
SW-330779T-AL	S35-4/e EVO Steering Linkage Aluminum Ball Stud 7mm (L6 Thread Type)(4PC)
SW-338030-57	S35-4 Series High Density Spur Gear for Big Bore Diff. Case (57T)
SW-338030-58	S35-4 Series High Density Spur Gear for Big Bore Diff. Case (58T)
SW-338030-59	S35-4 Series High Density Spur Gear for Big Bore Diff. Case (59T)
SW-338030-60	S35-4 Series High Density Spur Gear for Big Bore Diff. Case (60T)
SW-338034E	S35-4e EVO Series Lightened Aluminum Front Chassis Shorty Brace
SW-338070A	S35 Series Rear Upper Arm Aluminum Ball Stud (2PC)
SW-338075	S35-4 Series T7 Aluminum Rear Wheel Hub (R=L)(2PC)
SW-338078-25	SWORKz Uni-Design 2-Way System Aluminum Steering Servo Horn 25T
SW-338078-23	SWORKz Uni-Design 2-Way System Aluminum Steering Servo Horn 23T
SW-338117-19	S35-4e/GT2e/T2e Series High Density Motor Pinion Gear 19T
SW-338117-20	S35-4e/GT2e/T2e Series High Density Motor Pinion Gear 20T
SW-338117-21	S35-4e/GT2e/T2e Series High Density Motor Pinion Gear 21T
SW-338117-22	S35-4e/GT2e/T2e Series High Density Motor Pinion Gear 22T
SW-338117-23	S35-4e/GT2e/T2e Series High Density Motor Pinion Gear 23T
SW-338117-24	S35-4e/GT2e/T2e Series High Density Motor Pinion Gear 24T
SW-338122-R	S35/S350/Apollo Series Lightened Steering Knuckle Pivot Ball Turnbuckle (Clockwise)(2PC)
SW-338122-L	S35/S350/Apollo Series Lightened Steering Knuckle Pivot Ball Turnbuckle (Anti-Clockwise)(2PC)
SW-338124P	S35-4/e EVO Series T7 Aluminum Pro Steering Plate
SW-340003A	S35-3 Series Pro-composite Carbon Front Upper Arm Cover (1.5mm)(2PC)
SW-400022A-M	S35 Series BBS System Pro Shock Bladder (Medium)(8PC)
SW-400024M	S35 Series BBS System Hex-Cell Shock Bladder(Medium)(4PC)
SWC-116006C	SWORKz Competition 8x16x5mm Ball Bearing (Metal Case)(6PC)

Item No.	Part Name
SWC-116019A	SWORKz Competition 5x13x4mm Ball Bearing (Metal Case)(4PC)
SWC-116019B	SWORKz Competition 5x13x4mm Ball Bearing (Metal Case/Japan)(4PC)
SW-218001	S35/350 Series Font Sway Bar Set (2.0/2.1/2.2/2.3/2.4/.2.5/2.6/2.8mm)
SW-218002	S35/350 Series Rear Sway Bar Set (2.4/2.5/2.6/2.7/2.8/3.0mm)
SWC-218022-E	SWORKz S35-4E/T2e/GT2e Electric Competition Ball Bearing Kit (Metal Case)(18PC)
SW-348003-10	SWORKz S35-4 Series Pro-composite Carbon Arched-Bridge-System Rear Lower Arm Cover(1.0mm)(2PC)
SW-348003-15	SWORKz S35-4 Series Pro-composite Carbon Arched-Bridge-System Rear Lower Arm Cover (1.5mm)(2PC)
SW-348003-20	SWORKz S35-4 Series Pro-composite Carbon Arched-Bridge-System Rear Lower Arm Cover (2.0mm)(2PC)
SWC-340007	S35-3 Series Pro-composite Carbon Front Upper Done Force Wing Set
SWC-338015	S35-3 T-7075AL Rear Hub Carry for Wide Suspension (R=L)(1pc)
SW-338075	S35-4 Series T7 Aluminum Rear Wheel Hub (R=L)(2PC)
SWC-115163	S35 Series Black Competition Front Shock Spring (M4-Dot)(75X1.6X8.75)
SWC-115164	S35 Series Black Competition Front Shock Spring (M3-Dot)(75X1.6X9.0)
SWC-115165	S35 Series Black Competition Front Shock Spring (M2-Dot)(75X1.6X9.25)
SWC-115182	S35-4 Black Competition Front Shock Spring (US4-Dot)(62X1.6X7.5)
SWC-115184	S35-4 Black Competition Front Shock Spring (US2-Dot)(62X1.6X8.0)
SWC-115190	S35 Series Competition Black Line Rear Shock Spring (RM4-Dot)(80X1.6X9.75)
SWC-115192	S35 Series Competition Black Line Rear Shock Spring (RM2-Dot)(80X1.6X10.25)
SWC-218007A	S35 Series Evolution-CVA Drive Shaft Set 92.5mm(1 Sets)
SWC-218007D	S35 Series Advance-CVD Drive Shaft Set 92.5mm(1 Sets)
SWC-338071	S35 Series Advance-CVD Drive Axil (1PC)
SWC-338072	S35 Series Advance-CVD Drive Shaft (92.5mm)(1PC)
SWC-338073	S35 Series Evolution-CVA Drive Axil (1PC)
SWC-338074	S35 Series Evolution-CVA Drive Shaft (92.5mm)(1PC)
SWC-338076	S35 Series E-CVA/A-CVD Pin M2.5x14 (2PC)
SWC-338077	S35-4 Series E-CVA/A-CVD Axil Join (2PC)
SWC-228012	1/8 E-CVD/A-CVA Axil Holder (10PC)
SWC-338102	S35 Series Pro-Titanium Pivot Ball Turnbuckle (2PC)
SWC-338103	SWORKz 1/8 Series Pro-Titanium Linkage Turnbuckle (M5x35mm)(2PC)
SWC-338104	SWORKz 1/8 Series Pro-Titanium Linkage Turnbuckle (M4x40mm)(2PC)
SWC-338105	SWORKz Pro-Titanium Linkage Turnbuckle (M3x30mm)(2PC)

S35-4e EVO

1/8 Off Road Brushless Power Pro Buggy



SPEEDMASTER HOBBY CO., LTD.

TEL: +886-3-538-7638

FAX: +886-3-538-7328

No.42, Ruiguang St., Xiangshan Dist.,

Hsinchu City 300, Taiwan (R.O.C.)

www.sworkz.com

508002EVO

Production No. 42230206