S35-T2

1/8 OffRoad Nitro Power Pro Truggy

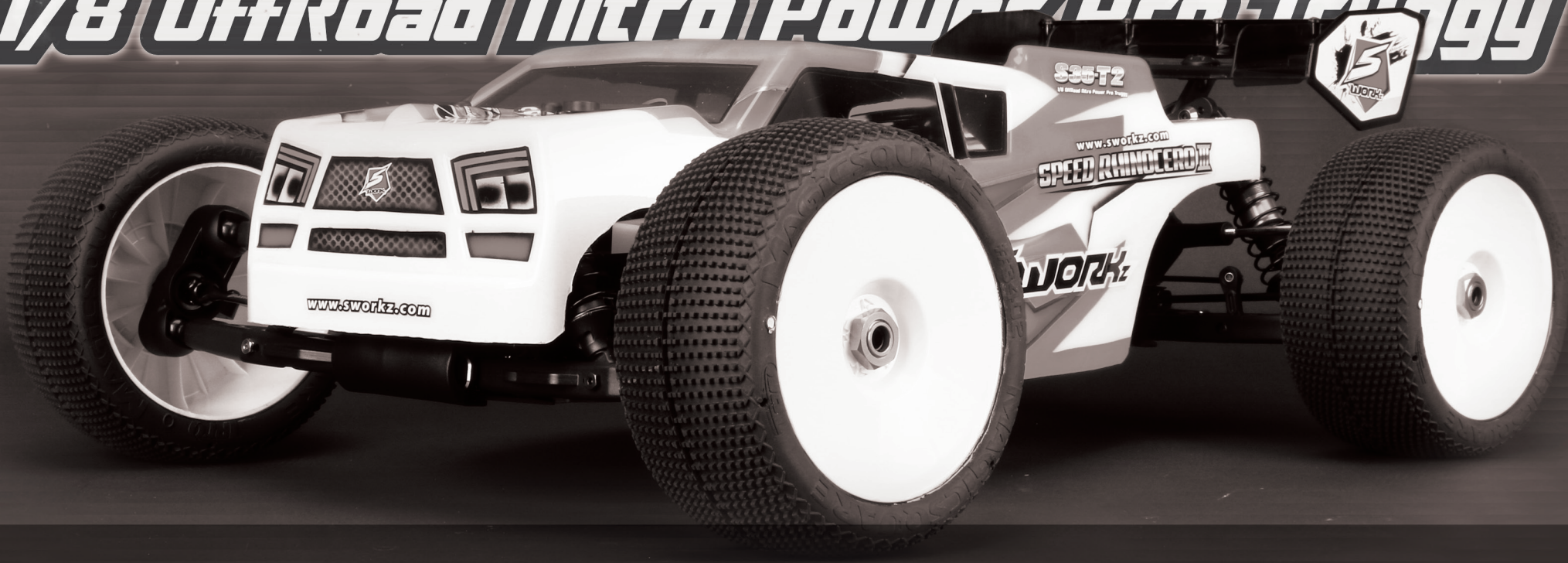

SWORKz S35-T2 INSTRUCTION MANUAL

S35-T2

1/8 OffRoad Nitro Power Pro Truggy

INSTRUCTION

The SWORKz S35-T2 1/8 Nitro Truggy is designed for pure racing. The geometry of the car provides great corner speed with exceptional traction and easy driving control.

The S35-T2 features a T7075 hard anodized and lightened aluminum wide layout chassis that was tested by our factory pilots to guarantee best performance.

The newly developed Truggy HET differentials are included and provide traction that was not possible before.

The new S35-T2 comes with a longer shock layout in the front and rear. The construction of the shocks is adapted to that new optimized layout. The smart holder for shock spring plates makes it almost impossible to lose them anymore.

The steering geometry, with new Ackerman and steering plates, gives the driver a feeling of total control over the SWORKz S35-T2.

With the new toe-in plates, which now contain square inserts, you can adjust the geometry of your SWORKz S35-T2 to fit every track layout and track condition. The lower arms are made of a newly developed composite material and fit perfectly to the new chassis. Side guards were redesigned as well.

With the new lightened wing support you can adjust various positions and the angle of the wing to give your SWORKz S35-T2 the best stability on the track. Together with the "Speed Rhinoceros III" body shell, perfect aerodynamics is achieved.

Another new development in our SWORKz S35-T2 is the totally new rear hub. Made from composite materials combined with 2 carbon plates gives you the possibility for various setups.

There are many changes and smart ideas put into your new SWORKz S35-T2 that makes the car a real winner.

The secret of a modern racing car is the possibility to adapt the setup to every track for top pilots but also have a standard setup that works on most tracks for hobby pilots.

The SWORKz S35-T2 represents these two characteristics in perfection.

The SWORKz development team focused on using materials corresponding to the highest quality standards when designing the car. You will find only 100% SWORKz quality in the S35-T2 kit.

Congratulations on your purchase of the new SWORKz S35-T2 1/8 scale off-road racing Truggy pro kit and thanks for trusting in SWORKz.

Please read this manual carefully, before you start to build and drive your SWORKz S35-T2. This manual contains step-by-step instructions to helping you completing, preparing and fine tuning your Truggy for racing. Updates, setups, and product news will be posted on all SWORKz digital media.

As always, if you should ever have any questions or need help with your SWORKz products, please feel free to contact our official SWORKz dealers and distributors.

S35-T2 Kit Features:

- New T7075 Hard Anodized, Lightend Aluminium Chassis
- New Wide Chassis Design
- New Design Shock Towers
- New Shock Caps
- New Fixed Shock Spring Holder
- New 3mm Updated Rear Shock Studs
- New Ackerman Plate
- New Steering System
- New Servo Saver Aluminium Part
- New Servo Saver Fixable Nut
- New Servo Saver Plate
- New Servo Saver Post Locking Design
- New Steering Balls
- New Steering Knuckle Plates
- New Updated Toe-In Plates with Square Inserts
- New Lightweight Wing Mount
- New Side Guards
- New Lower Front and Rear Arms
- New Front Upper Arms
- New Body Posts Front and Rear
- New Composite Rear Hubs with Carbon Plates
- New Multi Adjustable Ball System for Rear Upper Arms
- New Anticlock Screws for Shocks
- 3 HET Differentials Included
- New Front and Rear Universal Cross Drive Shafts
- 2 Front Chassis Braces Included
- Black Competition Shock Springs Included
- Adjustable Wing Position
- Adjustable Wing Angle

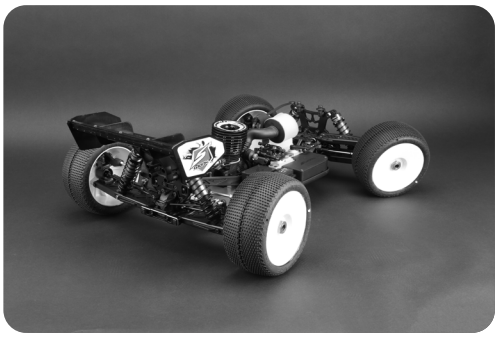

Specification	
Length:	560mm
Width:	410mm
Height:	230mm
Ground Clearance:	80mm
Wheelbase:	375-380mm
Track:	F:366mm /R:368mm
Gear Ratio:	C:48/13T, F/R:46/10T
Weight:	3980g (Race condition)

WARRANTY

Your SWORKz S35-T2 kit warranty covers workmanship and manufacturing defects of the original and unmodified parts. Warranty claims resulting from crashes, abuse, improper operation, improper mounting, improper adjustment or lack of maintenance will not be honored.

Contact your local hobby shop or SWORKz distributor for all claims and questions. Claims must be well documented. All Claims are subject to expert examination approval by SWORKz.

www.sworkz.com

INSTRUCTION	2
Warranty	3
INDEX	4
Required Equipment for Operation	5
Operation Guide	6
Assembly Steps	7-37
Set-up sheet	38
Blank Set-up Sheet	39
S35-T2 Key No. List	40-41
S35-T2 Spare Part List	41-42
S35-T2 Option Part List	43
Explosion view with spare parts number	44-47
End cover	48



This radio controlled racing car is not a toy!

This high-performance R/C model is recommended for ages 14 and older.

Required Equipment for Operation

Radio Gear

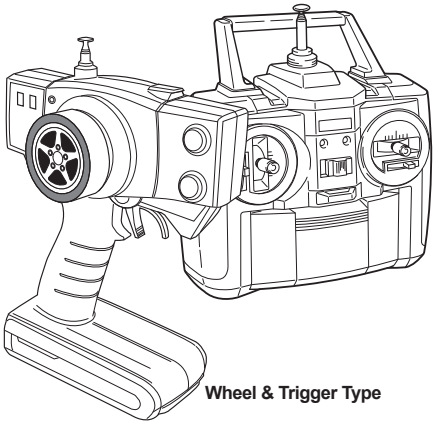

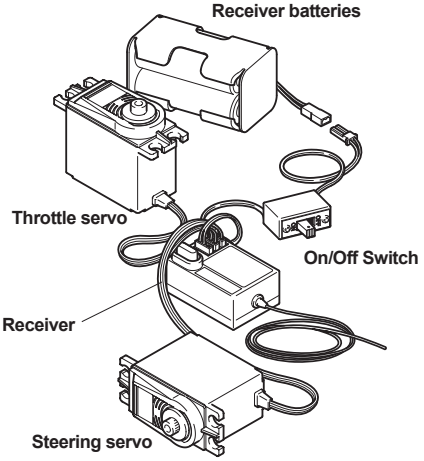

Nitro fuel

We recommend that you use fuel containg 20~25% nitro.



Engine Recommended

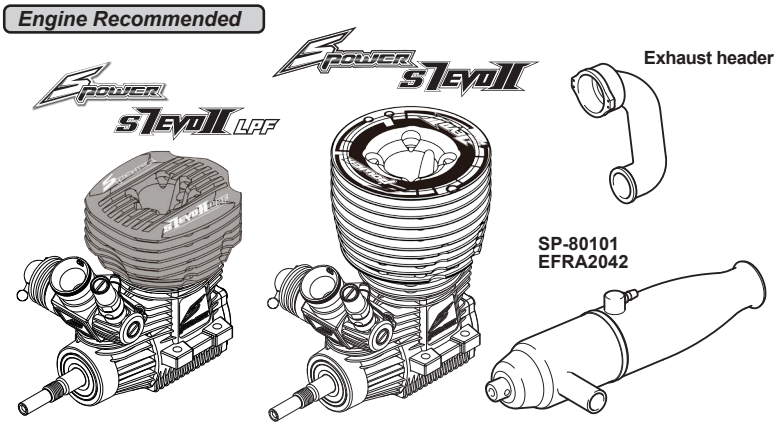

Engine Starting Equipment

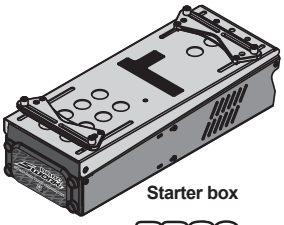

Tools Recommended

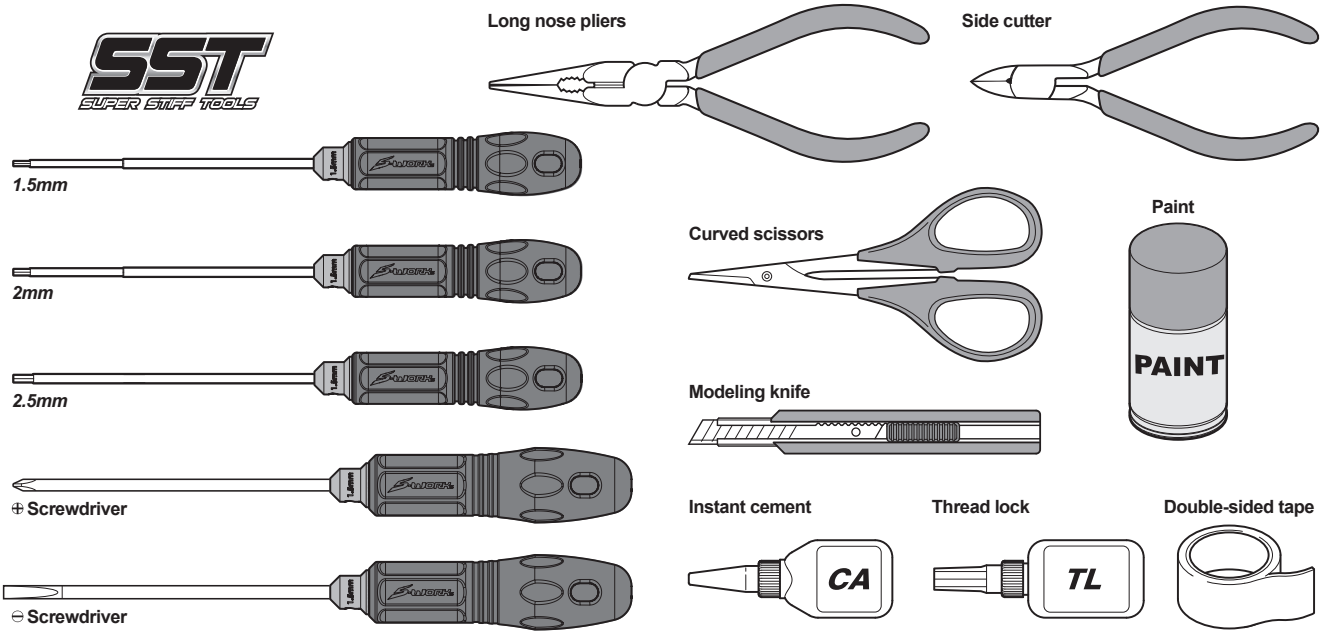

Included items

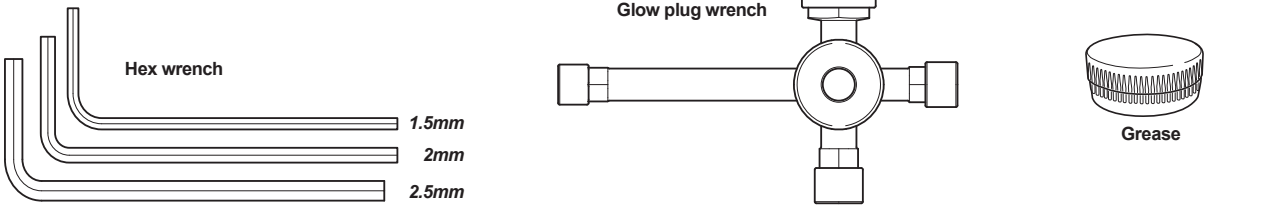

Operation Guide



Assemble front and rear

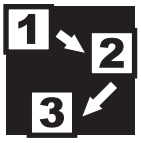

Assemble in the specified order



Assemble both left and right sides



Assemble for 2 sets



Assemble for 4 sets

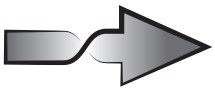

overturn



Thread Locking Compound



Grease

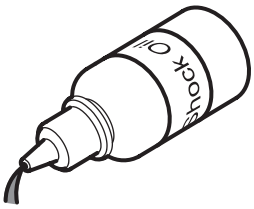

Pure Silicone Oil



Air filter oil

Safety Precautions

The SWORKz S35-T2 is a high performance radio control model which needs to be operated with caution and common sense.
The S35-T2 Kit is not intended for children under the age of 14 without adult supervision. SWORKz shall not be held liable for any loss or damages, whether direct, indirect, act of nature, arising from the abuse or misuse of this product or any other product required while operating this model.
- The nitro fuel can be dangerous is improperly handled.
- Always keep your nitro fuel in a cool area and never use near flame, sparks, or while smoking.
- Keep your nitro fuel, and all other flammables, out of the reach of children.
- Always run your model in a well ventilated area outdoors. Never run your model indoors.
- After running your car, all parts of the engine and exhaust can become extremely hot. Be careful not to touch these parts especially when refueling, or making repairs.
- This model is controlled by your radio controller and is sometimes vulnerable to interference from many outside sources. This interference can cause a loss of control so it is necessary to operate this model in an open area to avoid personal, or property damage. Always ensure turning on your radio first.
- Keep all the parts included in the package out of reach of children.
- This model contains many fast rotating parts. Never touch them during operation.
- Follow the instructions included with your radio gear.
- Never operate your model near people or property. The speed of this model has the potential to injure and or damage people and or property.
- Always use original SWORKz spare parts and option parts.
- Always ensure that the buggy is in proper working condition before use.

BAG B

330015
Pin M2.2x9.9mm ***x4***

400002
O-ring S5 4.8X1.5 ***x4***

101039
Washer 5x12x0.3 ***x2***

116006R
Ball Bearing 8x16x5mm (Red Rubber Case) ***x4***

1 F/R x2

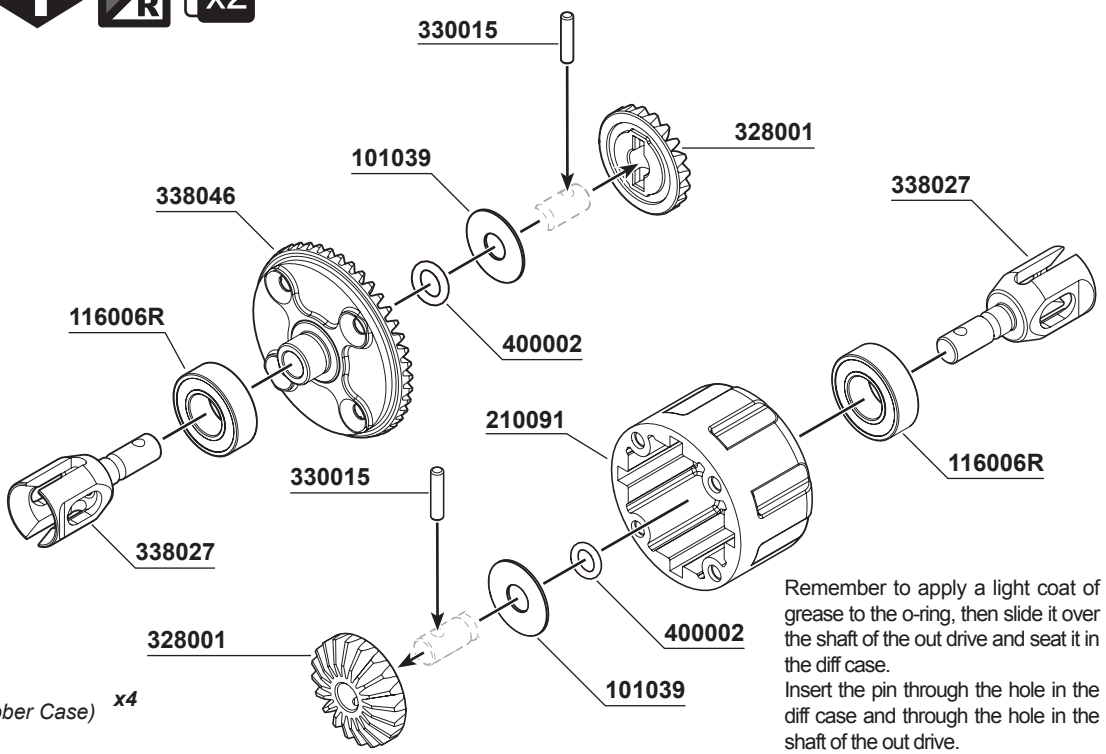

Remember to apply a light coat of grease to the o-ring, then slide it over the shaft of the out drive and seat it in the diff case.
Insert the pin through the hole in the diff case and through the hole in the shaft of the out drive.

2 F/R x2

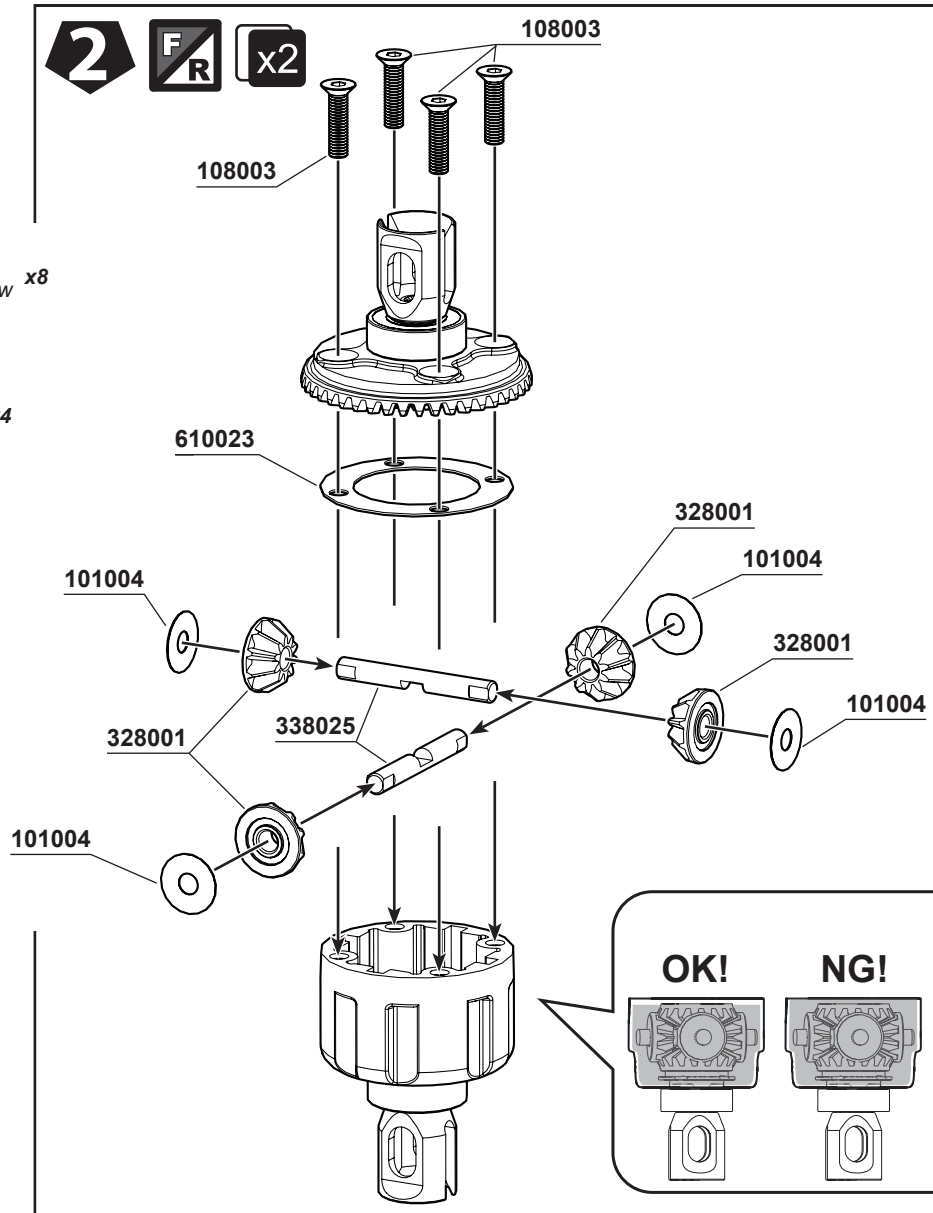

108003
M3x10mm FH/ST HEX Screw ***x8***

338025
S35-3W Bevel Gear Shaft ***x4***

101004
Washer 3.5X10X0.2mm ***x8***

Fill the differentials with oil up to 80% above the satellite gears.
Put the SWORKz Diff. Oil 7000cps for the front Diff. and 3000cps for the rear Diff.

BAG C

330015
Pin M2.2x9.9mm x2

400002
O-ring S5 4.8X1.5 x2

116006R
Ball Bearing 8x16x5mm (Red Rubber Case) x2

101039
Washer 5x12x0.3 x2

3

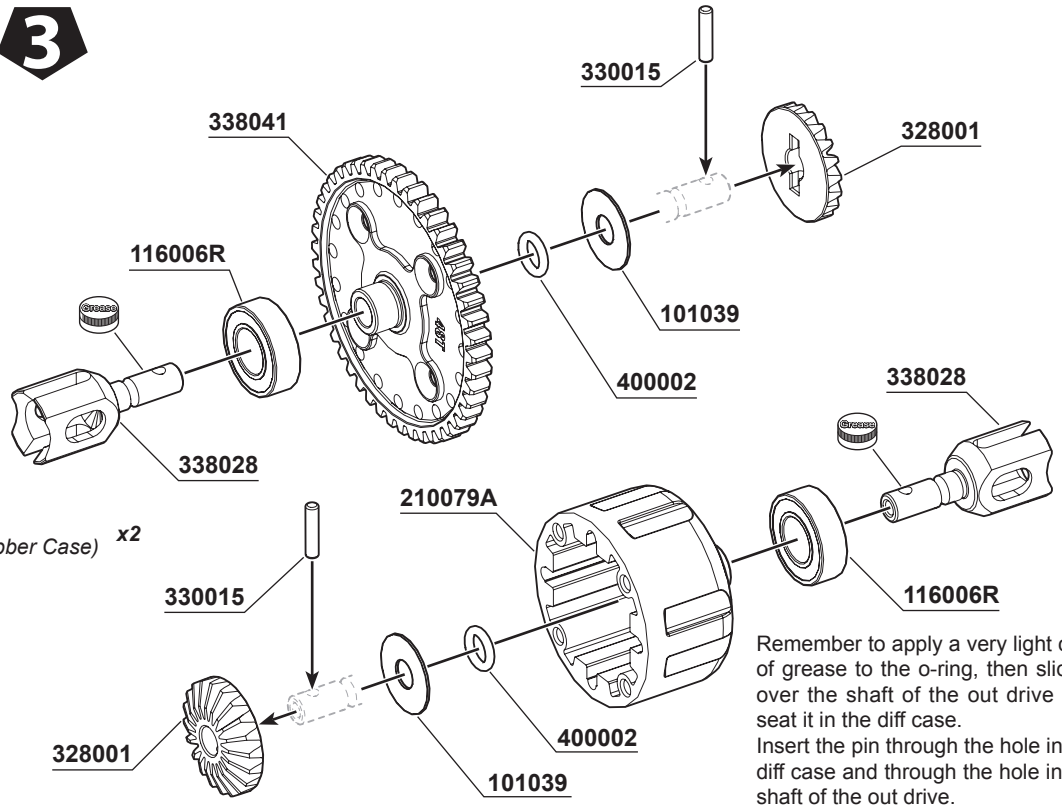

Remember to apply a very light coat of grease to the o-ring, then slide it over the shaft of the out drive and seat it in the diff case.
Insert the pin through the hole in the diff case and through the hole in the shaft of the out drive.

108001
M3x12mm FH/ST HEX Screw x4

338025
S35-3W Bevel Gear Shaft x4

101004
Washer 3.5X10X0.2mm x4

4

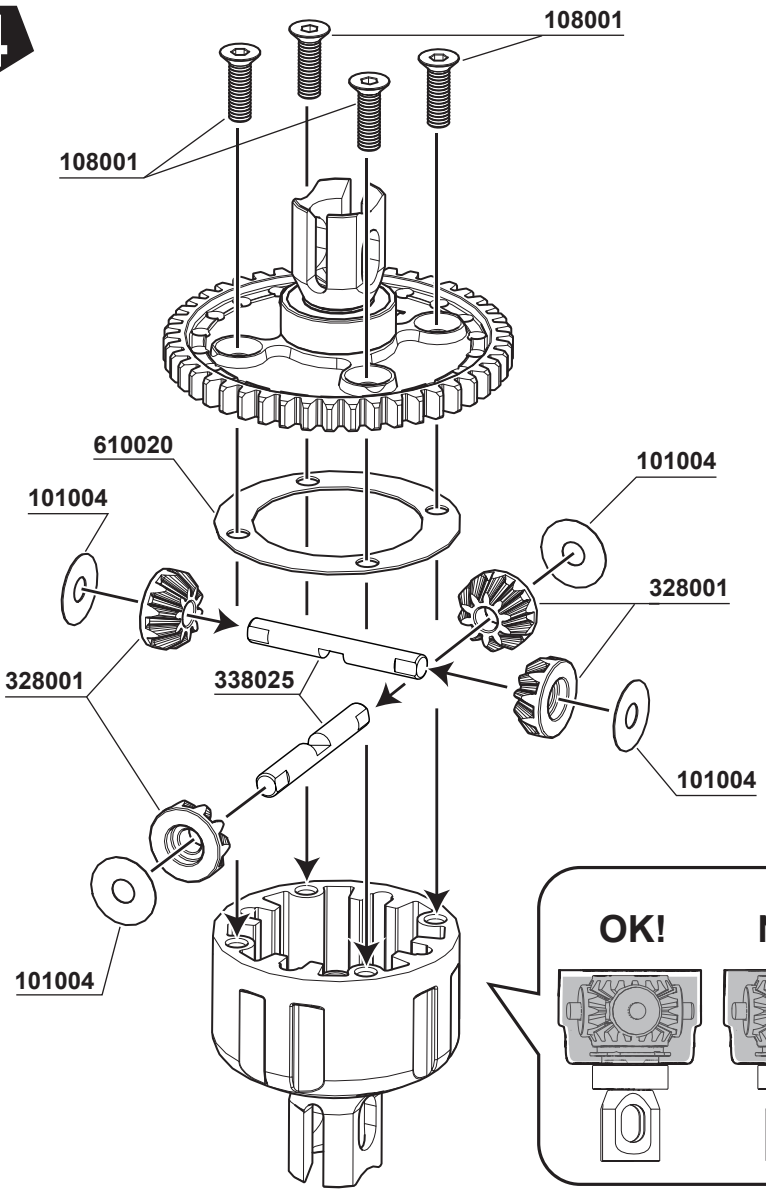

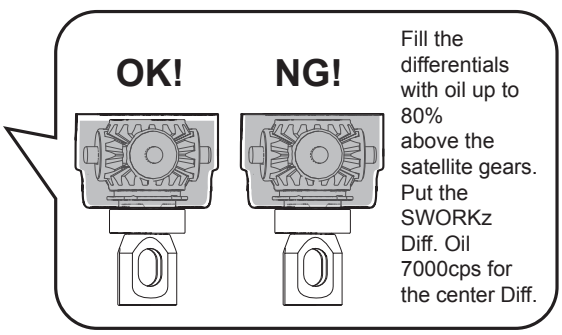

Fill the differentials with oil up to 80% above the satellite gears. Put the SWORKz Diff. Oil 7000cps for the center Diff.

BAG D

5 Front

Pro Tip:
Before installing the M5x4 set screw (104010),
remember to clean the set screw and center driver joint (330661A) first.
Then apply TLC on the set screw.

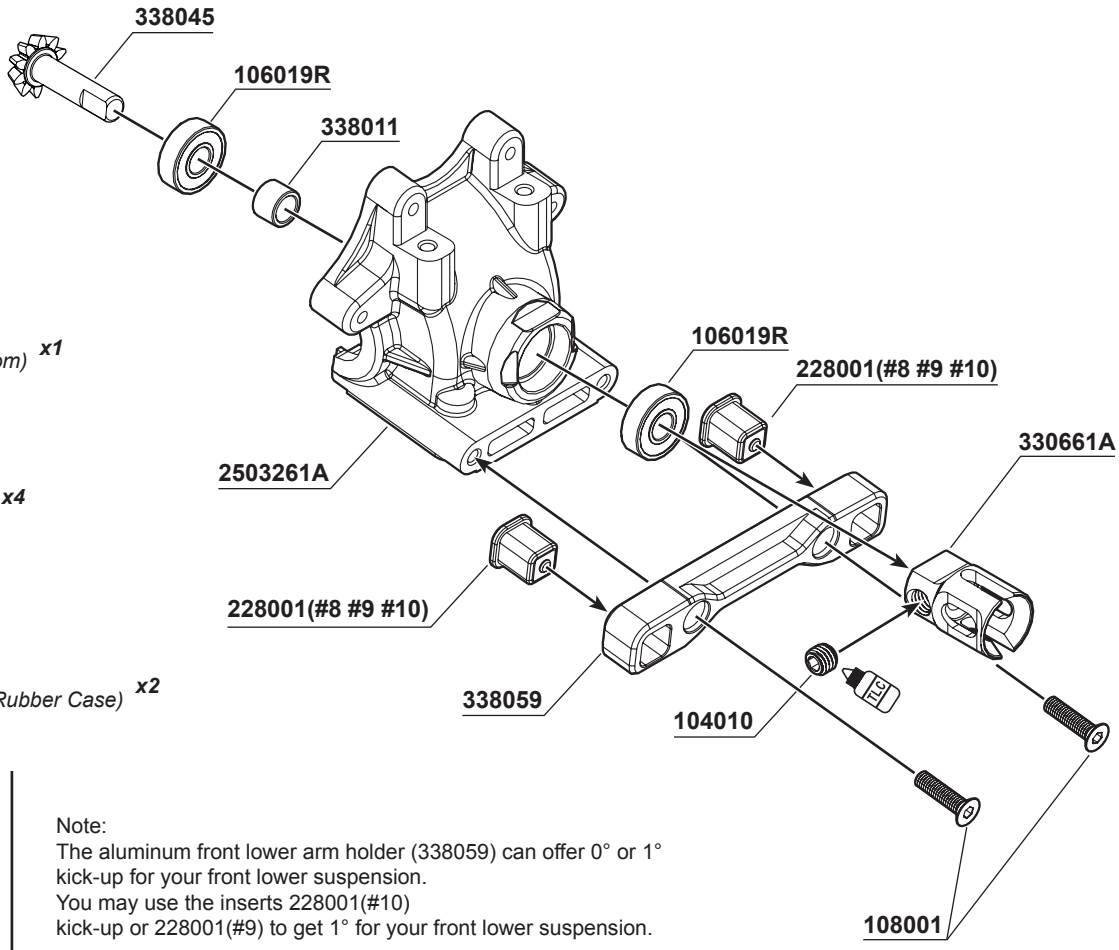



104010
M5x4mm Set Screw (Flat Bottom) ***x1***



108001
M3x12mm FH/ST HEX Screw ***x4***



116019R
Ball Bearing 5x13x4mm (Red Rubber Case) ***x2***

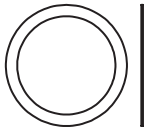

101018
SHIM 13x16x0.2mm ***x4***

Note:
The aluminum front lower arm holder (338059) can offer 0° or 1°
kick-up for your front lower suspension.
You may use the inserts 228001(#10)
kick-up or 228001(#9) to get 1° for your front lower suspension.



338011
S35 series Pinion Gear Stopper (5x7x5.1mm) ***x1***

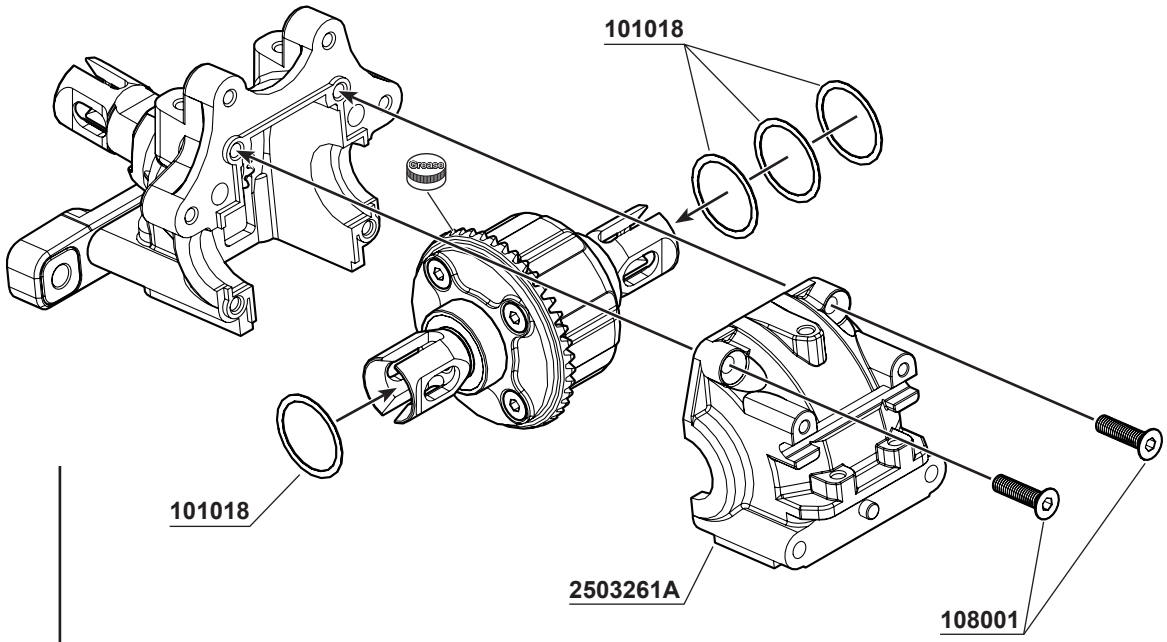

Note:
101018SHIM 13x16x0.2mm
Please use 13x16x0.2mm shims to adjust the play between the crown gear and pinion gear.
Standard suggestion is 1pc shim on the diff crown gear side and 3 pcs on the other side.

BAG D

6 Rear

Pro Tip:
Before installing the M5x4 set screw (104010), remember to clean the set screw and center driver joint (330661A) first. Then apply TLC on the set screw.

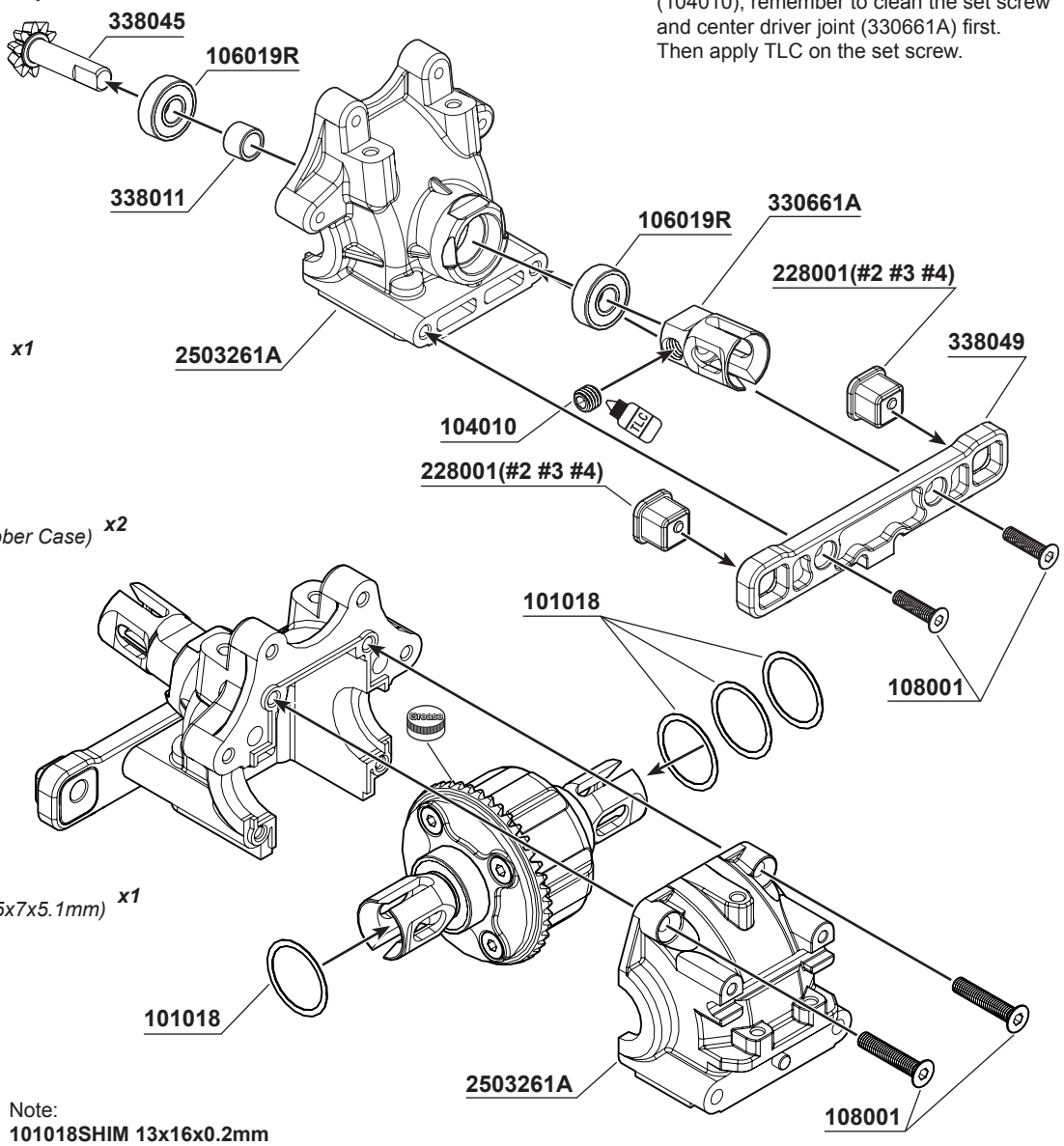

108001
M3x12mm FH/ST HEX Screw ***x4***

104010
M5x4mm Set Screw (Flat Bottom) ***x1***

116019R
Ball Bearing 5x13x4mm (Red Rubber Case) ***x2***

101018
SHIM 13x16x0.2mm ***x4***

338011
S35 series Pinion Gear Stopper (5x7x5.1mm) ***x1***

Note:
101018SHIM 13x16x0.2mm
Please use 13x16x0.2mm shims to adjust the play between the crown gear and pinion gear.
Standard suggestion is 1pc shim on the diff crown gear side and 3 pcs on the other side.

BAG E1

7 L R x2

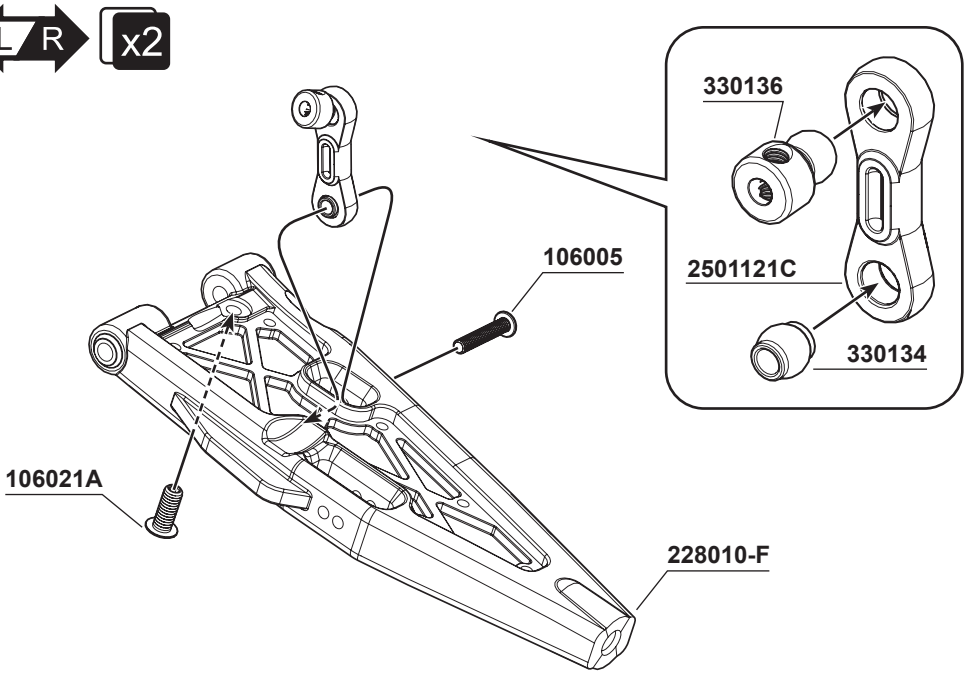

106005
M3x15mm Hex Socket OH/TP Screw ***x2***

106021A
M4x10mm Hex Socket OH/TP Screw ***x2***

BAG E1 8

338056
S35-4 Series Lower Arm Hinge Pin (68.5mm) ***x2***

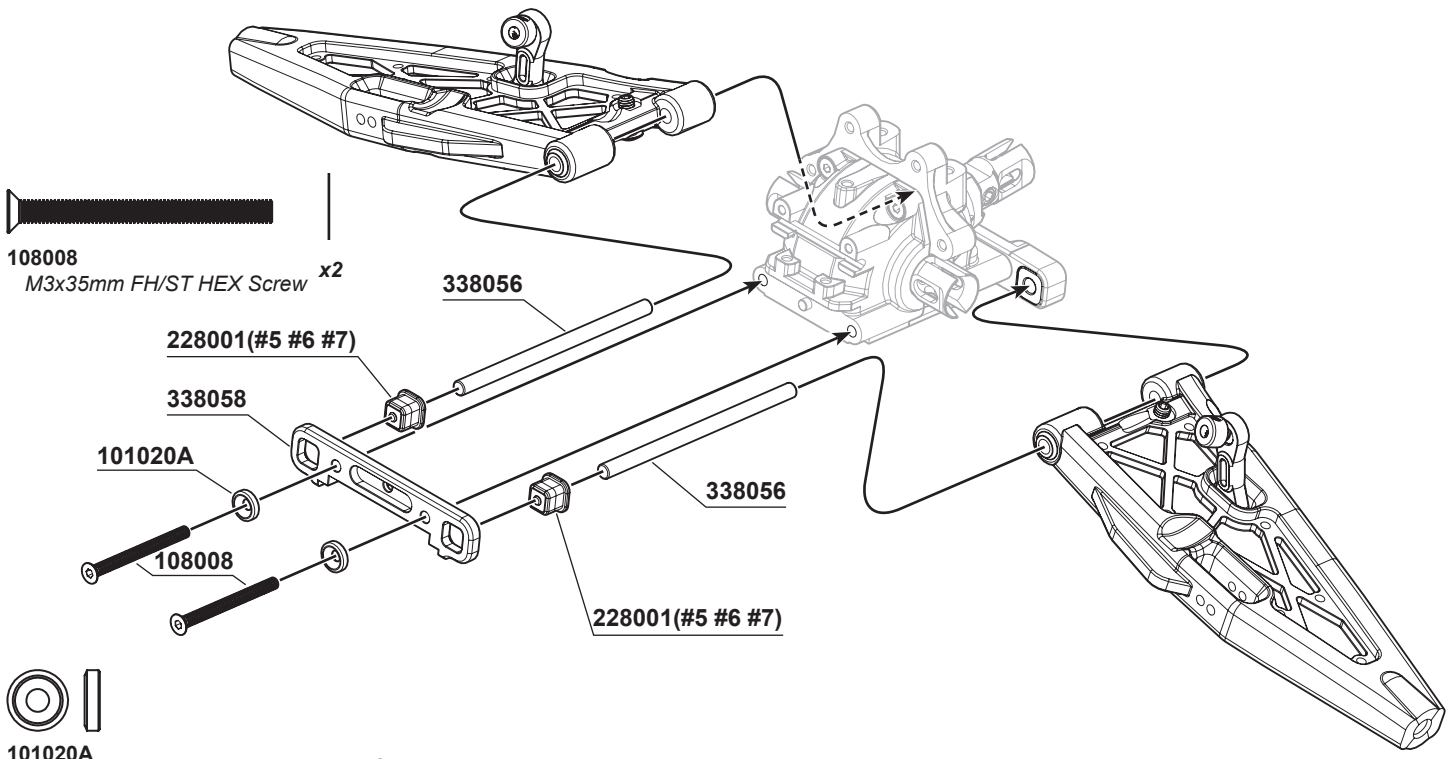

101020A
3mm Countersunk Washers (GM) ***x2***

9

104004
M3x3mm Set Screw ***x2***

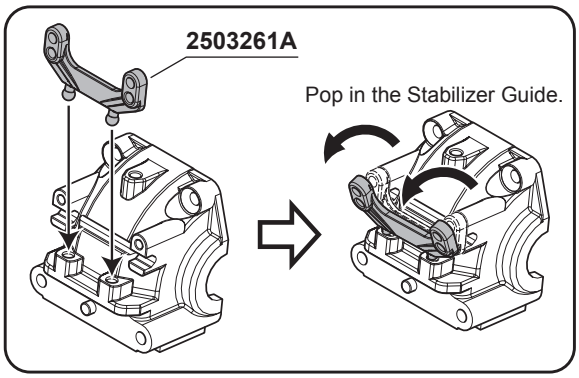

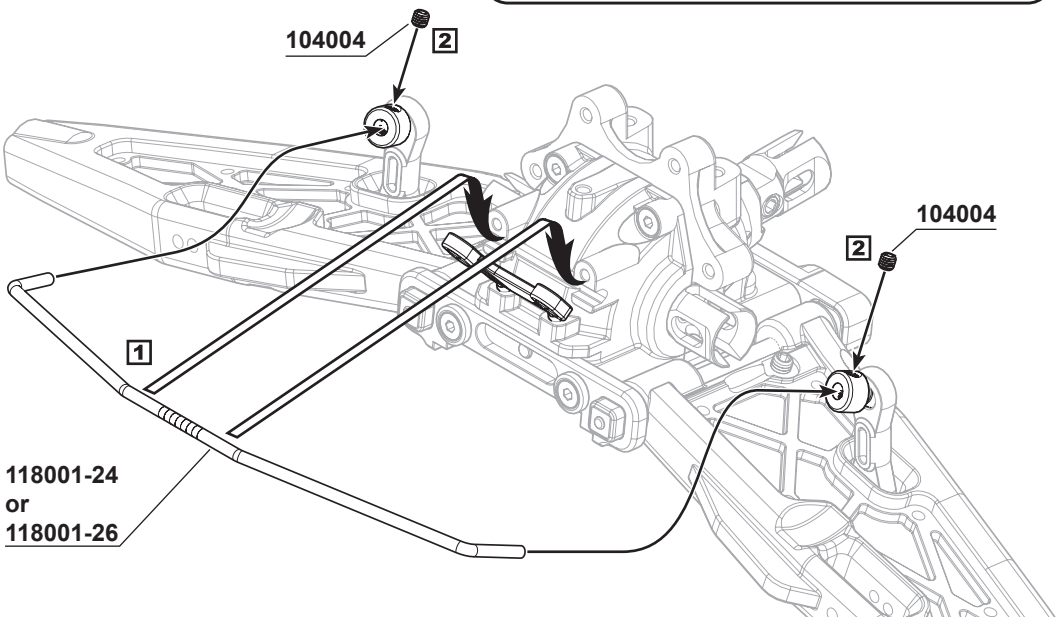

10

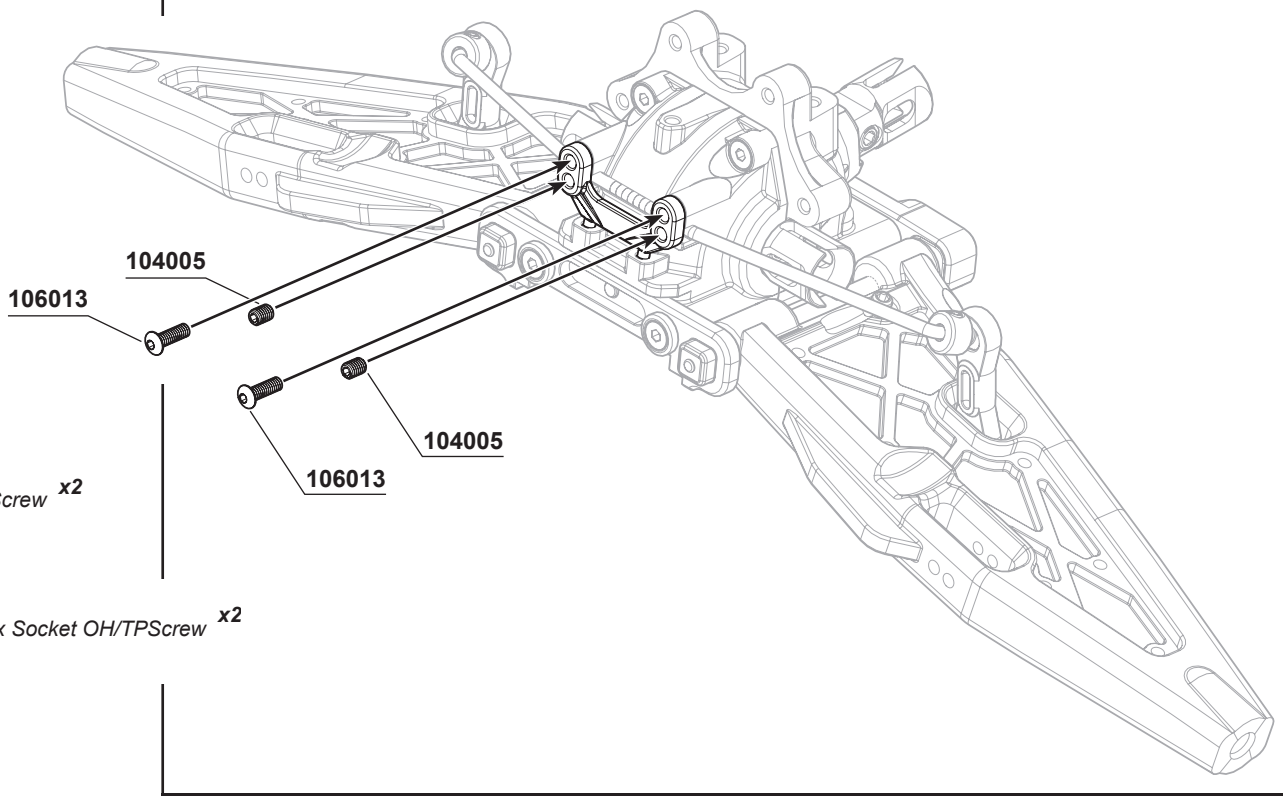

104005
M3x4mm Set Screw x2

106013
M2.5x8mmH ex Socket OH/TPScrew x2

11 L R x2

Note:
The aluminum front upper arm holder (338057) can offer either 0° or + -1° kick-up for your front upper arm suspension.
You may use the inserts 228001(#13) to get 0° kick-up or 228001(#12) to get +-1° for your front upper suspension.

108003
M3x10mm FH/ST HEX Screw x2

108006
M3x8mm FH/ST HEX Screw x2

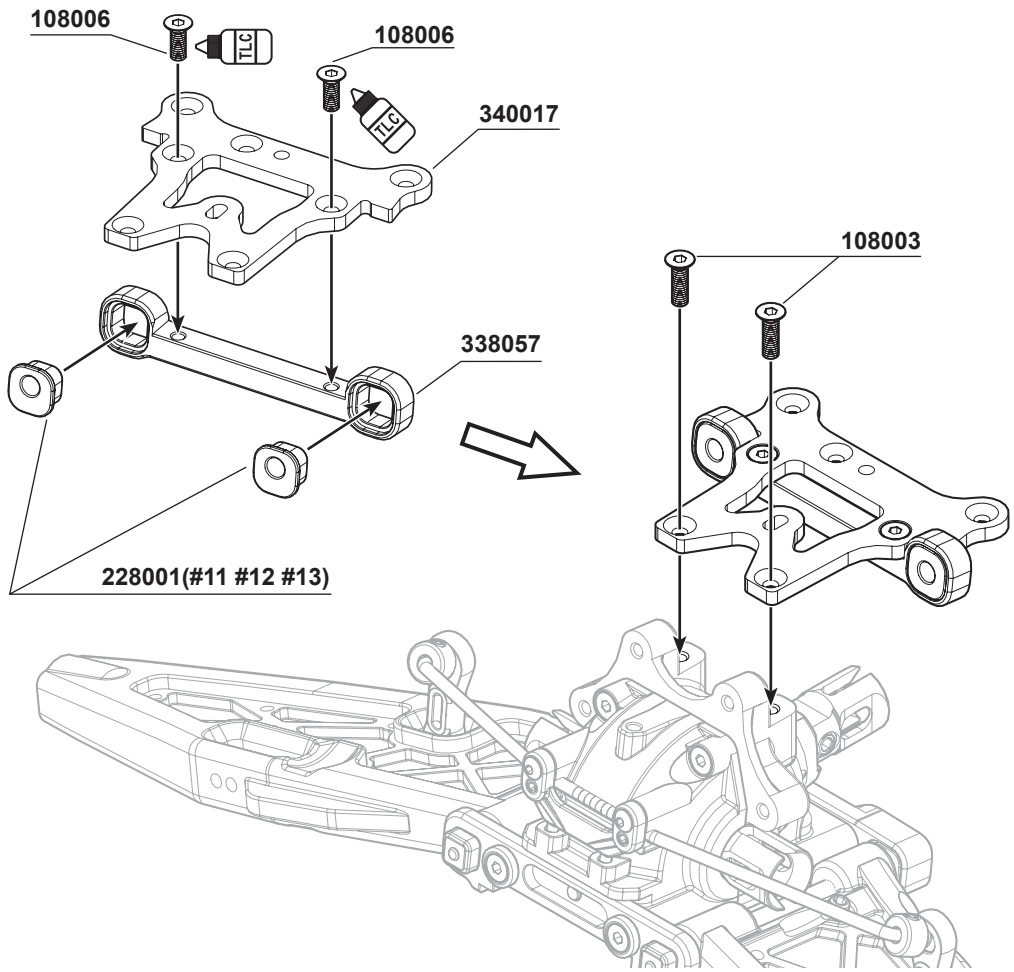

BAG E1

12 L R x2

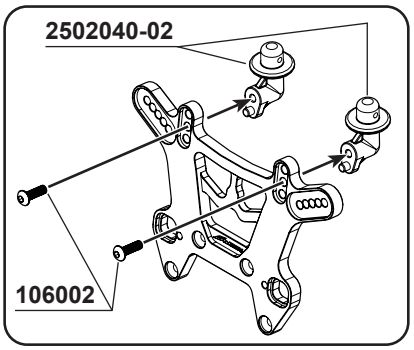

PRO TIP:
The S35-T2 Front Upper Arm Adjust Inserts can give different steering adjustments (Ackerman). Put all inserts behind the front upper arms, you will get faster steering response. Otherwise put all inserts in front of the upper arms, you will get more stable steering response. Try to use 2503260-1 or 2503260-3 to adjust the front upper arm position.



108001
M3x12mm FH/ST HEX Screw ***x4***



106015
M3x5mm Hex Socket OH/TP Screw ***x2***

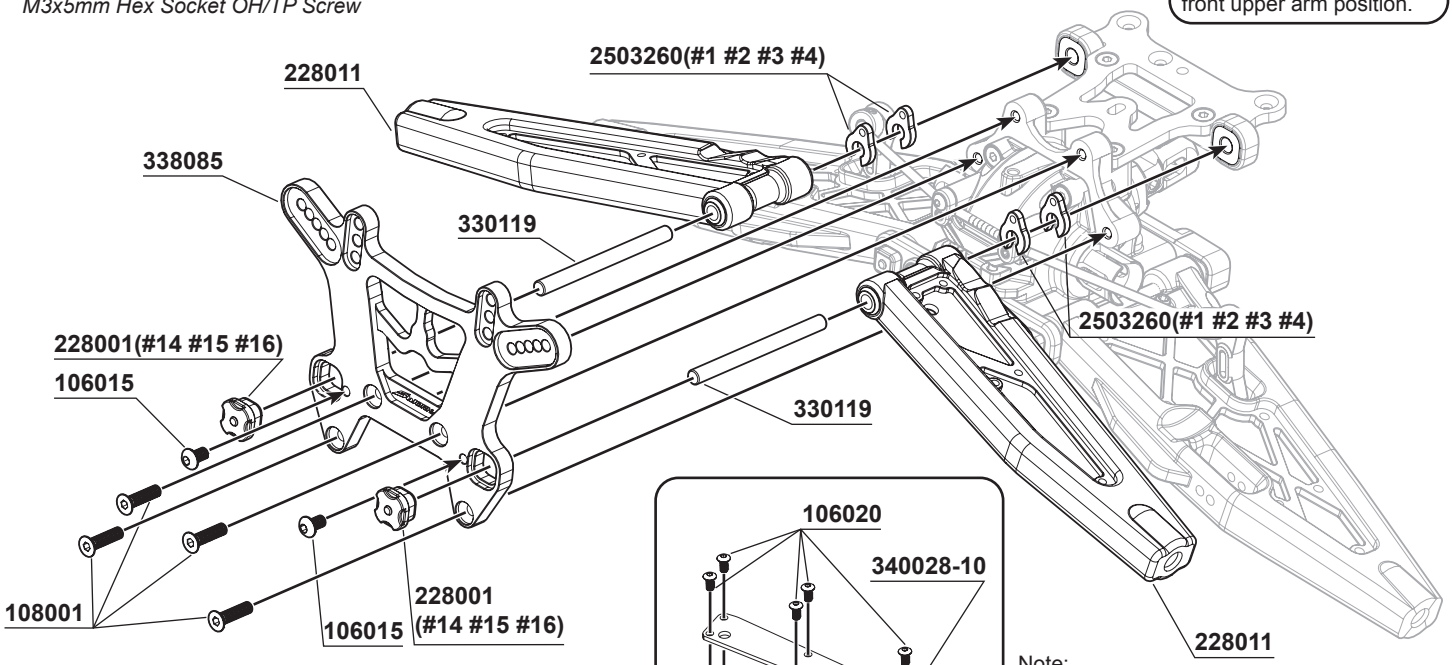

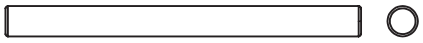

330119
Front Upper Arm Hinge Pin ***x2***

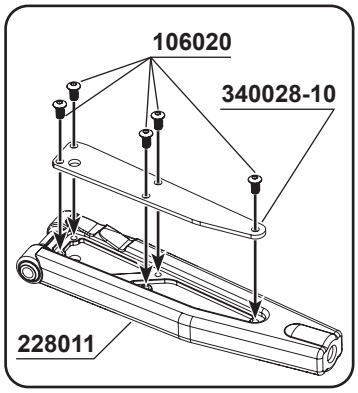

Note:
2503260-1
S35-3 Front Upper Arm Adjust Insert (0.9mm)
2503260-2
S35-3 Front Upper Arm Adjust Insert (1.0mm)
2503260-3
S35-3 Front Upper Arm Adjust Insert (1.1mm)
2503260-4
S35-3 Front Upper Arm Adjust Insert (2.0mm)

13 L R x2

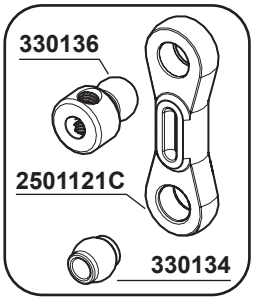



106005
M3x15mm Hex Socket OH/TP Screw ***x2***



106021A
M4x10mm Hex Socket OH/TP Screw ***X2***

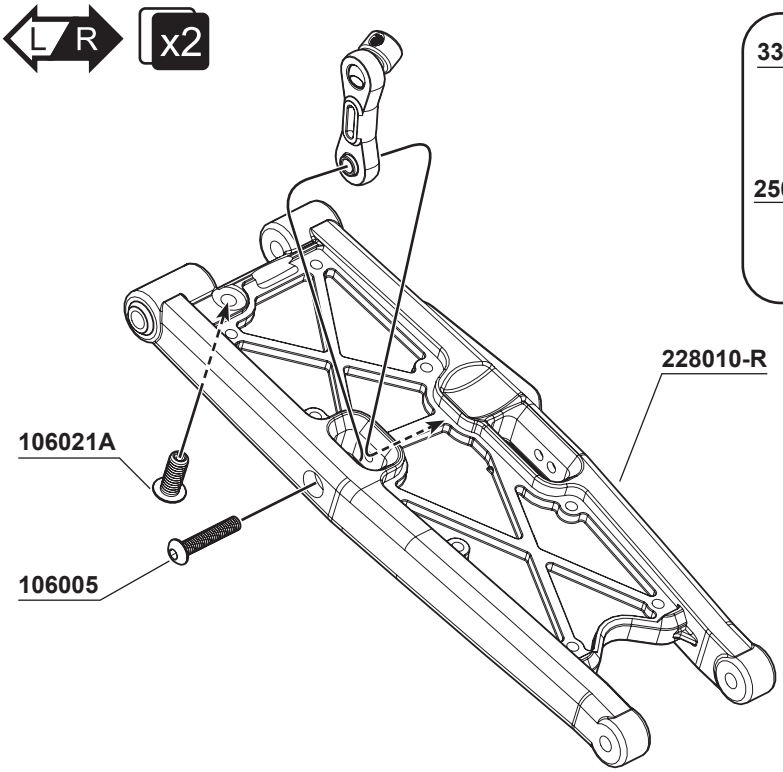

BAG E1

14

108001
M3x12mm FH/ST HEX Screw ***x4***

108005
M3x14mm FH/ST HEX Screw ***x2***

106002
M3x10mm Hex Socket OH/TP Screw ***x2***

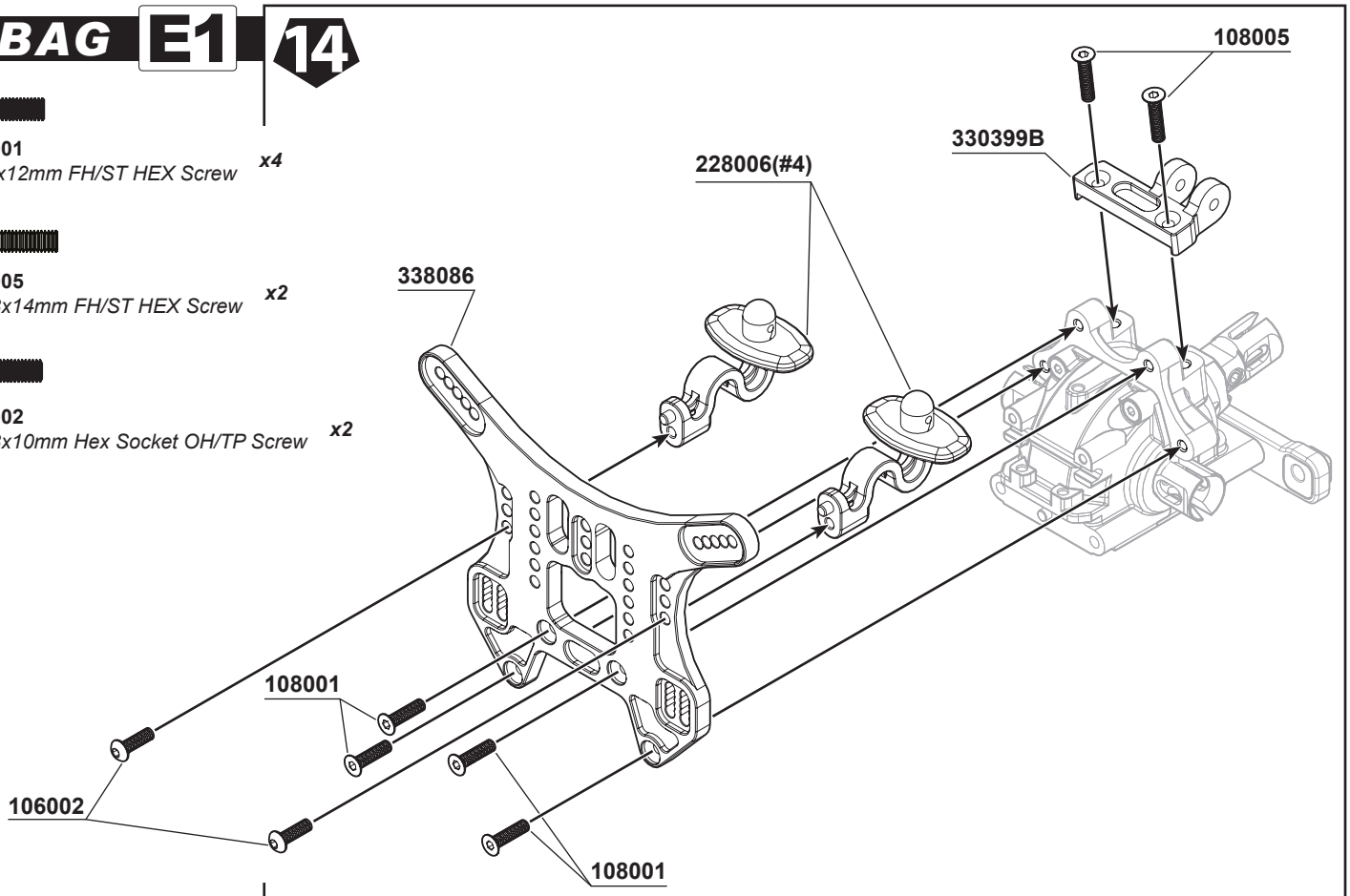

15

108008
M3x35mm FH/ST HEX Screw ***x2***

PRO TIP:
The S35-T2 Aluminum Rear Lower Fully Adjustable Toe-In Block (338014) can use 3 types of square inserts to get 1.0/2.0/3.0 3 different toe in angles. Also plus 3 different rear lower arm kick up degrees.

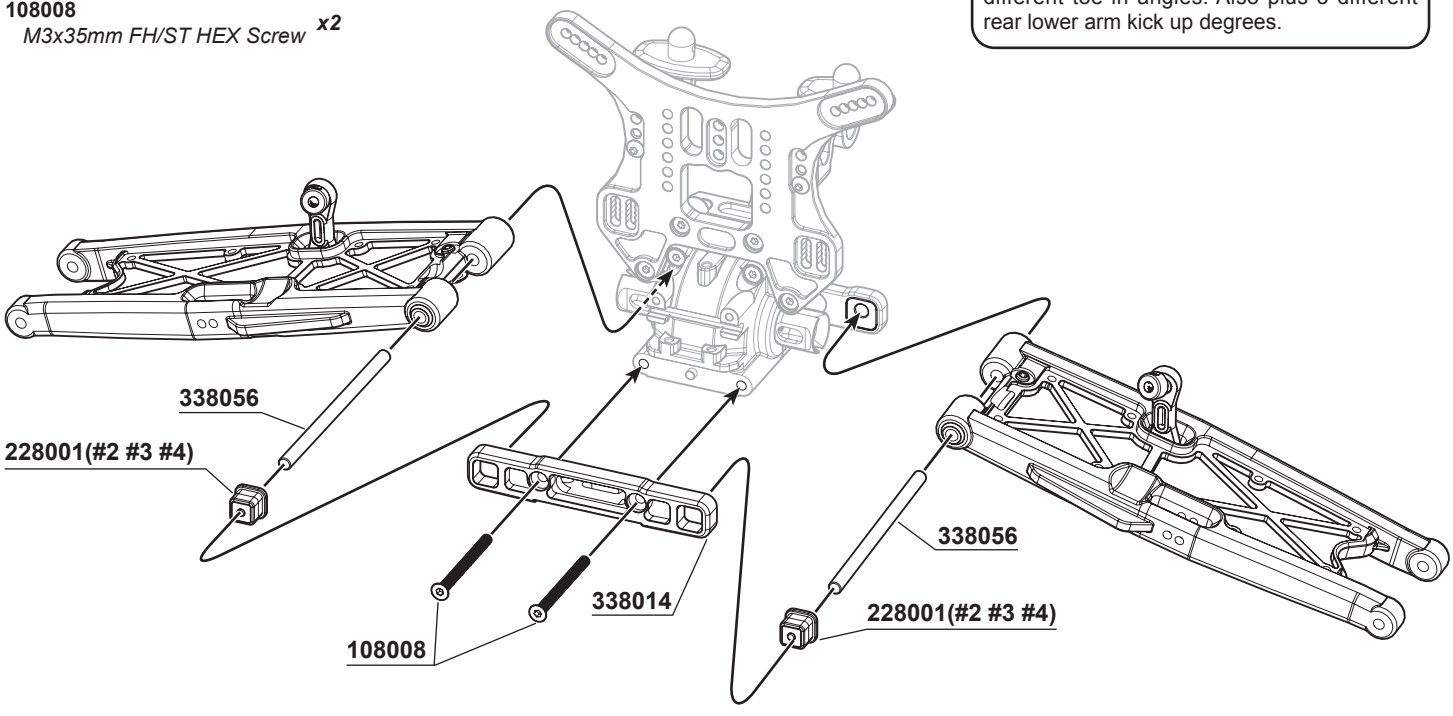

338056
S35-4 Series Lower Arm Hinge Pin (68.5mm) ***x2***

OPTION:

228001-2	S35-4 Series Rear Lower Arm Holder Square Insert (+1/+1)
228001-3	S35-4 Series Rear Lower Arm Holder Square Insert (0/+1)
228001-4	S35-4 Series Rear Lower Arm Holder Square Insert (0)

BAG E1

16

104004
M3x3mm Set Screw ***x2***

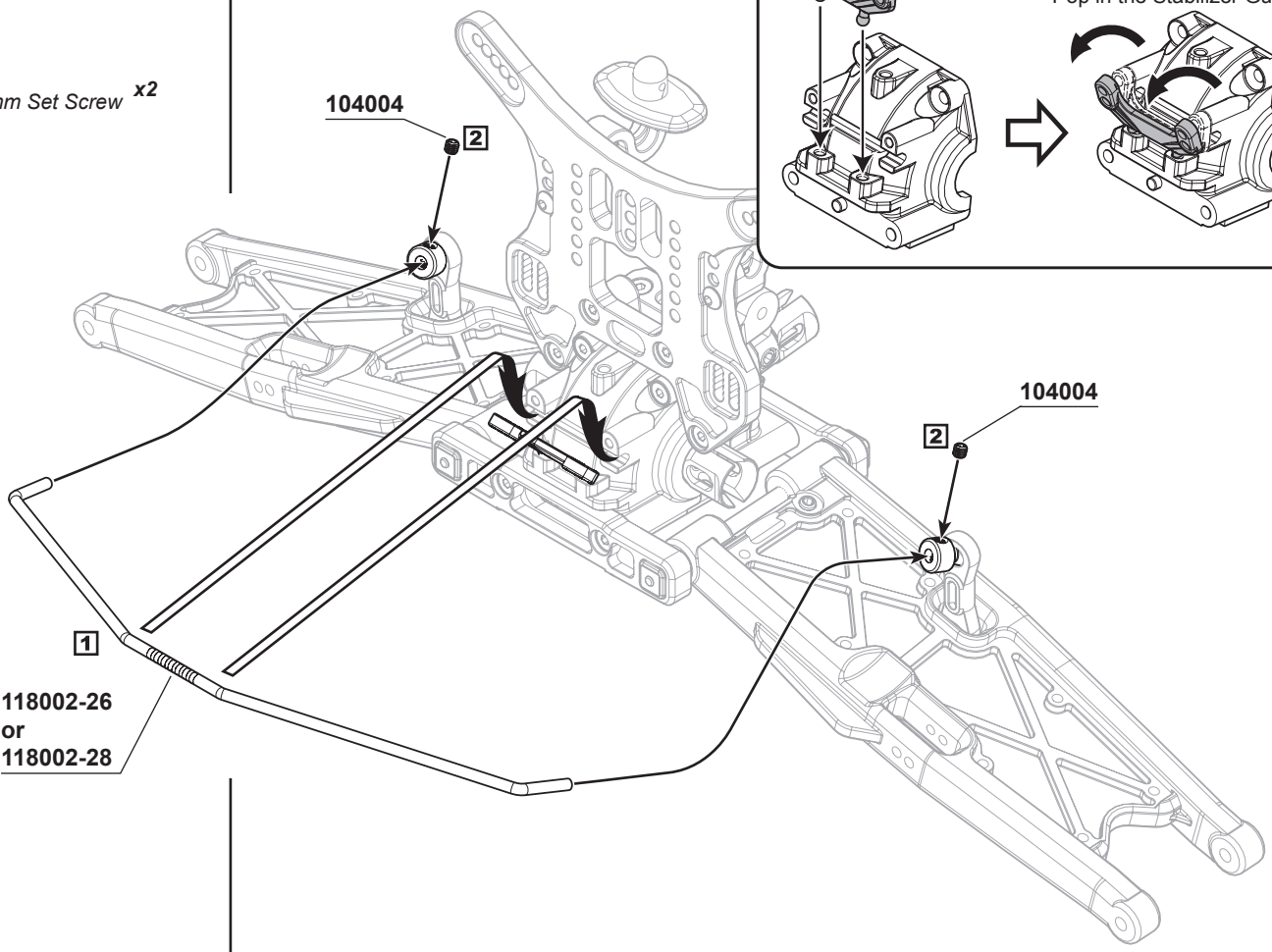

17

104005
M3x4mm Set Screw ***x2***

106013
M2.5x8mmH ex Socket OH/TPScrew ***x2***

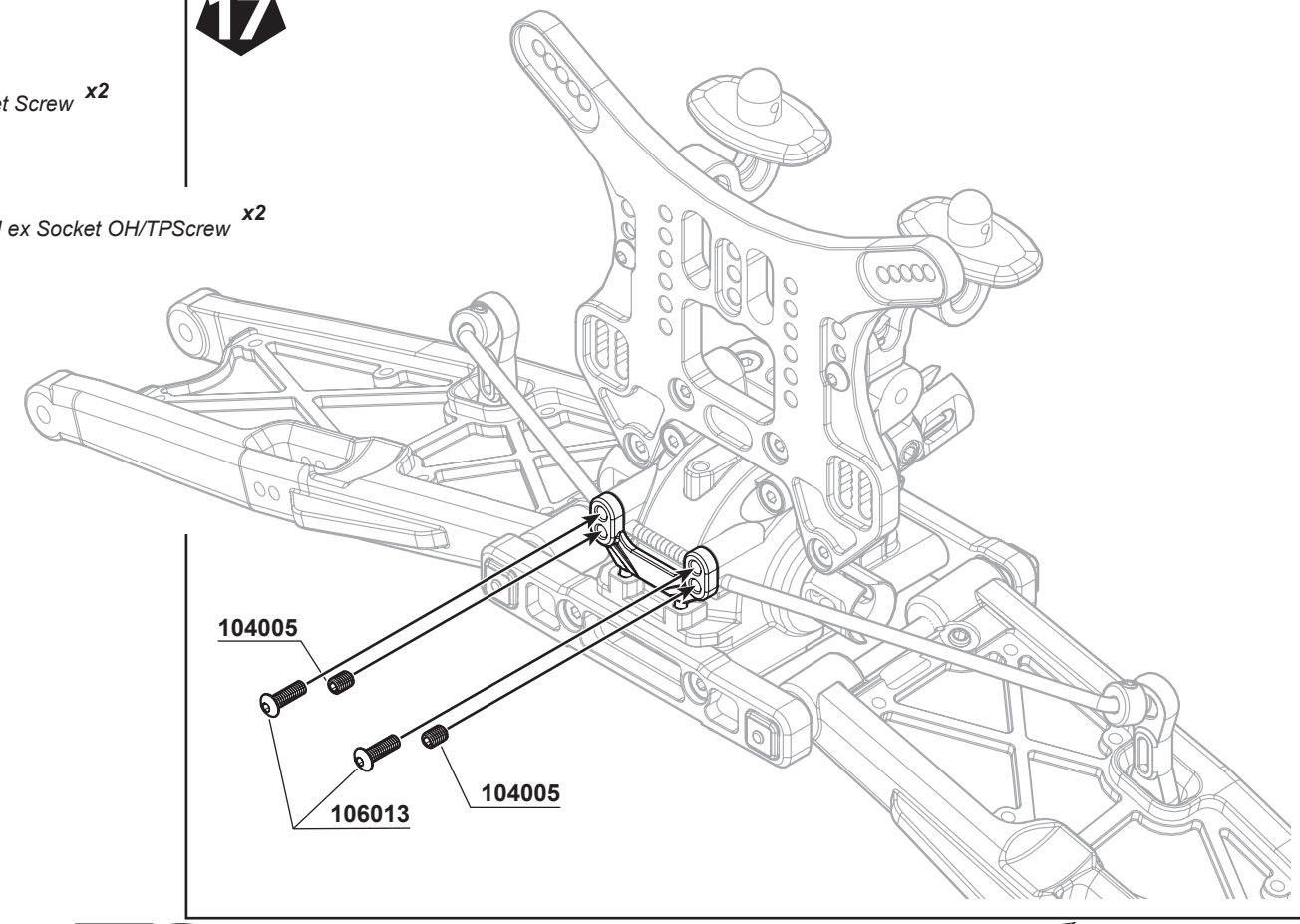

BAG E3

18 L R x2



106002
M3x10mm Hex Socket OH/TP Screw ***x4***

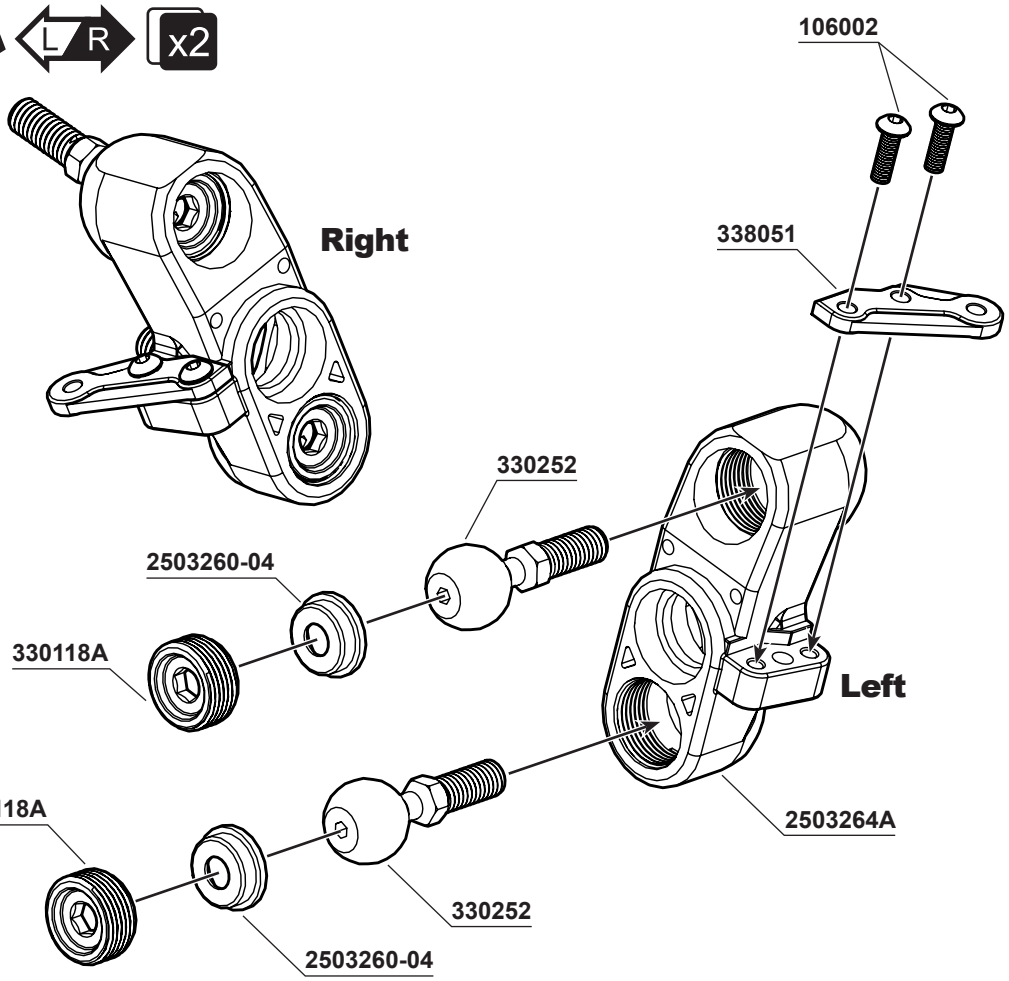

Screw and adjust 330118A Knuckle Pivot Ball Nut so as the pivot ball can be moved smoothly.

19 L R x2



116006R
Ball Bearing 8x16x5mm (Red Rubber Case) ***x4***

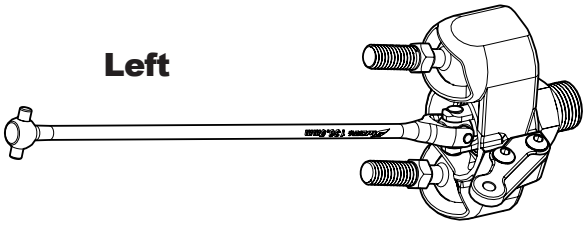

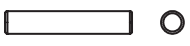

330124
Pin M3.0x16.8mm ***x2***

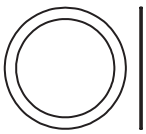

101018
SHIM 13x16x0.2mm ***x1***



104010
M5x4mm Set Screw (Flat Bottom) ***x2***

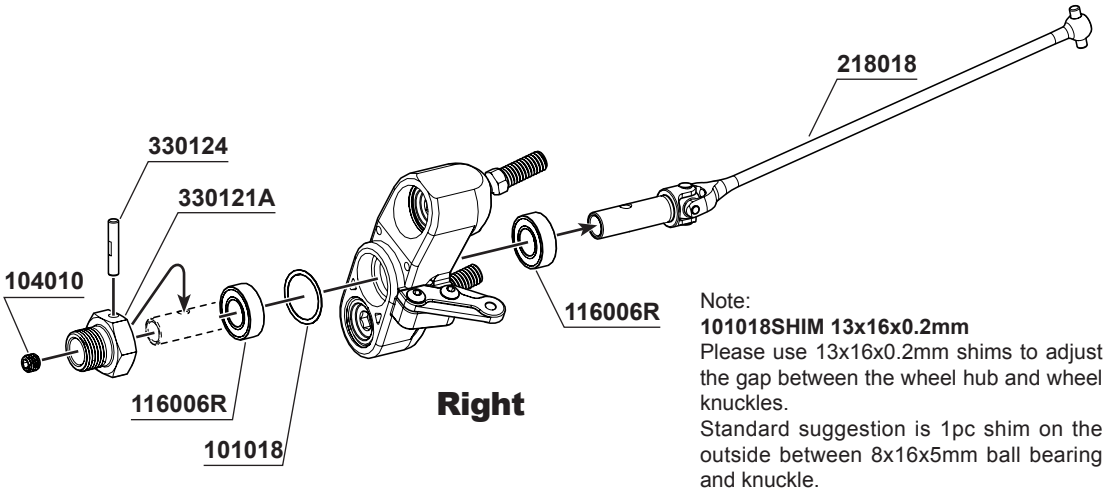

Note:
101018SHIM 13x16x0.2mm
Please use 13x16x0.2mm shims to adjust the gap between the wheel hub and wheel knuckles.
Standard suggestion is 1pc shim on the outside between 8x16x5mm ball bearing and knuckle.
If the wheel hub still has big play with knuckle, please try to put another shim in another side between ball bearing and knuckle.

BAG E3 20 L R x2

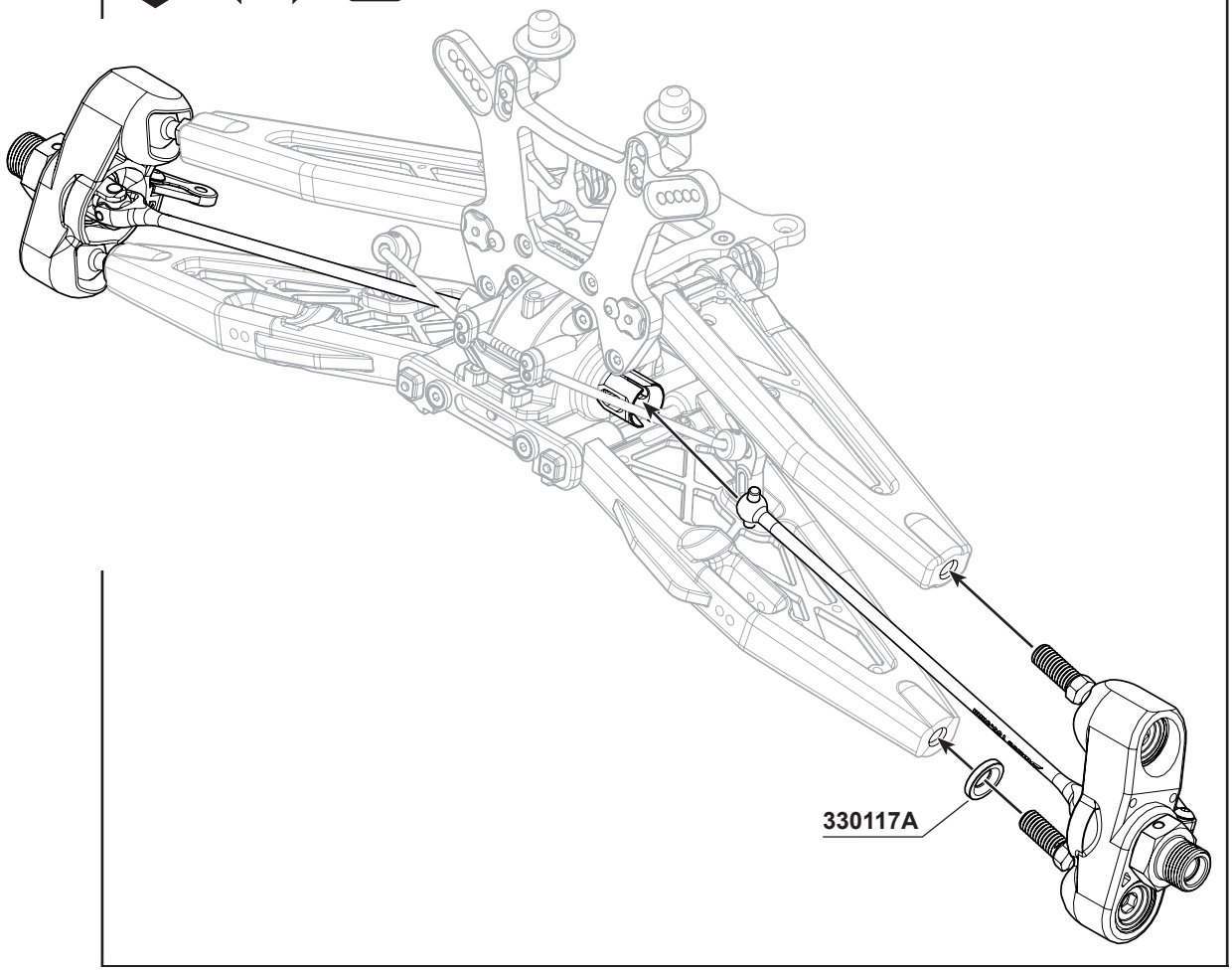

BAG E2 21

103001
M3 Nut Lock **x2**

101021
M3x8xT1mm **x2**

117003
Flange Ball Bearing 3x6x2.5mm **x4**

106007
M3x12mm Hex Socket OH/TP Screw(HT) **x2**

116004R
Ball Bearing 6x10x3mm (Red Rubber Case) **x2**

106014
M2x6mm Hex Socket OH/TP Screw **x1**

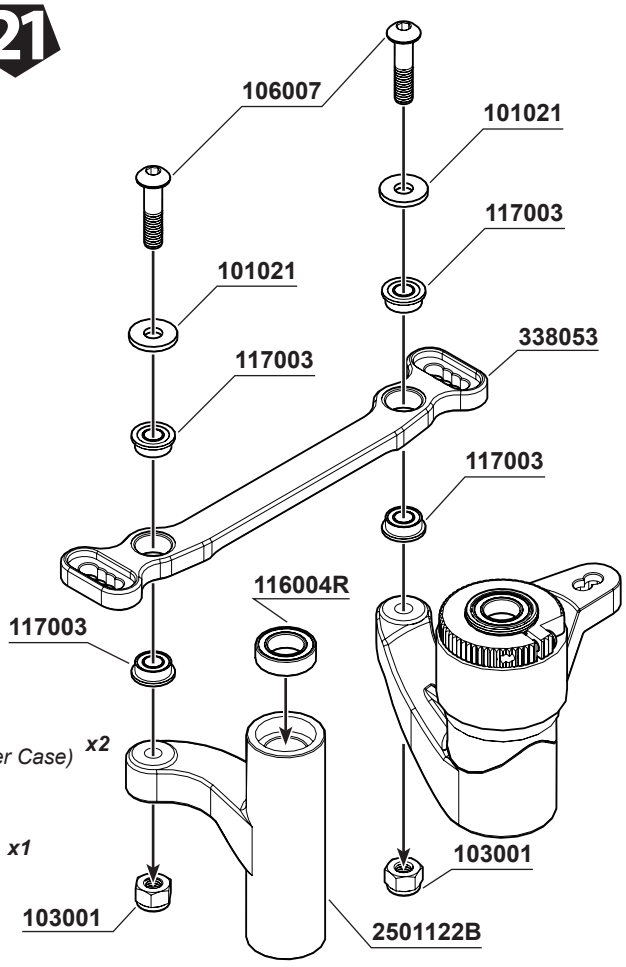

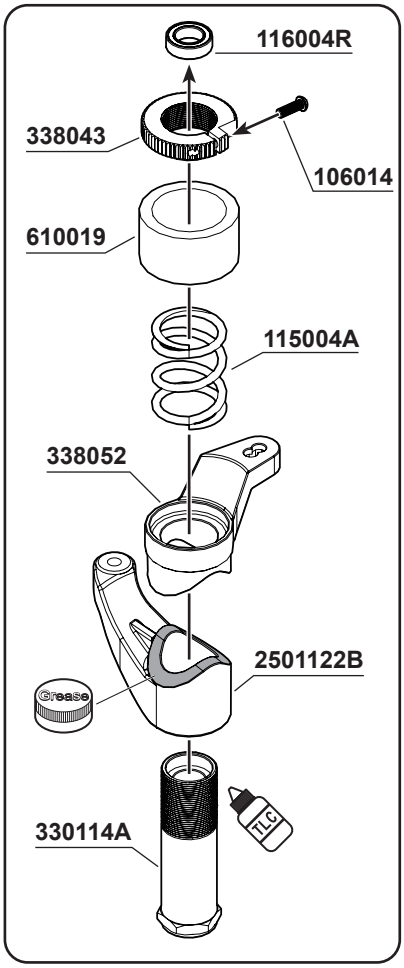

BAG E2 22



108003
M3x10mm FH/ST HEX Screw ***x2***



116004R
Ball Bearing 6x10x3mm (Red Rubber Case) ***x2***



101019
SHIM 6.0x10.0x0.2mm ***x1***

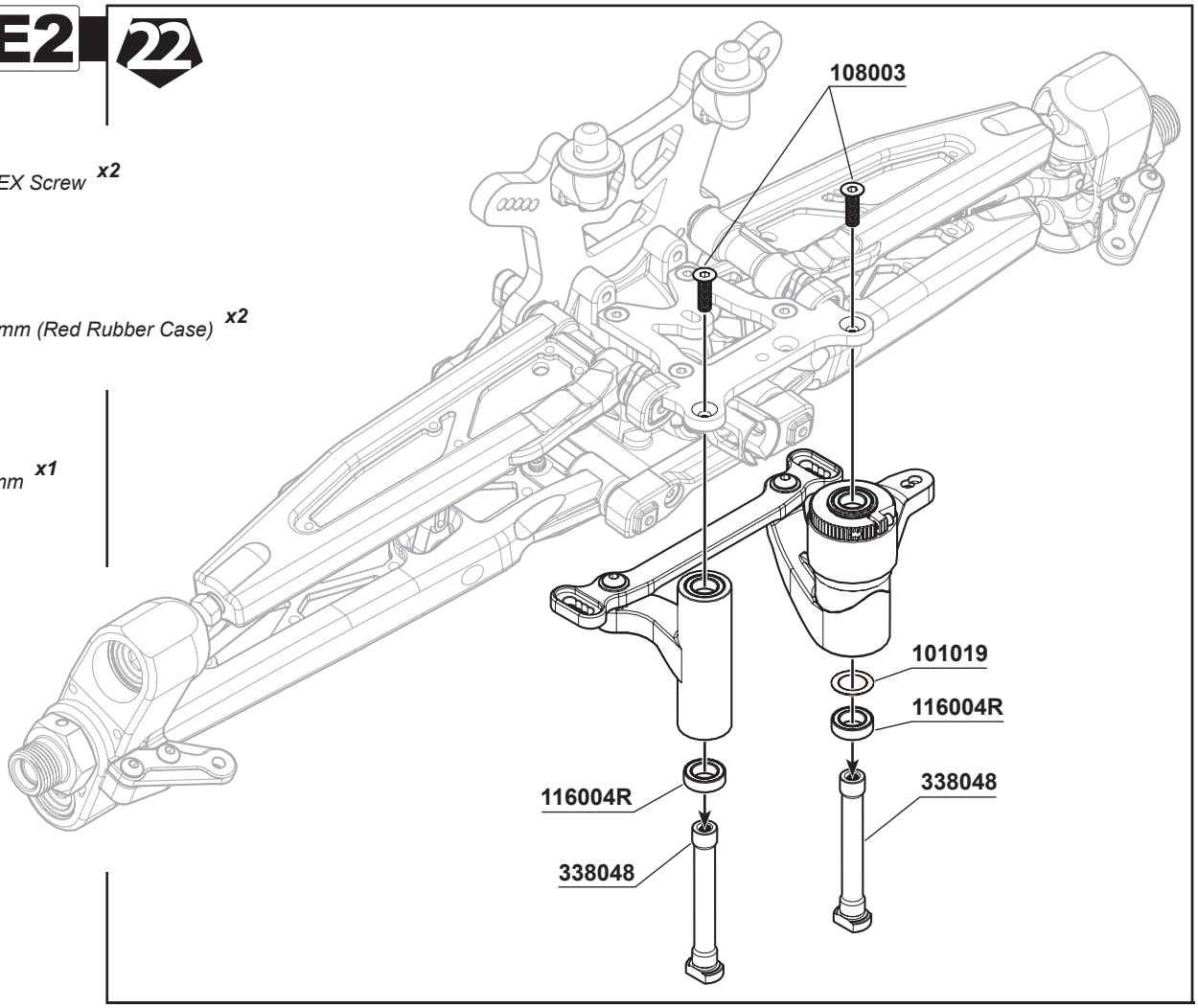

BAG E3 23 1 2 3 L R x2



103001
M3 Nut Lock ***x4***



104010
M5x4mm Set Screw (Flat Bottom) ***x2***

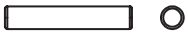

330124
Pin M3.0x16.8mm ***x2***



106009
M3x25mm Hex Socket OH/TP Screw ***x4***

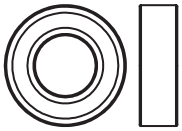

116006R
Ball Bearing 8x16x5mm (Red Rubber Case) ***x4***

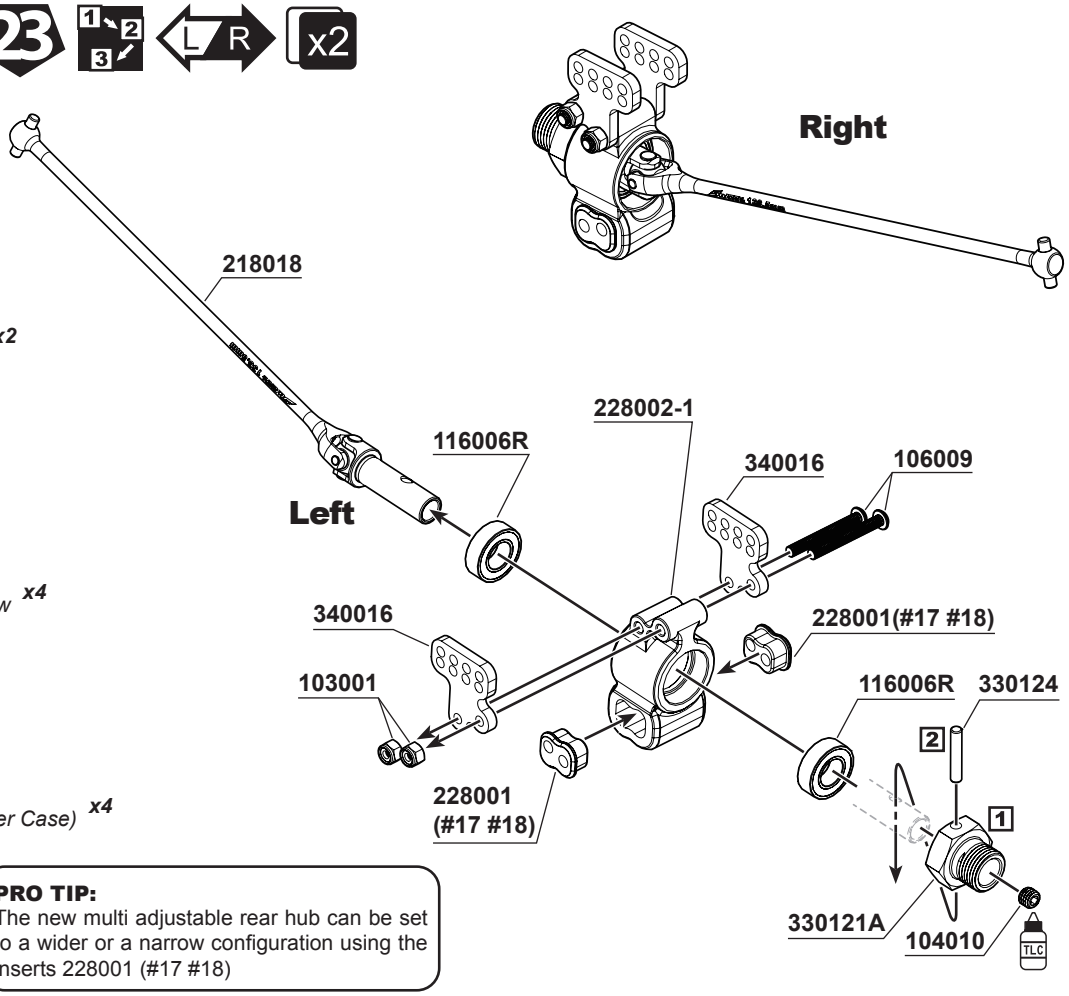

PRO TIP:
The new multi adjustable rear hub can be set to a wider or a narrow configuration using the inserts 228001 (#17 #18)

BAG E3

24

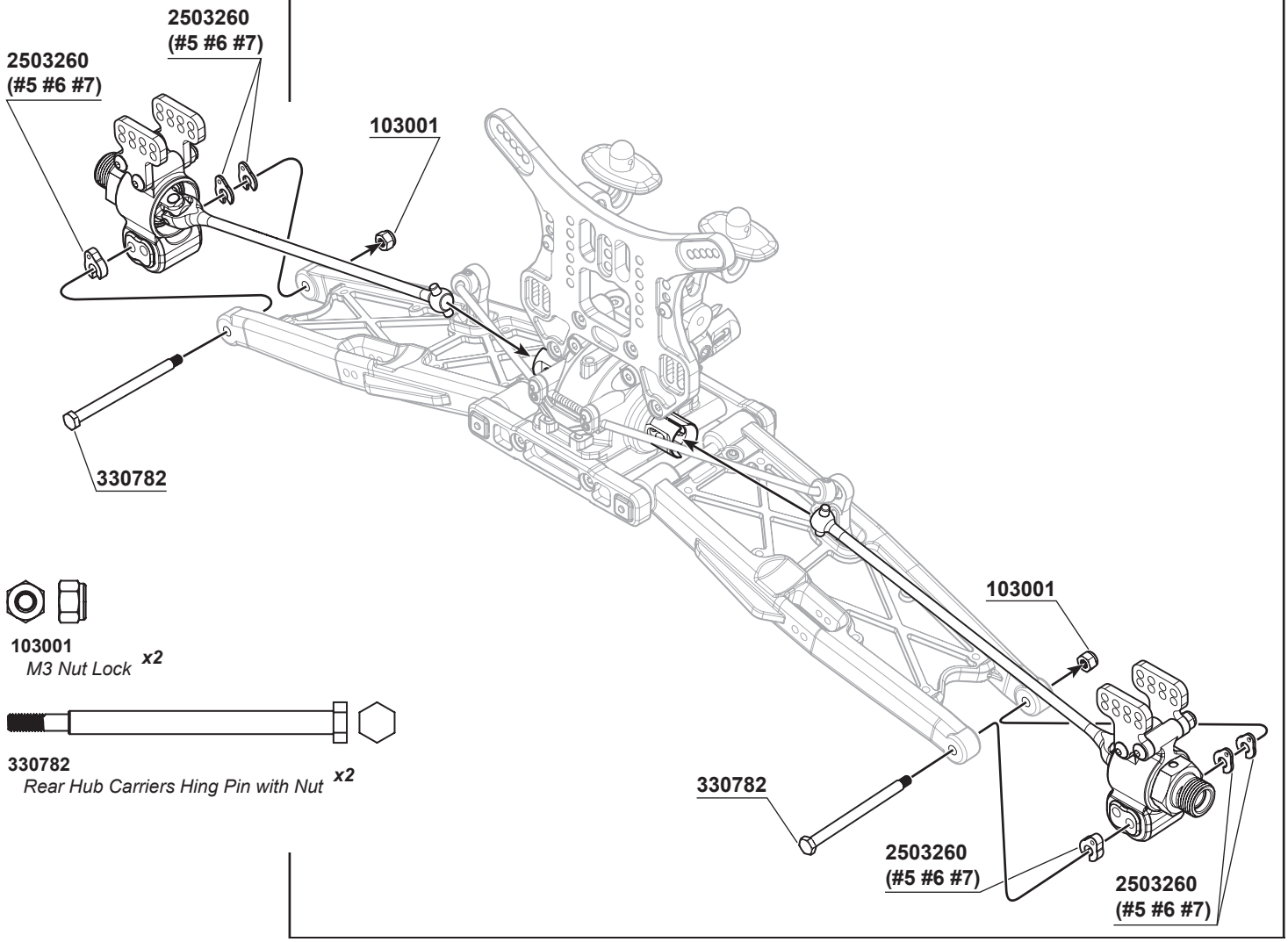

103001
M3 Nut Lock ***x2***

330782
Rear Hub Carriers Hing Pin with Nut ***x2***

25 L R x2

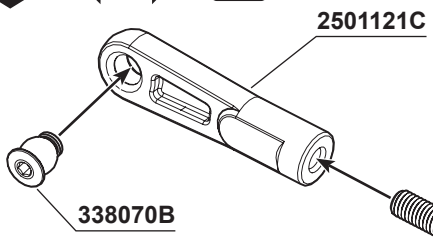

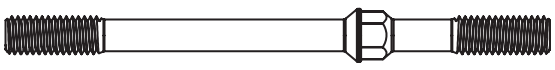

330458
S350T Rear Upper Arm Turnbuckle M5x72mm ***x2***

1:1

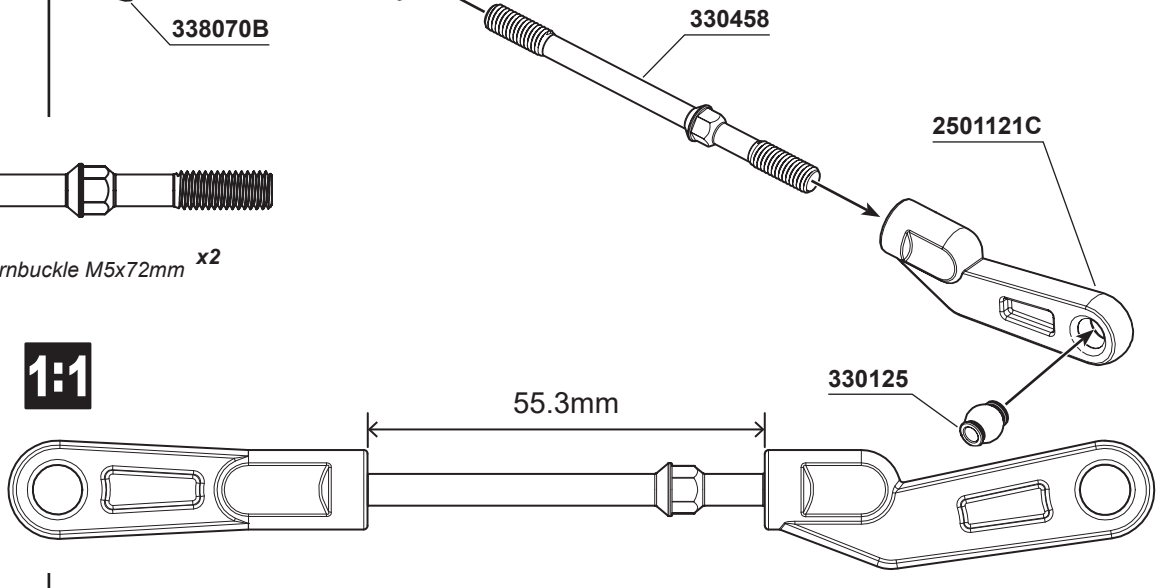

BAG E3

26 L R x2

106002
M3x10mm Hex Socket OH/TP Screw **x2**

106009
M3x25mm Hex Socket OH/TP Screw **x2**

103001
M3 Nut Lock **x2**

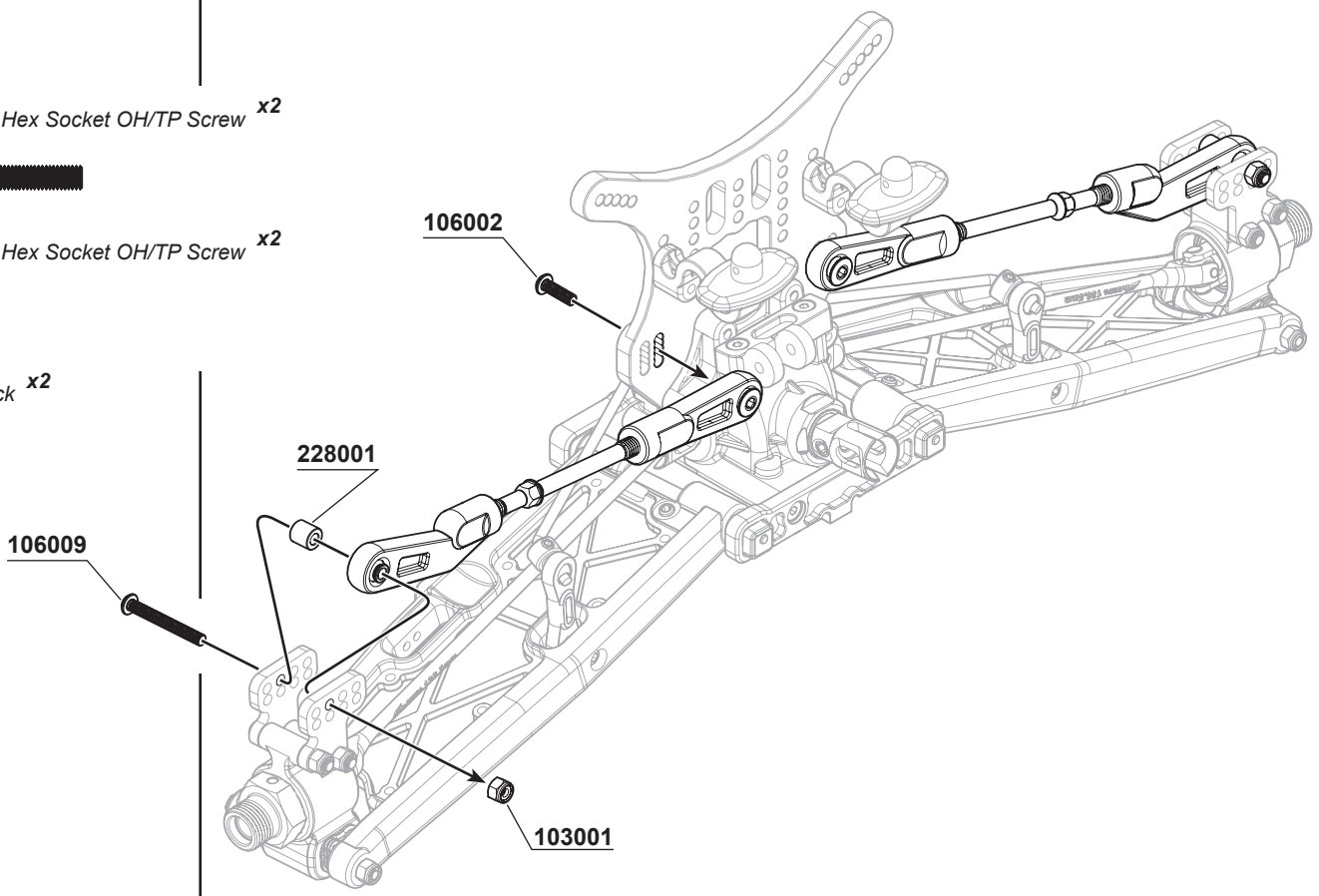

27

103001
M3 Nut Lock **x6**

106003
M3x16mm Hex Socket OH/TP Screw **x4**

108019
M2.6x6mm Flat Head Screw - Hex Socket **x2**

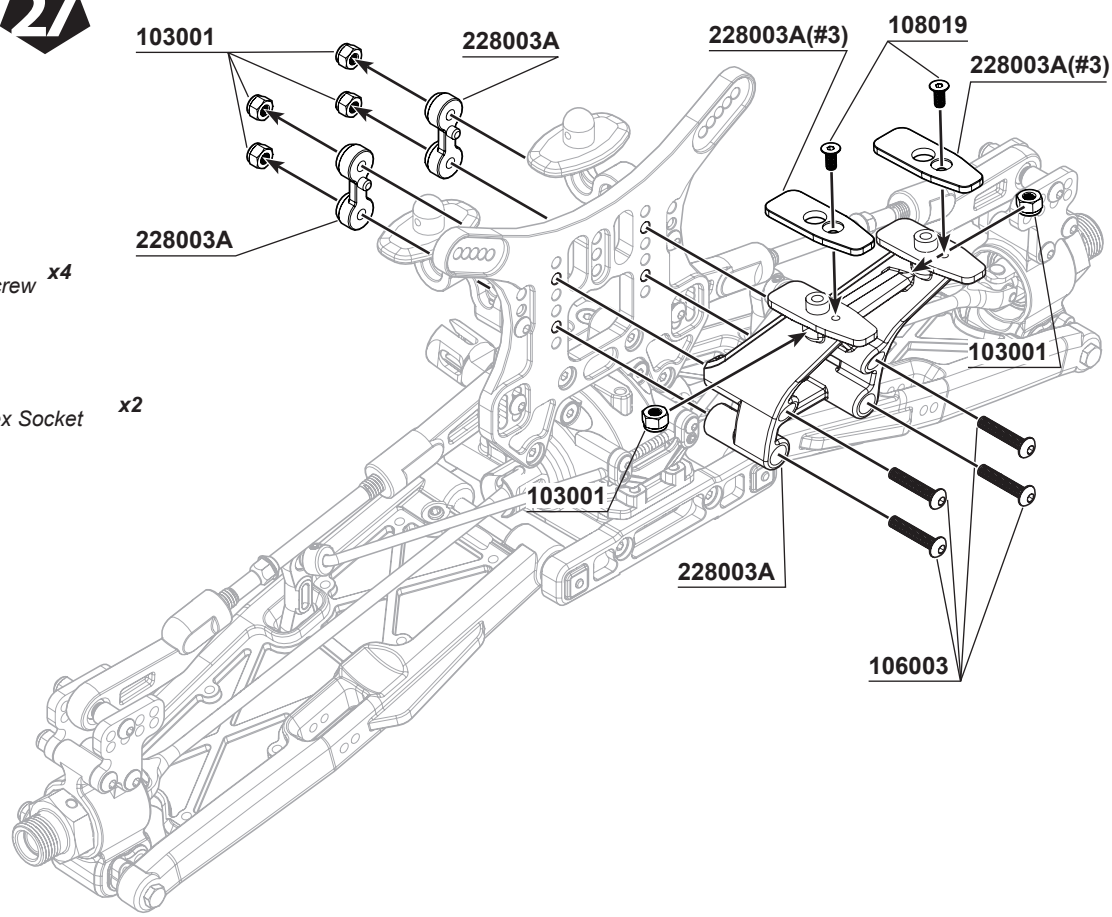

BAG F

28

106007
M3x12mm Hex Socket OH/TP Screw(HT) x4

104004
M3x3mm Set Screw x2

108006
M3x8mm FH/ST HEX Screw x4

116009
Ball Bearing M5x8x2.5mm x2

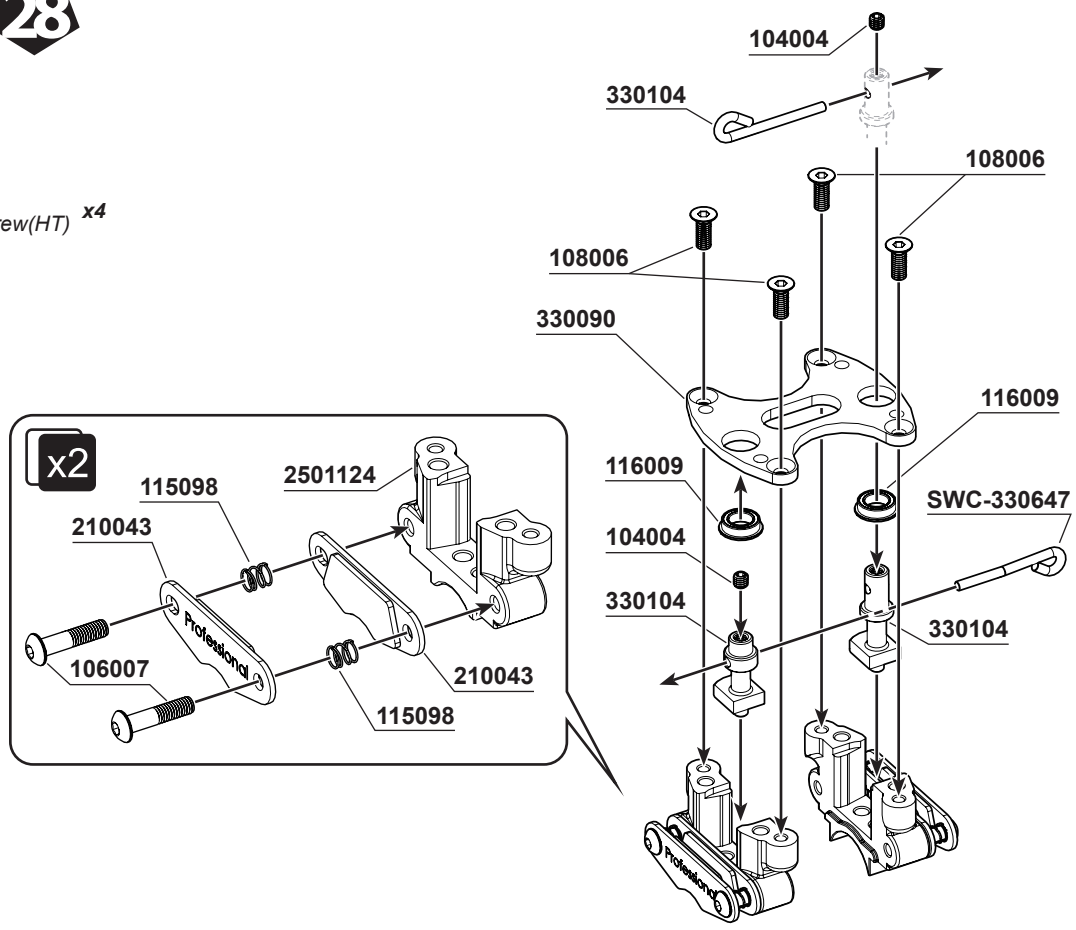

29

106009
M3x25mm Hex Socket OH/TP Screw x4

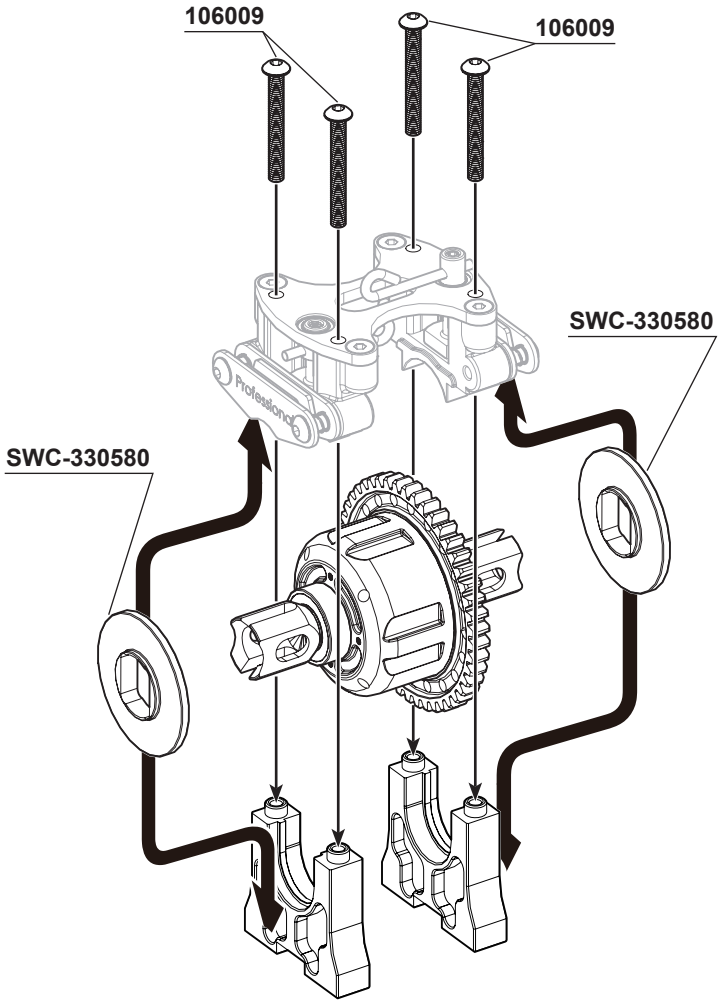

BAG F

30



108007
M3x6mm FH/ST HEX Screw ***x10***

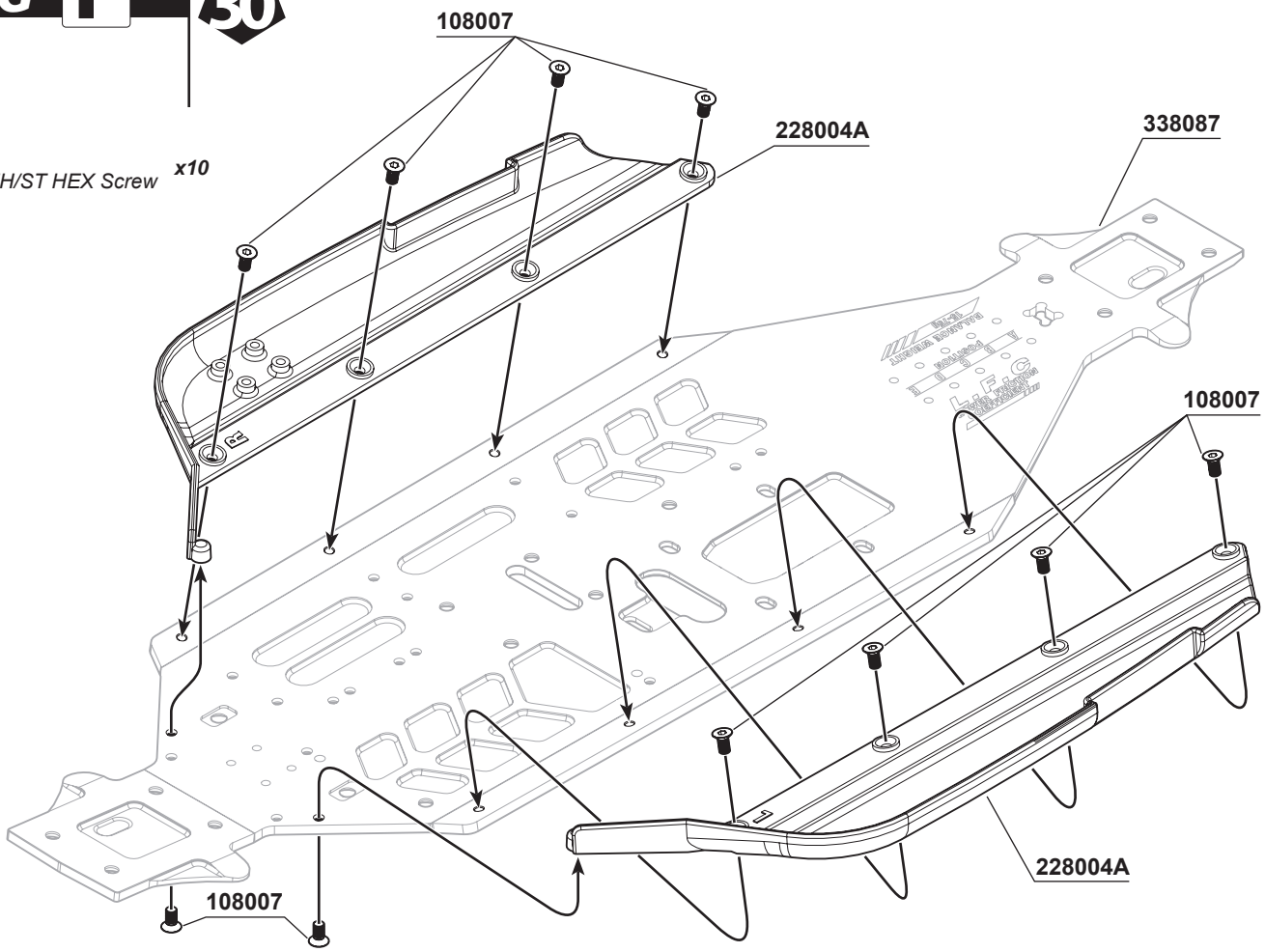

31



108003
M3x10mm FH/ST HEX Screw ***x2***



108010
M4x10mm FH/ST HEX Screw ***x2***



108012
M4x16mm FH/ST HEX Screw ***x4***

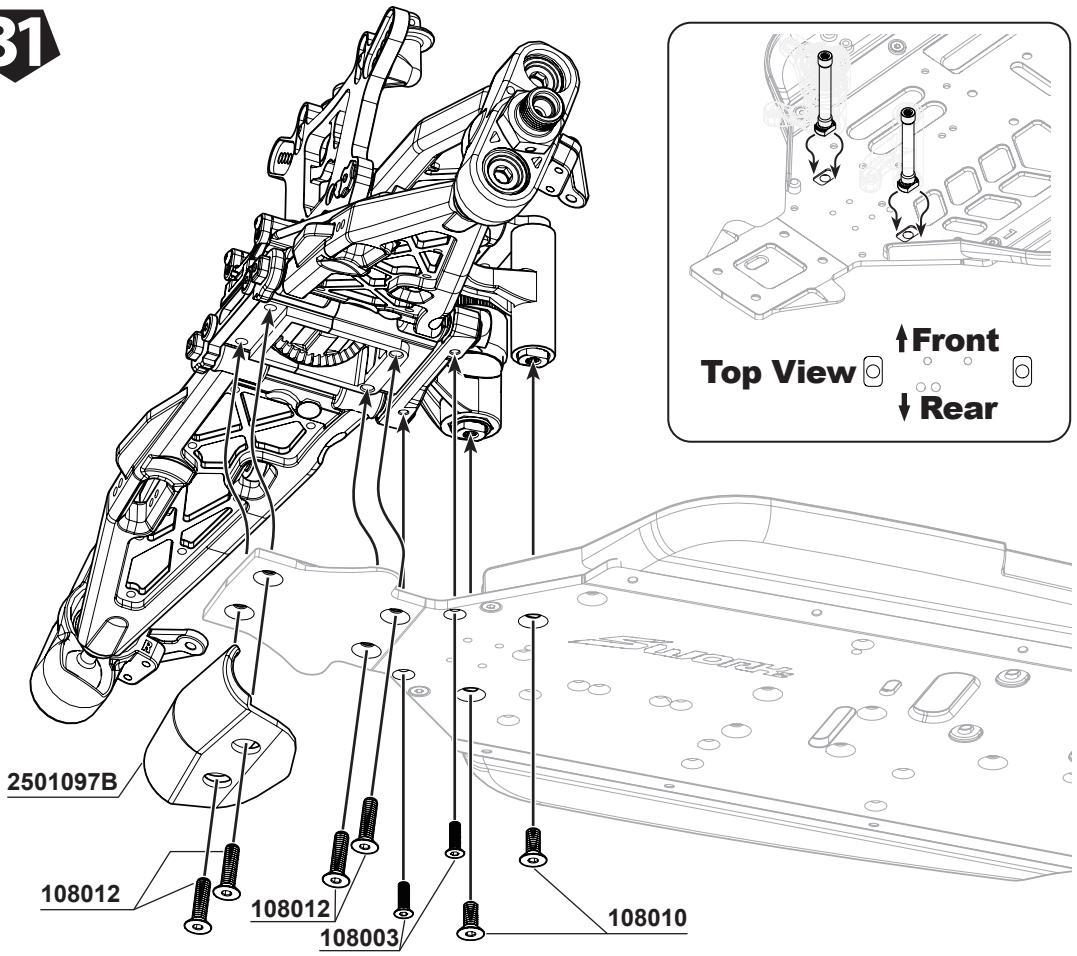

BAG F

32



108003
M3x10mm FH/ST HEX Screw ***x3***



108010
M4x10mm FH/ST HEX Screw ***x4***

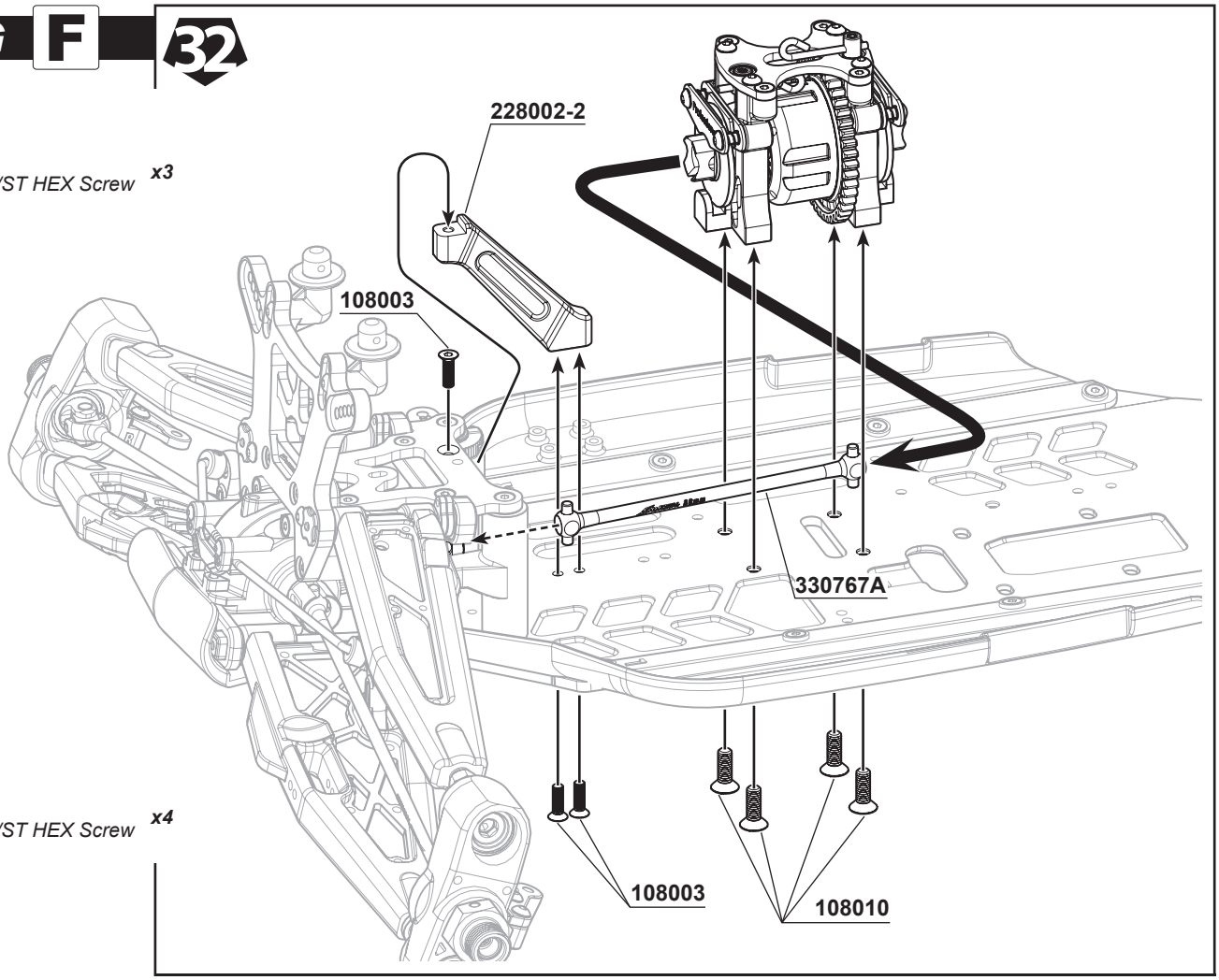

33

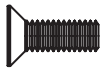

108011
M4x12mm FH/ST HEX Screw ***x1***



108012
M4x16mm FH/ST HEX Screw ***x4***



106006
M3x20mm Hex Socket OH/TP Screw ***x1***



103001
M3 Nut Lock ***x1***



103005
M4mm Nut Lock (BK) ***x1***

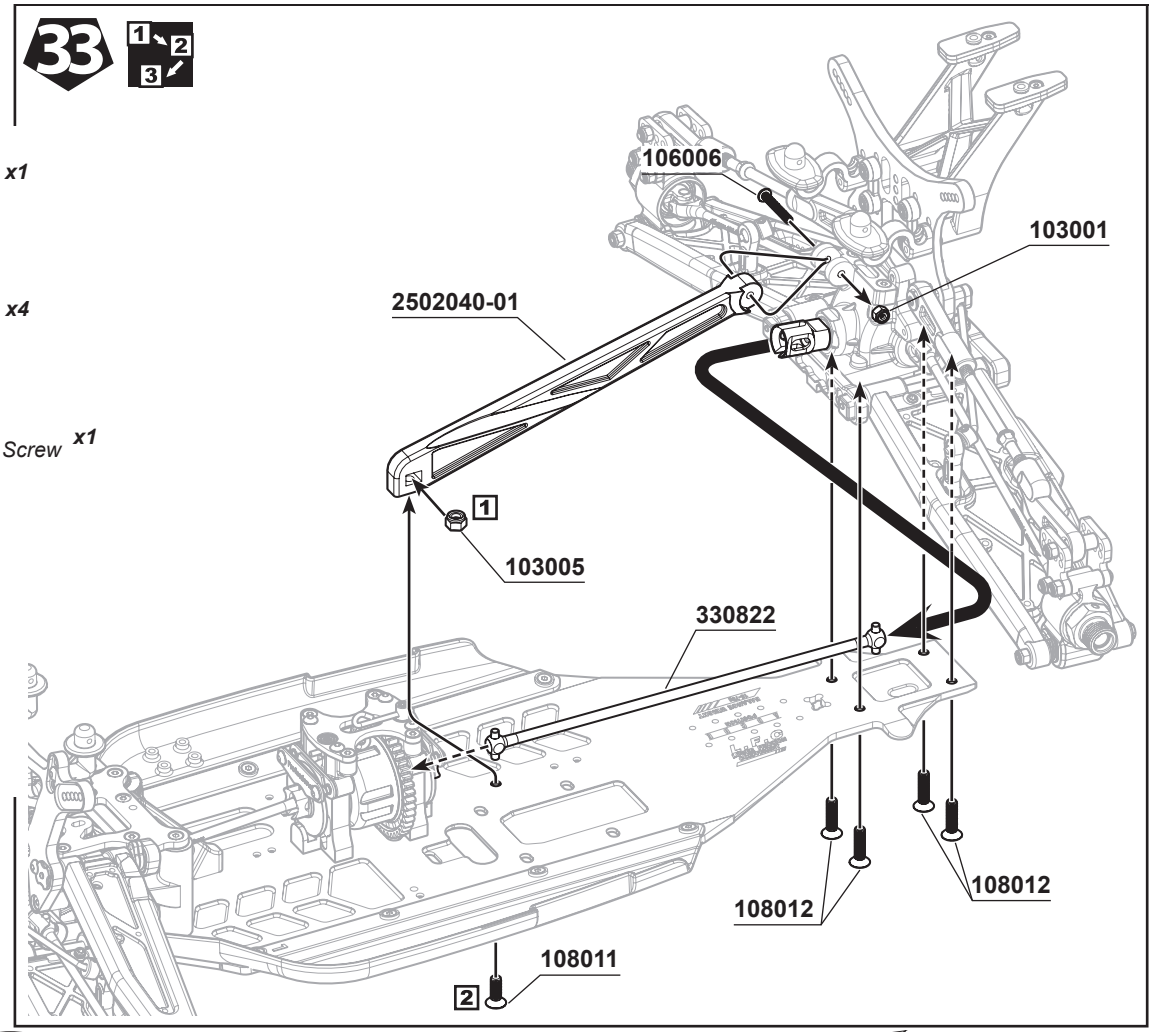

34 L R x2

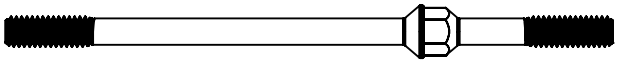

338089
Steering Linkage Turnbuckle M4x80mm ***x2***

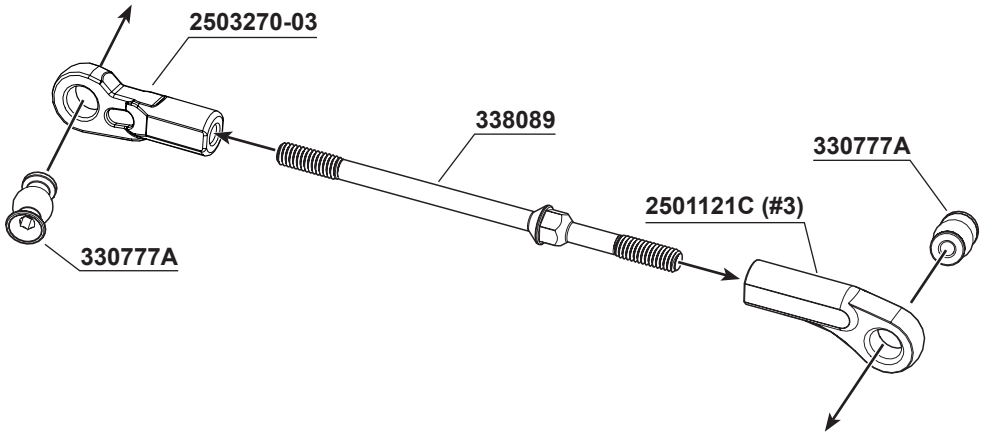

1:1

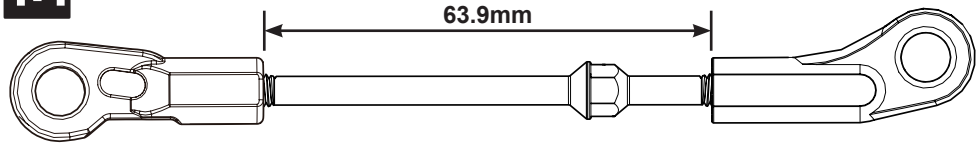

35 L R x2



106002
M3x10mm Hex Socket OH/TP Screw ***x4***

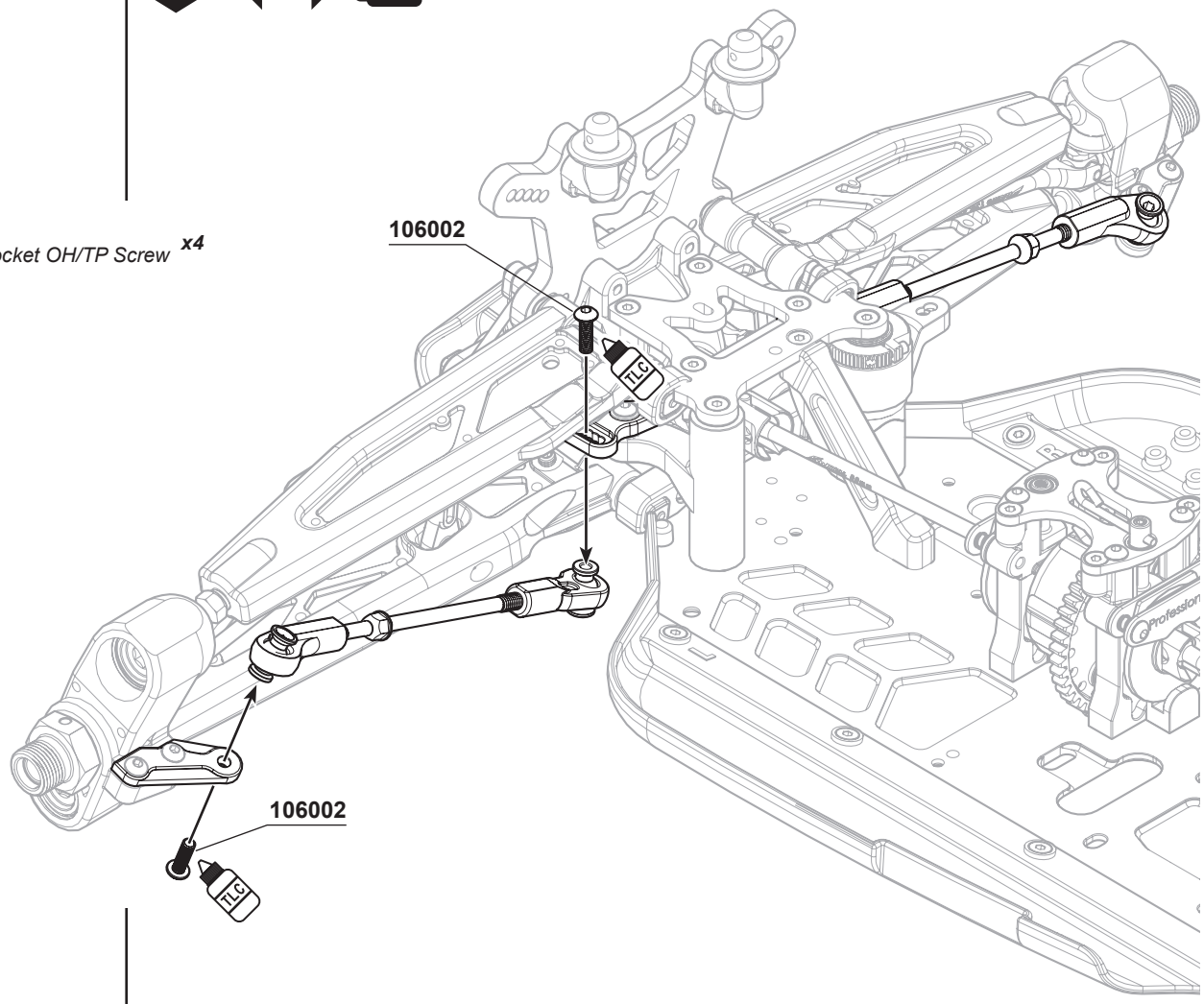

BAG G

106008
M3x12mm Hex Soket OH/TP Screw ***x4***

106003
M3x16mm Hex Socket OH/TP Screw ***X4***

36

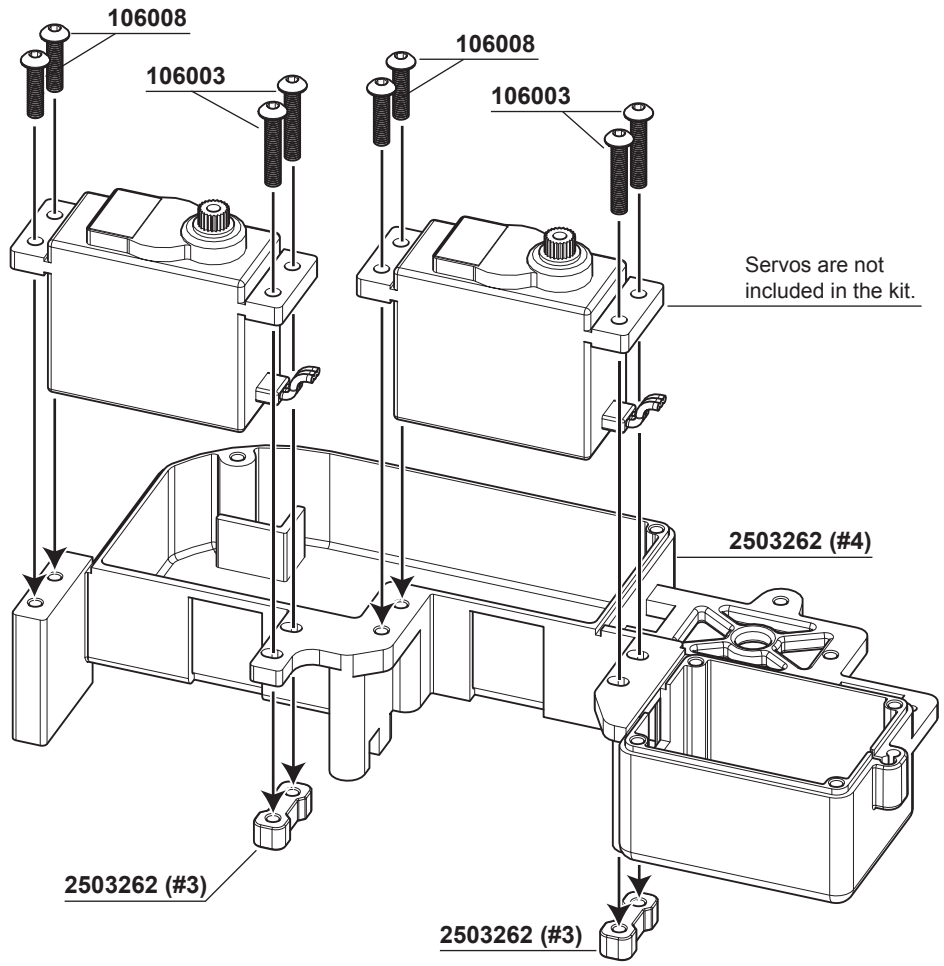

103001
M3 Nut Lock ***x2***

106002
M3x10mm Hex Socket OH/TP Screw ***x3***

37

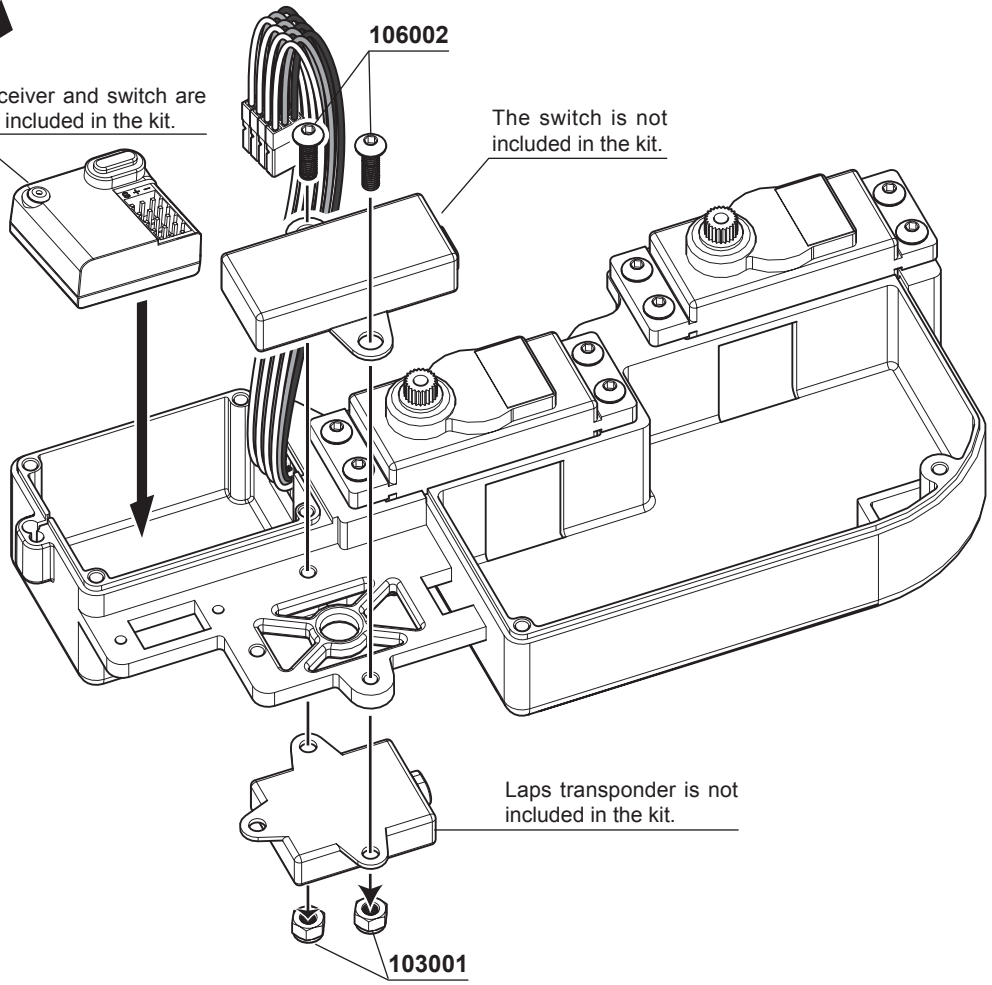

38

108006
M3x8mm FH/ST HEX Screw ***x4***

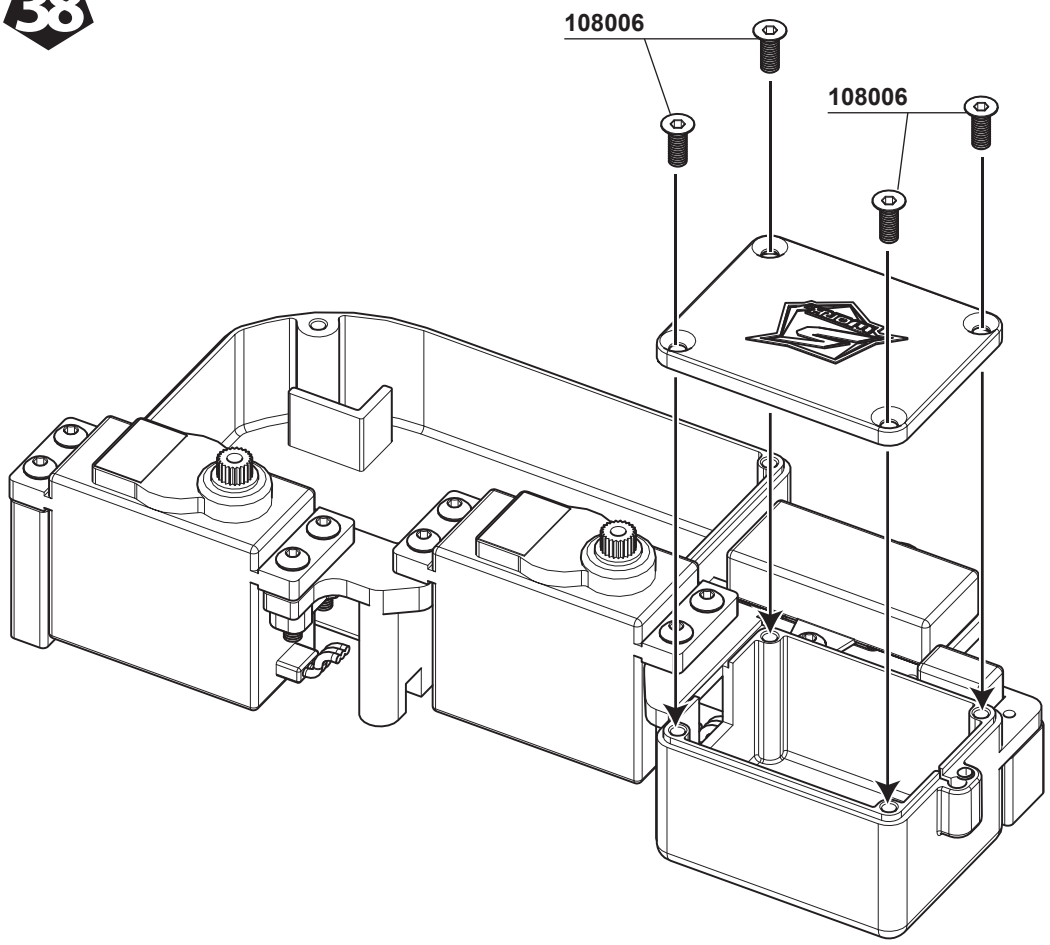

39

104004
M3x3mm Set Screw ***x1***

106001
M3x8mm Hex Socket OH/TP Screw ***x3***

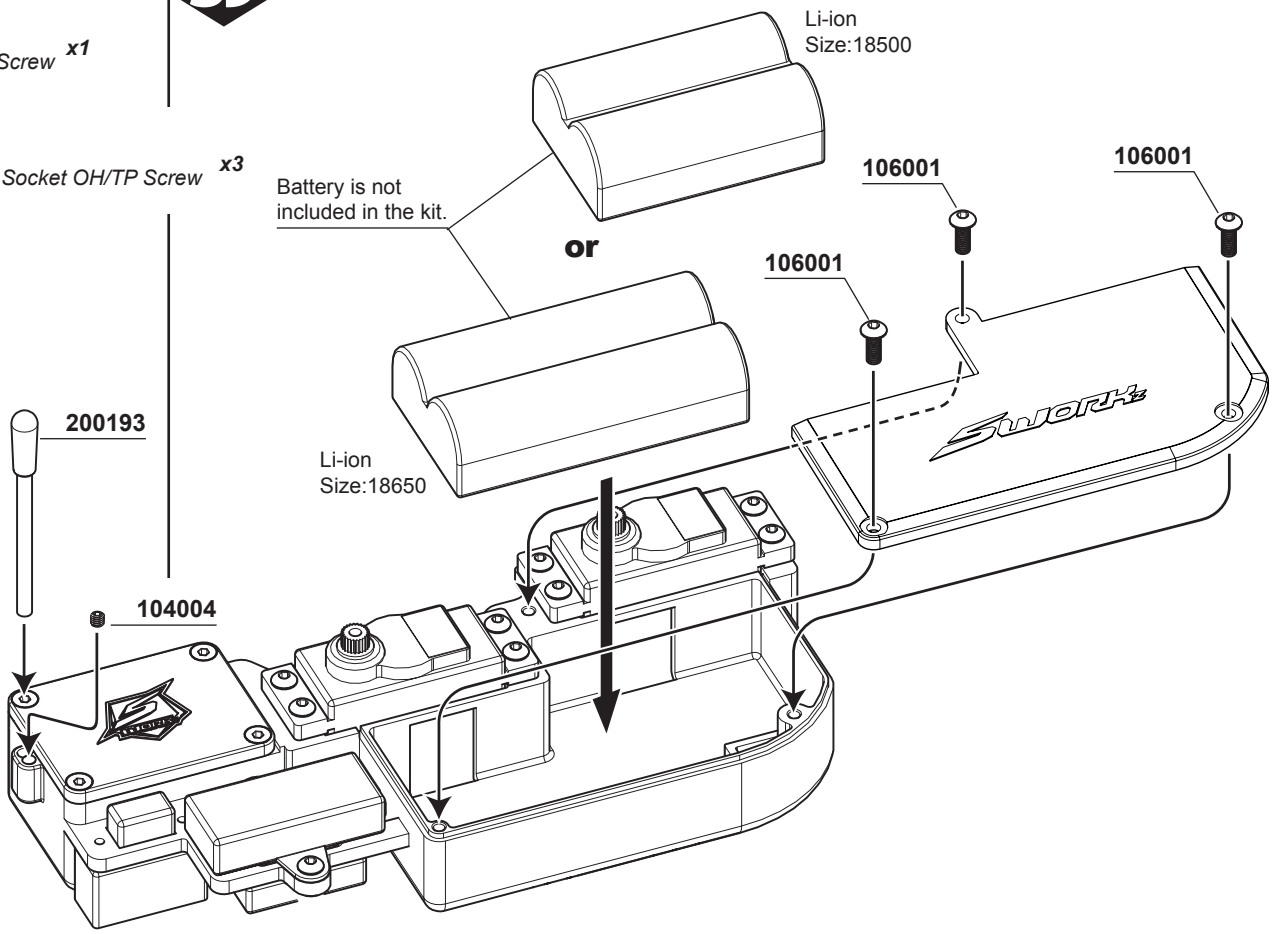

40

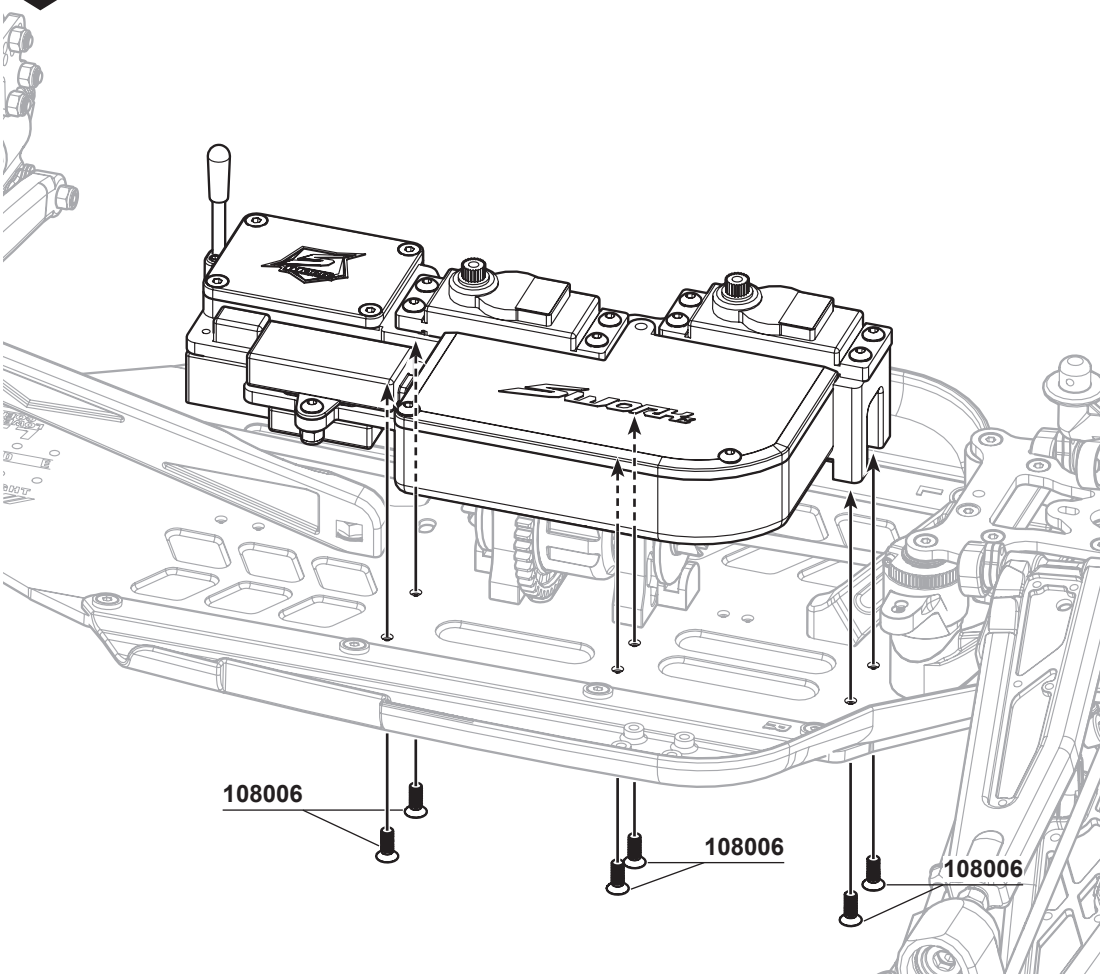

108006
M3x8mm FH/ST HEX Screw ***x6***

41

OPTION:
SW-338078-25 SWORKz Uni-Design 2-Way System Aluminum Steering Servo Horn 25T
SW-338078-23 SWORKz Uni-Design 2-Way System Aluminum Steering Servo Horn 23T

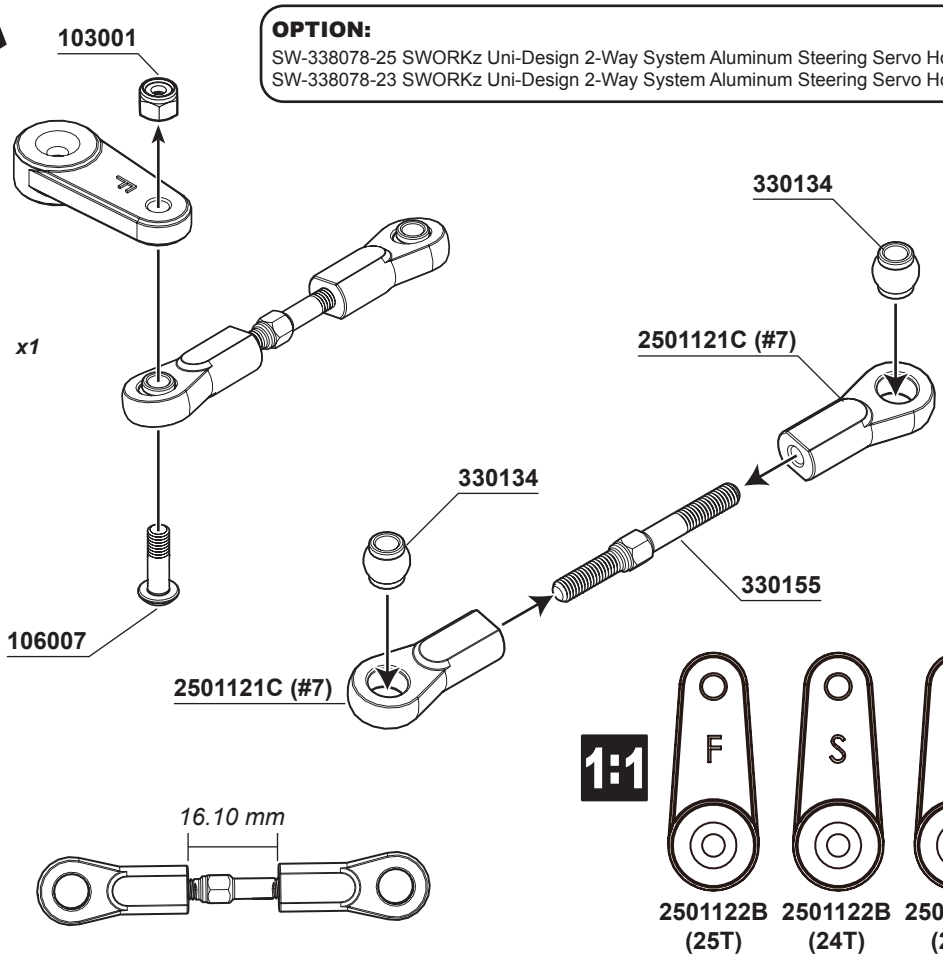

106007
M3x12mm Hex Socket OH/TP Screw (HT) ***x1***

330155
Steering Servo Turnbuckle (M3x30mm) ***x1***

103001
M3 Nut Lock ***x1***

2501122B (25T) **2501122B (24T)** **2501124B (23T)**

BAG G

108006
M3x8mm FH/ST HEX Screw ***x1***

106007
M3x12mm Hex Socket OH/TP Screw (HT) ***x1***

103001
M3 Nut Lock ***x1***

42

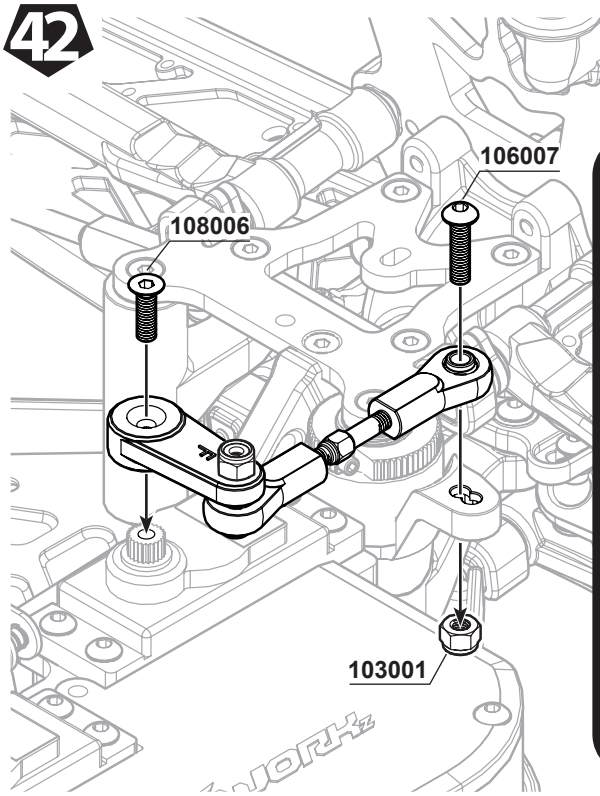

SW-338052
S35-4 Series T7 Aluminum Settring Bellcrank Upper Part-A (with 2Hole)

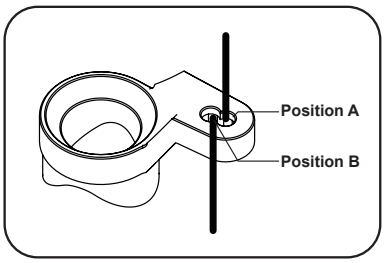

If servo saver arms are not included use this:

Position A: Standard steering response location. Use of a 2.5mm longer servo saver arm is required.

If servo saver arms are included use this:

Position A: Standard steering response location. Use of the included 2.5mm longer servo saver arm is required.

Position B: Quick steering response location. Standard servo saver arm can be used.

BAG H

108006
M3x8mm FH/ST HEX Screw ***x2***

106020
M2.5x5mm Hex Socket OH/TP Screw ***x3***

106002
M3x10mm Hex Socket OH/TP Screw ***x3***

43

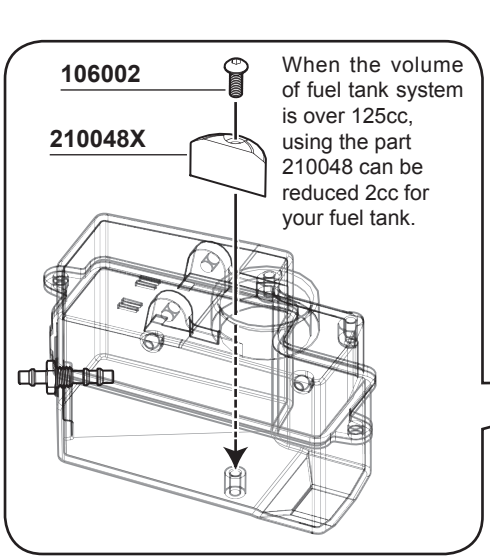

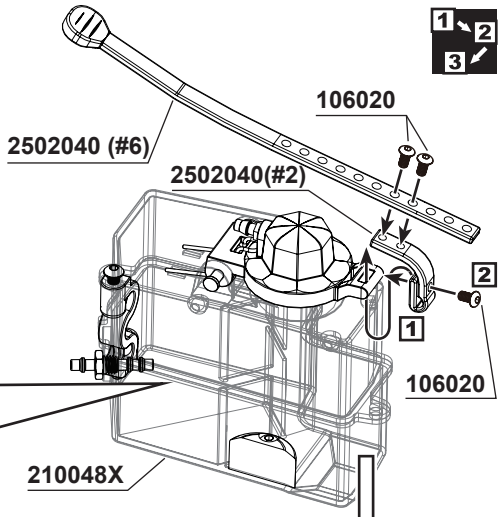

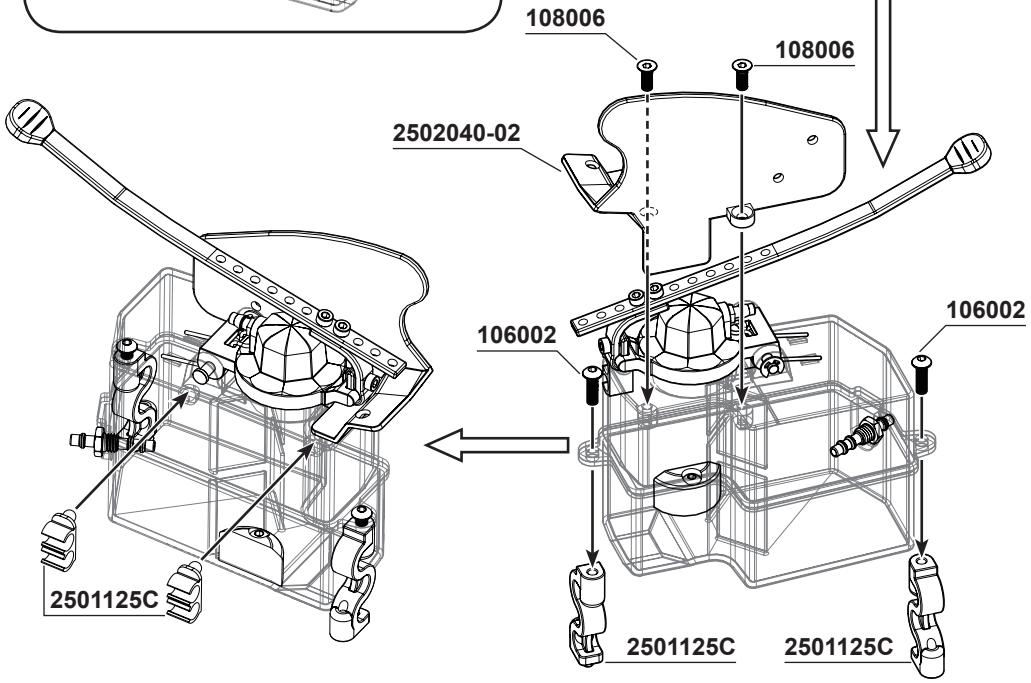

BAG H

44



108003
M3x10mm FH/ST HEX Screw ***x2***

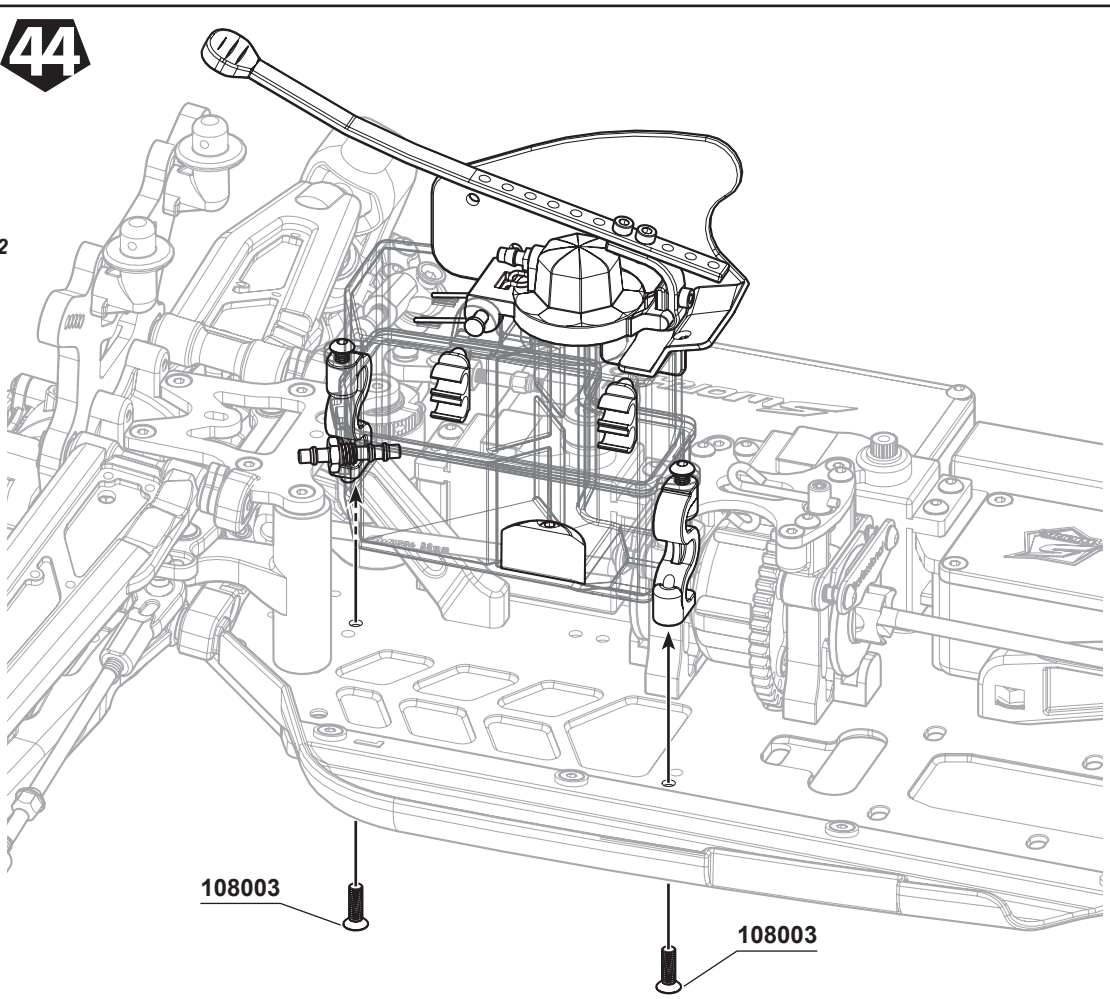

BAG I

45



105005
M3x12mm Cap Screw ***x4***



101013
3mm Spring Washer ***x4***

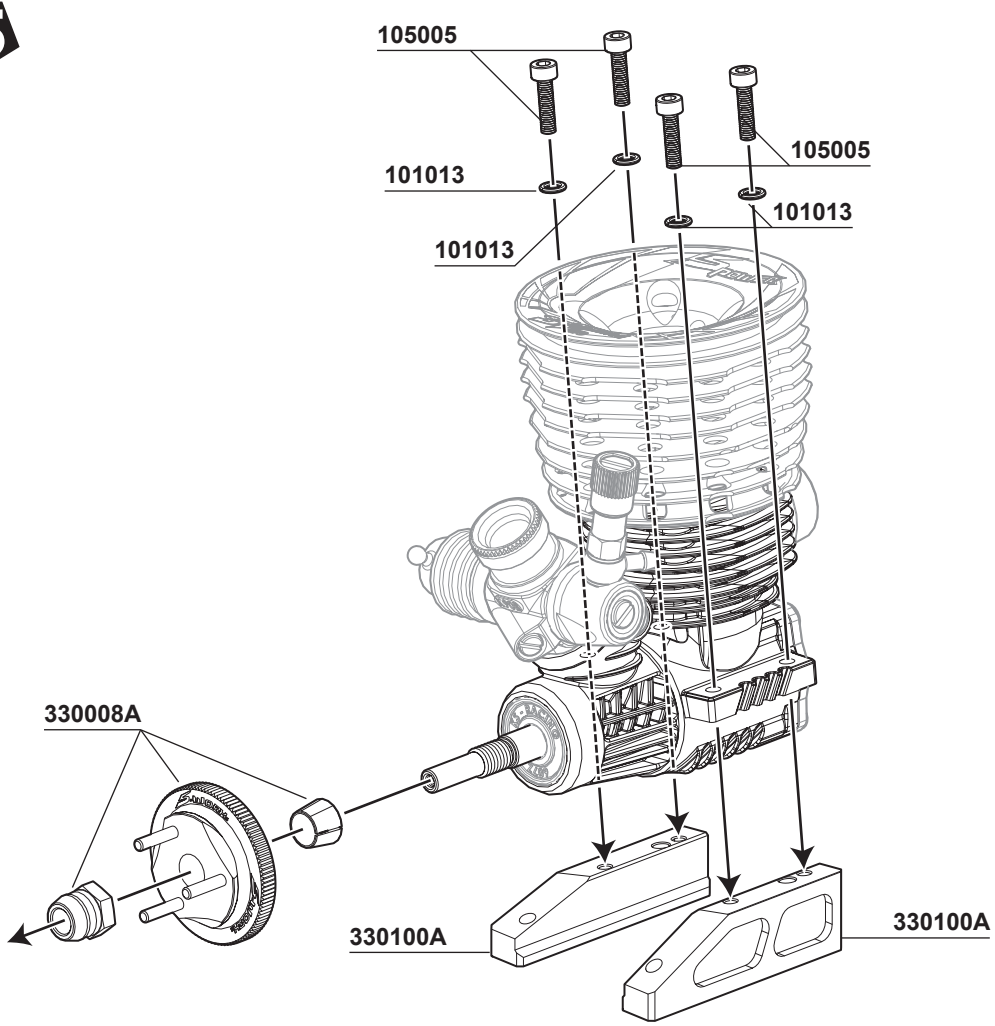

BAG I

105001
M3x8mm Cap Screw ***x1***

101021
M3x8xT0.8mm ***x1***

101015
M5x8xT0.4mm ***x2***

101016
M5x8xT0.8mm ***x3***

105007A
M4x8mm I-Head Screw ***x4***

104011
M4x4mm Set Screw (Flat Bottom) ***x2***

108013
M4x8mm FH/ST HEX Screw ***x1***

46

116010R
Ball Bearing 5x10x4mm (Red Rubber Case) ***x2***

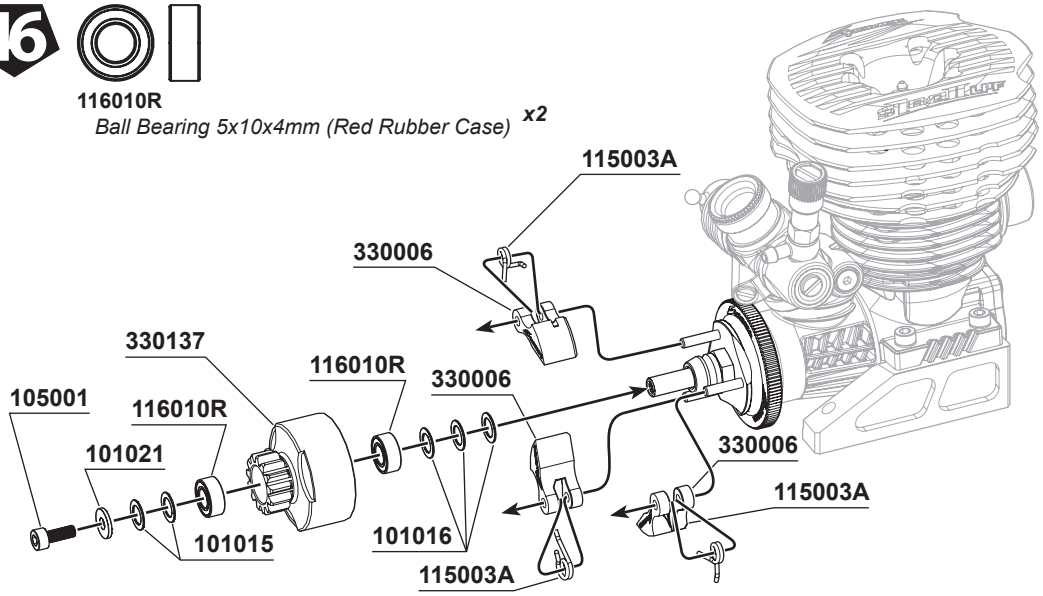

47

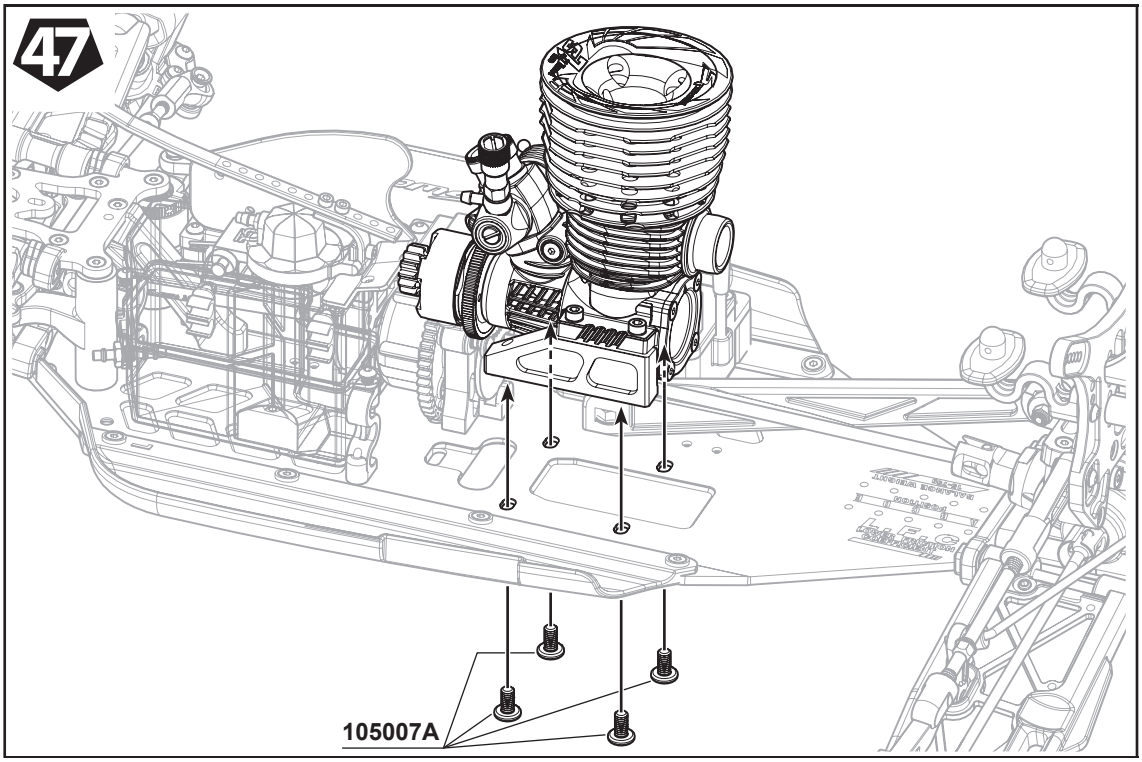

44

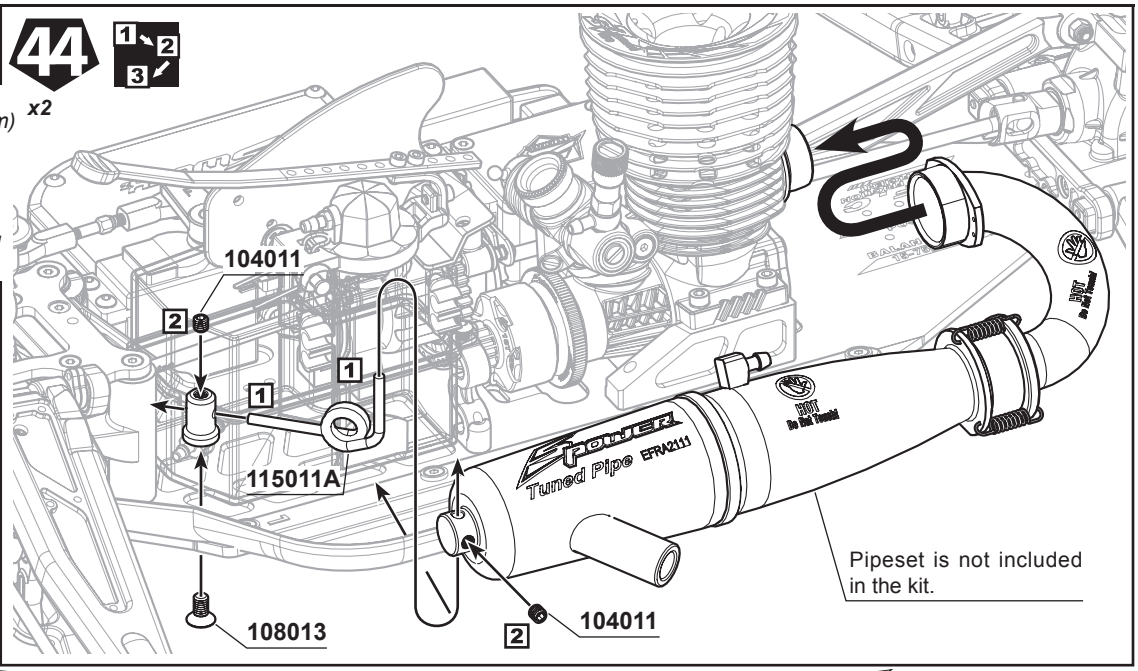

BAG J

104004
M3x3mm Set Screw ***x6***

106007
M3x12mm Hex Socket OH/TP Screw(HT) ***x1***

210018
Throttle Rod 50mm ***x1***

210018
Throttle Rod 60mm ***x2***

330157A
Brake Adjuster Knob ***x2***

106020
M2.5x5mm Hex Socket OH/TP Screw ***x3***

108006
M3x8mm FH/ST HEX Screw ***x1***

330156A
Adjuster Knob ***x4***

115015
Brake Spring ***x2***

115017
Throttle Rod Spring ***x1***

48

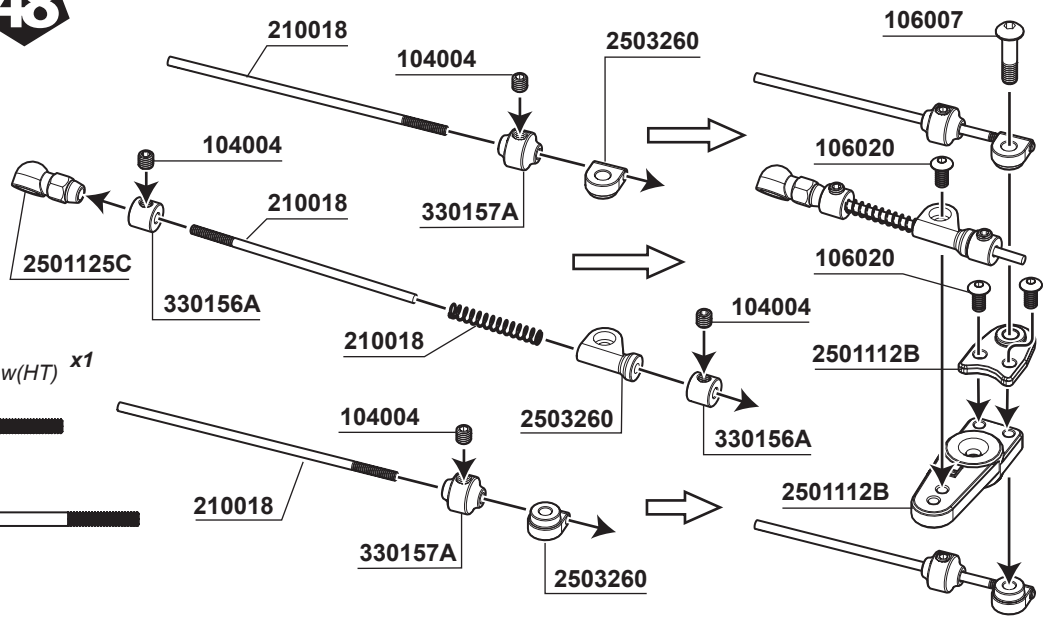

49

OPTION:
SW-338079-25 SWORKz Uni-Design Aluminum Throttle Servo Horn 25T
SW-338079-23 SWORKz Uni-Design Aluminum Throttle Servo Horn 23T

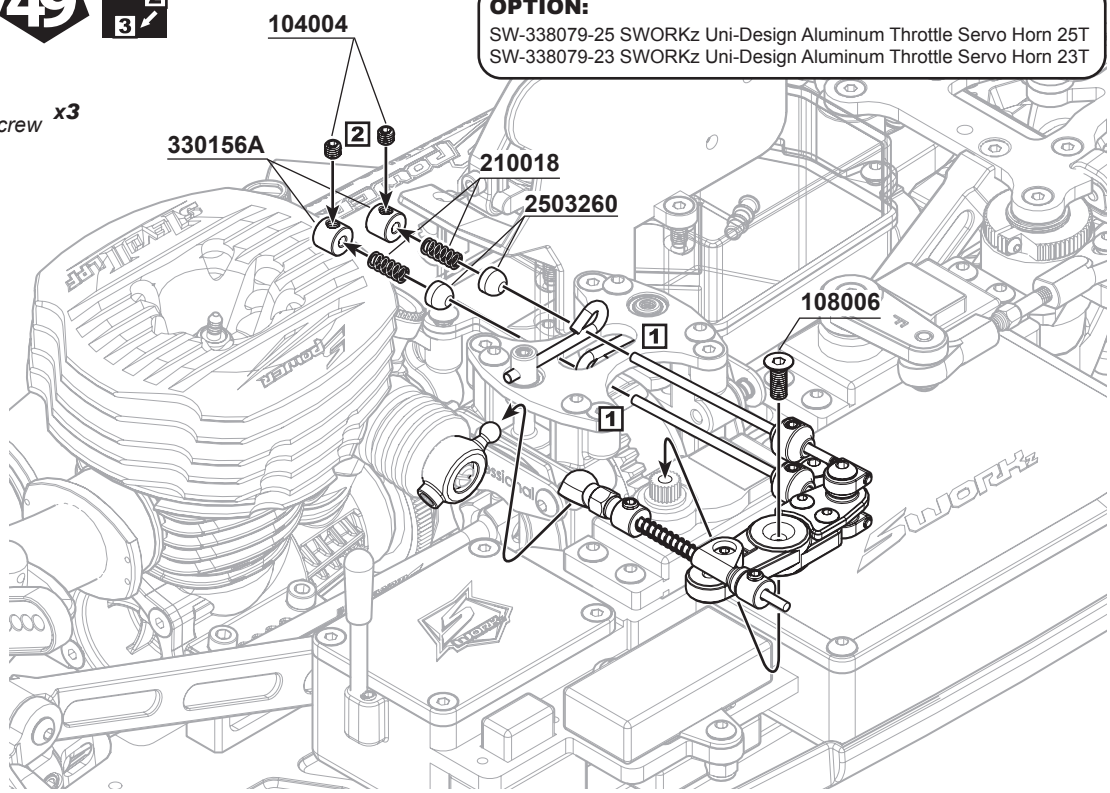

50

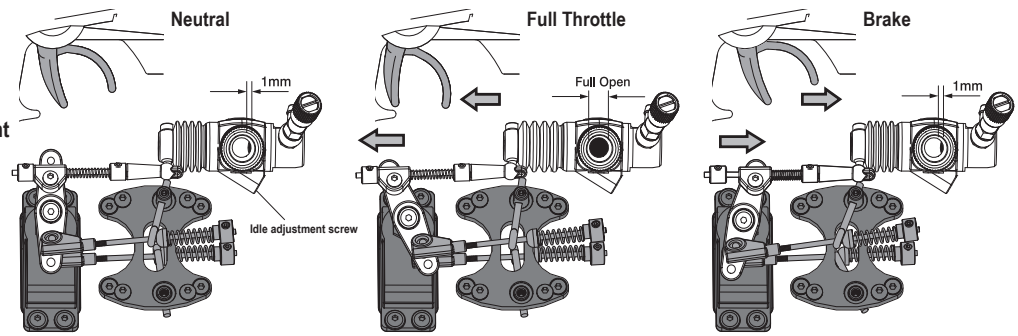

※ Turn on the transmitter and receiver. Set the throttle servo trim in neutral. Adjust the idle adjustment screw to make the carburettor opening no more than 1mm. Adjust the position of servo horn. Check that it operates smoothly without making the operation of the other parts difficult.
Make sure the brake does not work in this setting.

※ Adjust the servo horn to fully open the carburettor. Change the position of servo horn if the carburettor is not fully open or opens too much. If your transmitter has a function to adjust throttle end points, make an adjustment this way.

※ Adjust the position of servo horn to make the brakes function. Make sure the brakes do not work when the servo trim is in neutral.

BAG K

51

F R x2 For Front x2 For Rear

330635(L)
S350 New BBS System +5.5mm Shock Shaft (L) x2

330636(S)
S350 New BBS System +1.3mm Shock Shaft (S) x2

103004
M2.5mm Nut Lock x4

210058
Shock Seal Washer 3.5X7X1.0mm x4

210058
Shock Seal Washer 3.6X7X2.5mm x8

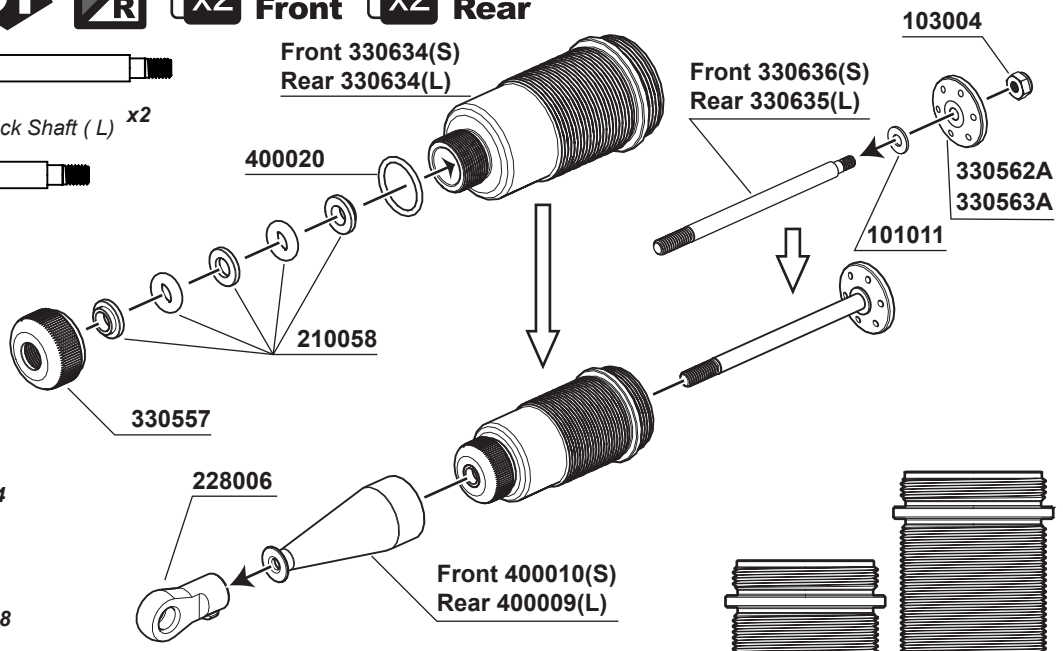

52

101011
M2.6x6xT0.6mm x4

210058
Shock Seal O-Ring x8

400020
Shock Seal O-Ring x4

400019
Shock Spring Adjust Nut O-Ring x4

108029
M2.0x4.6mm FH/ST HEX Screw (1.5mm HexHead) x4

Standard bladder shock cap assembly note

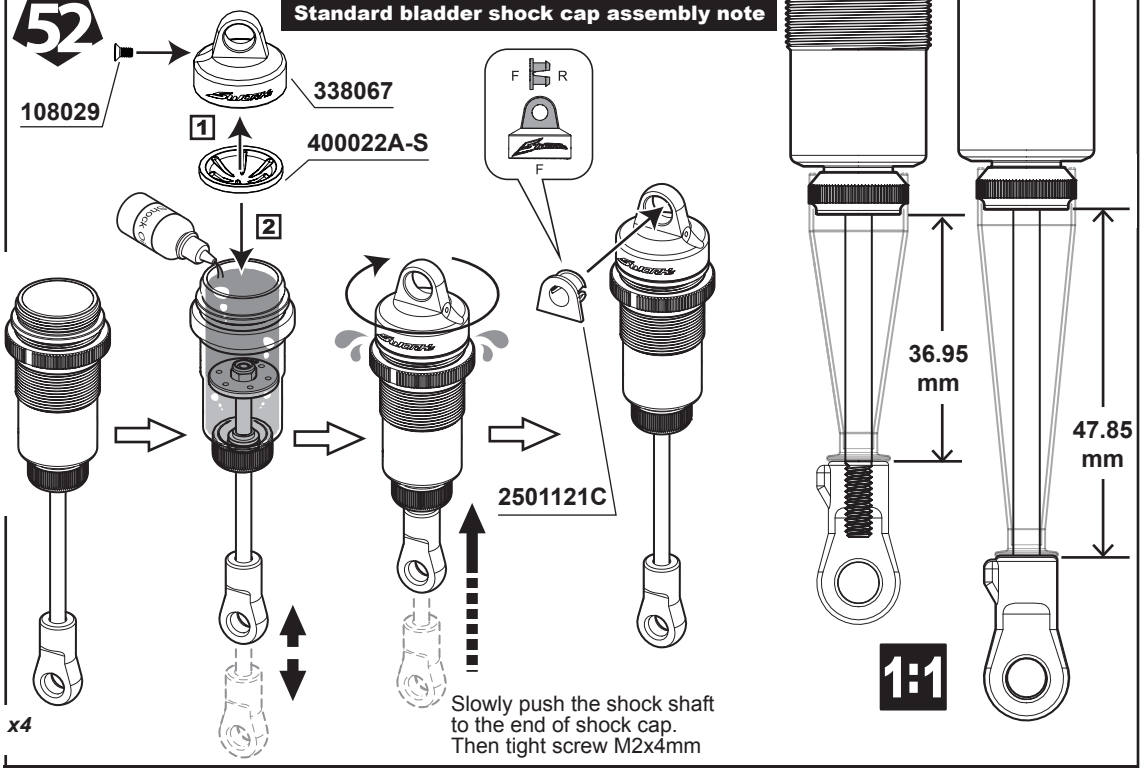

Slowly push the shock shaft to the end of shock cap. Then tight screw M2x4mm

53

F R x2 For Front x2 For Rear

115170
S350 BBS Option Shock SpringB-1(90X1.4X7.5) x2

115168
S350 BBS Option Shock SpringA-1(75X1.4X6.5) x2

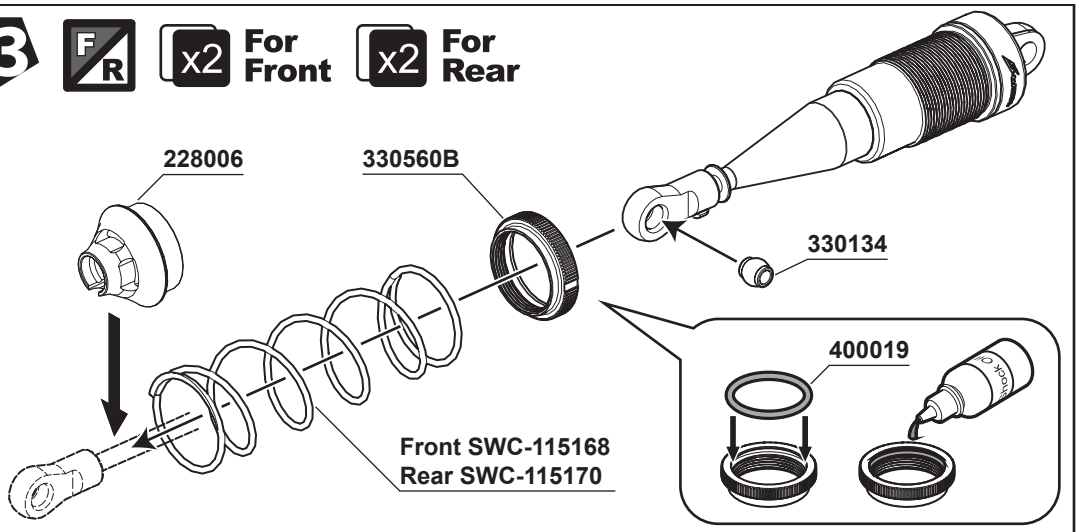

BAG K

51

F R x2 For Front x2 For Rear

330635(L)
S350 New BBS System +5.5mm Shock Shaft (L) x2

330636(S)
S350 New BBS System +1.3mm Shock Shaft (S) x2

103004
M2.5mm Nut Lock x4

210058
Shock Seal Washer 3.5X7X1.0mm x4

210058
Shock Seal Washer 3.6X7X2.5mm x8

101011
M2.6x6xT0.6mm x4

210058
Shock Seal O-Ring x8

400020
Shock Seal O-Ring x4

400019
Shock Spring Adjust Nut O-Ring x4

108029
M2.0x4.6mm FH/ST HEX Screw (1.5mm HexHead) x4

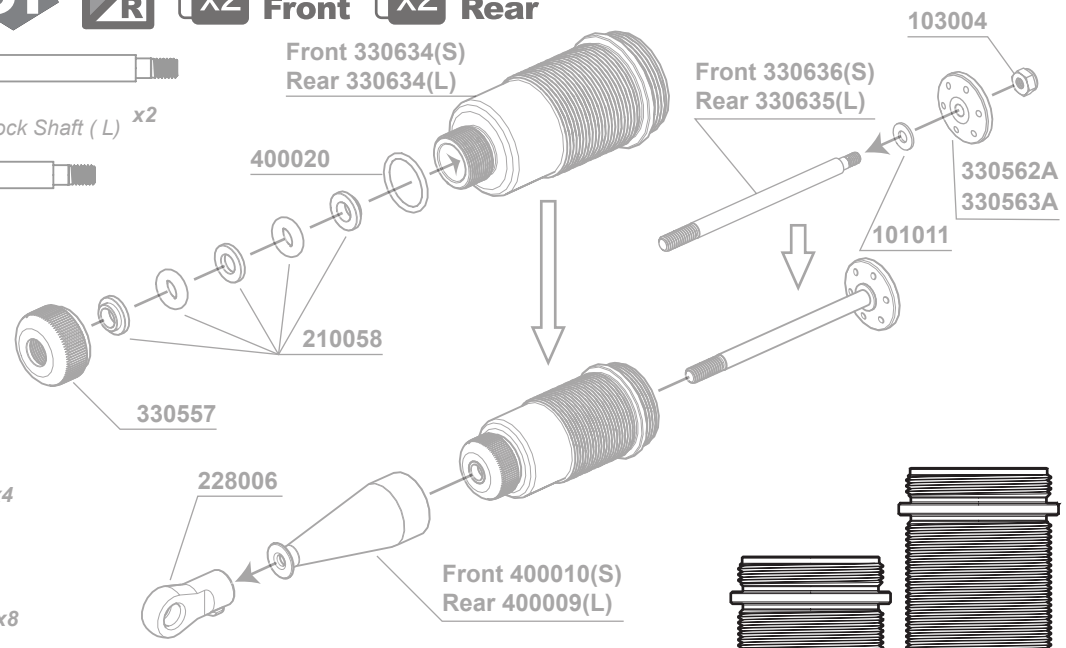

52

Emulsion shock cap system assembly note

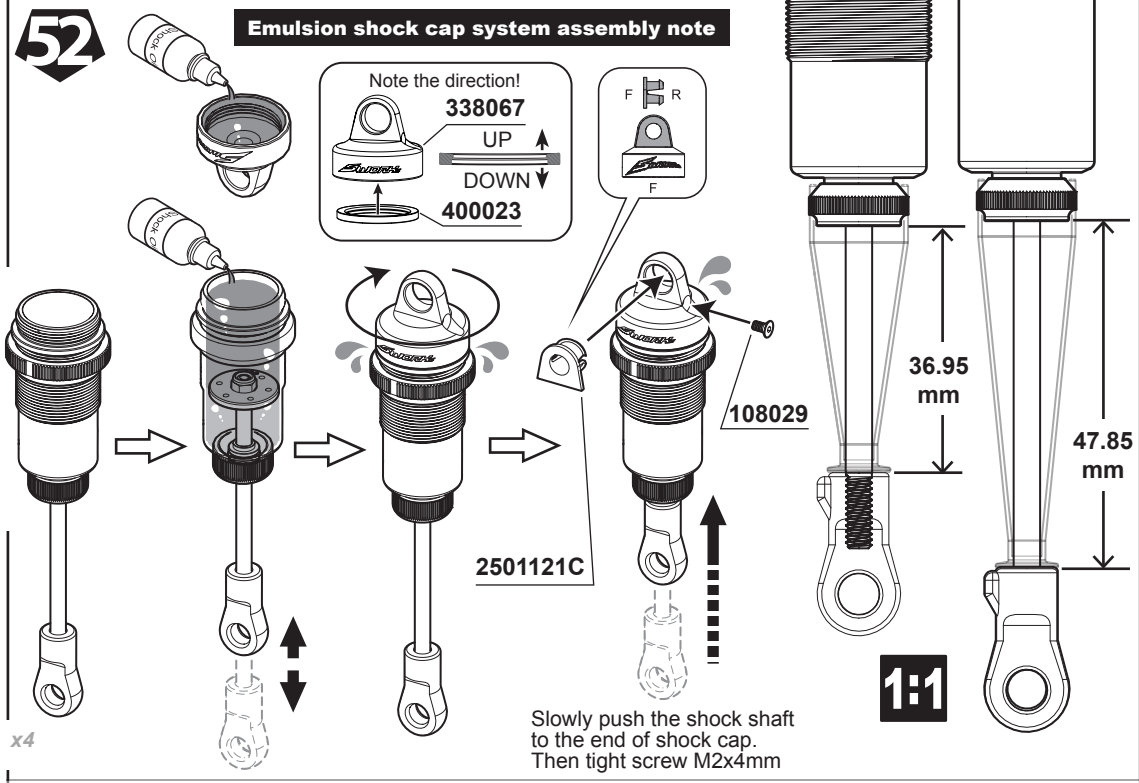

53

F R x2 For Front x2 For Rear

115170
S350 BBS Option Shock SpringB-1(90X1.4X7.5) x2

115168
S350 BBS Option Shock SpringA-1(75X1.4X6.5) x2

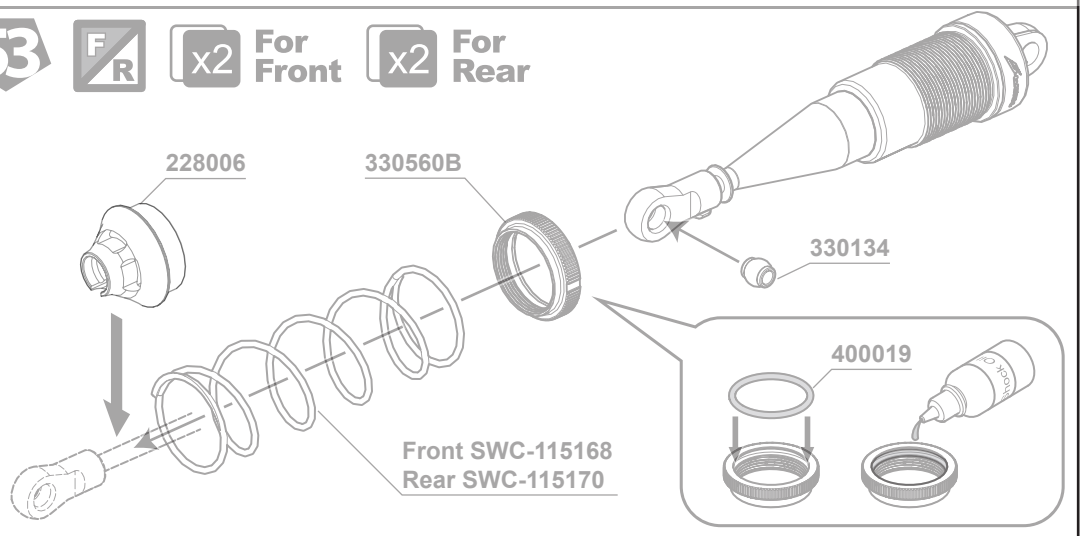

BAG J

105006A
M3x28mm Cap Screw x2

105013A
M3x25mm Cap Screw x2

54

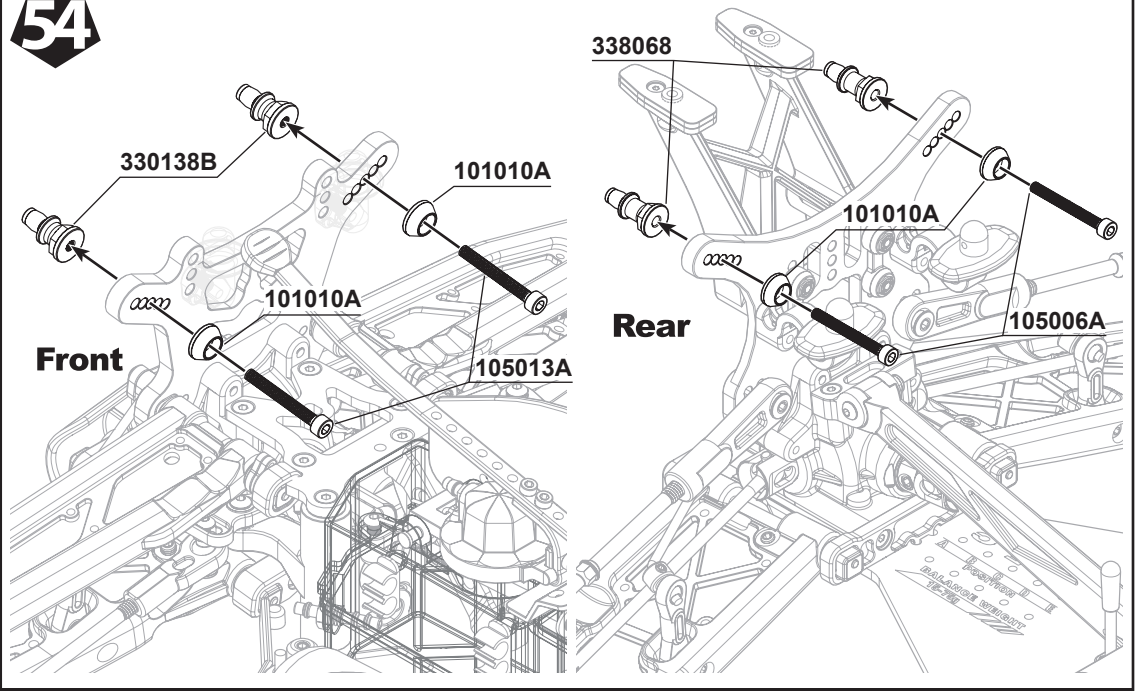

55

103003A
Flange M3 Nut Lock x4

330243
SWORKz 3x16mm Shock Hex Screw Clockwise x2

330243
SWORKz 3x16mm Shock Hex Screw Anti-Clockwise x2

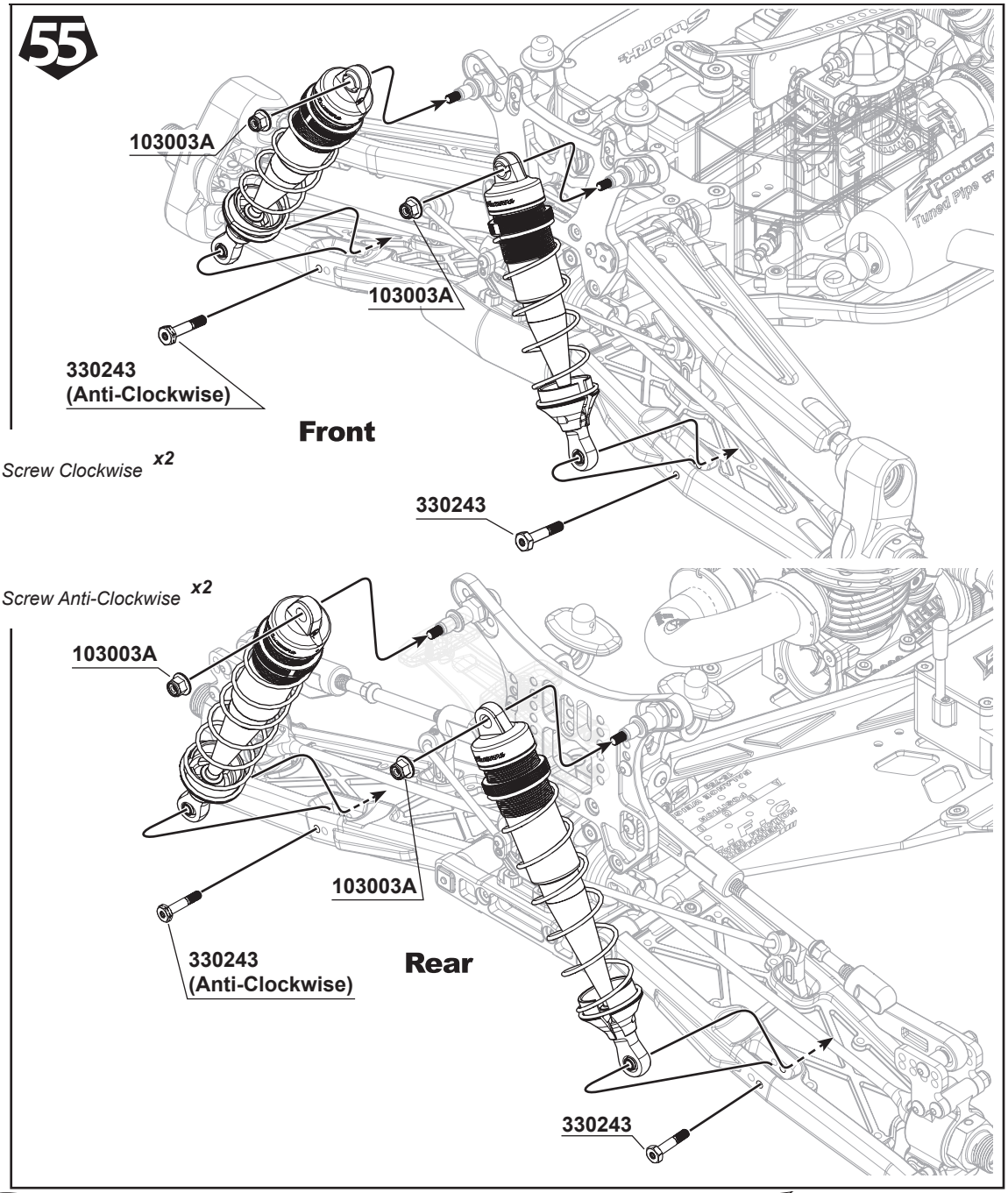

56



108006
M3x8mm FH/ST HEX Screw x1

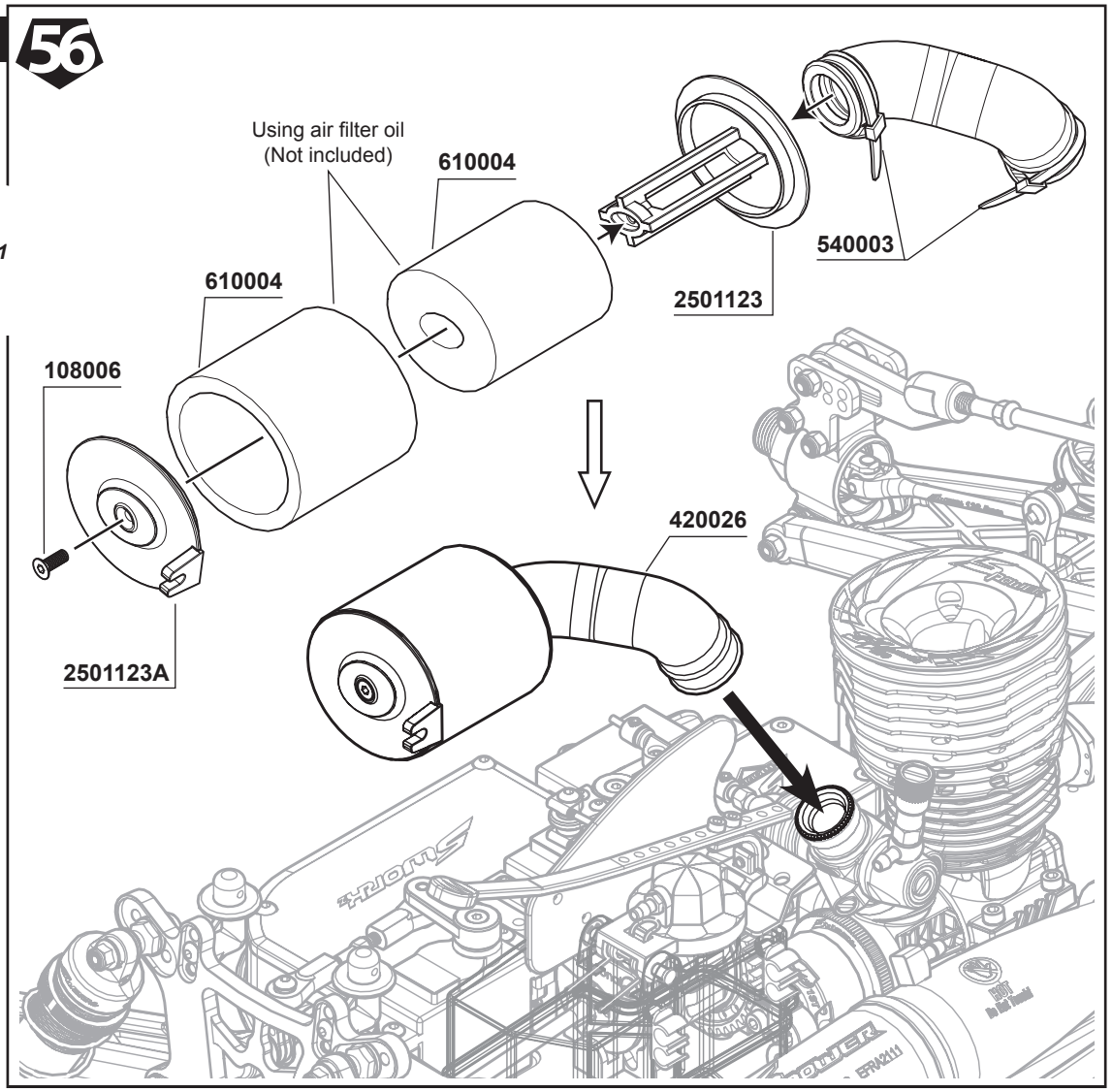

57

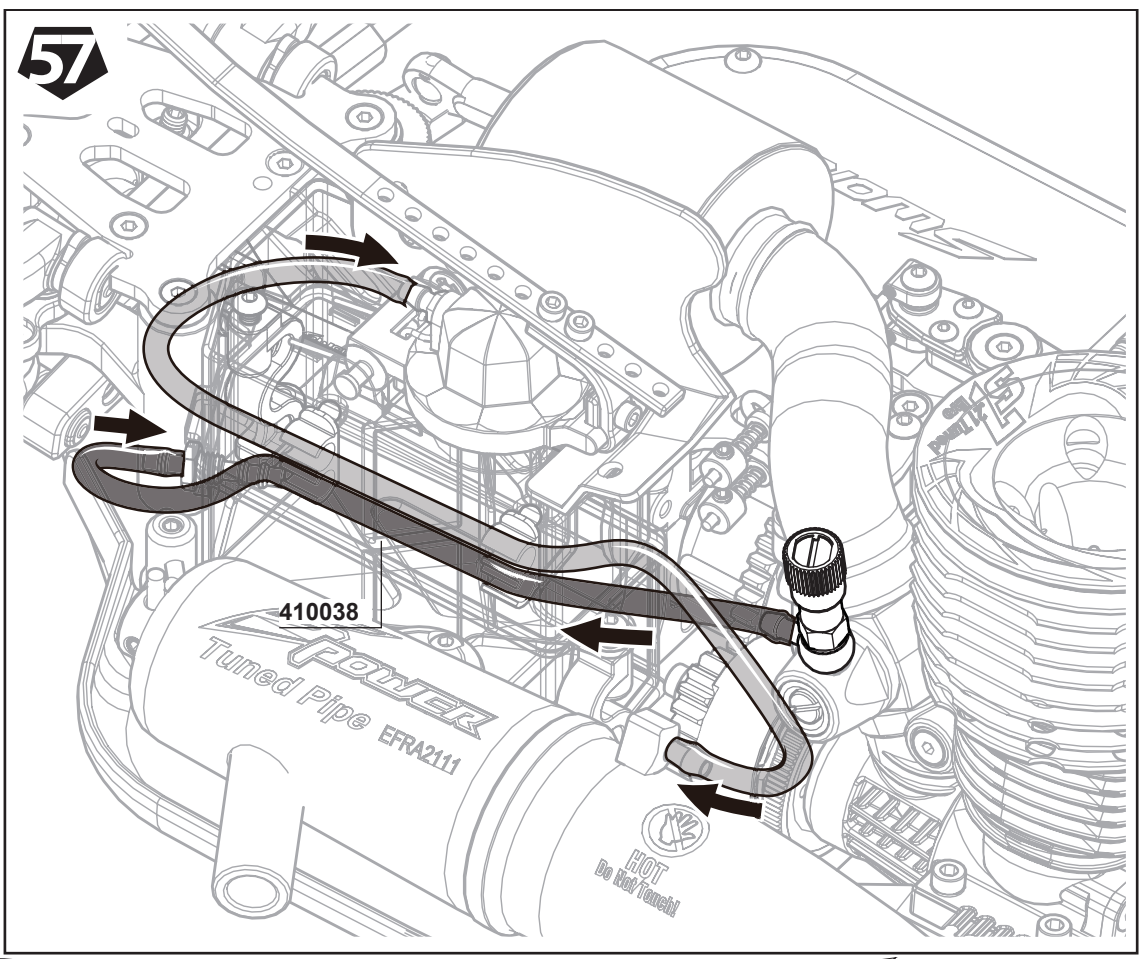

58

Attention!
The S35-T2 body post positions are different as of the body shell's. Please check the “RED DOTs” marked on the body shell. Or follow the manual's instructions for the actual body posts positions.

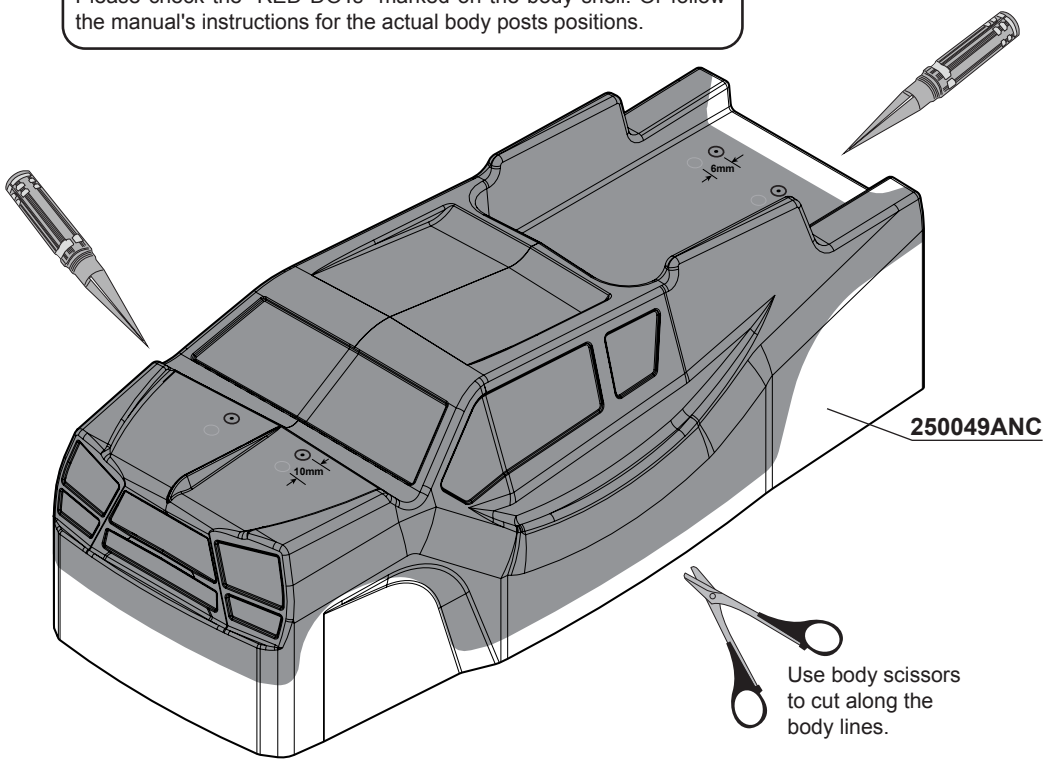

59

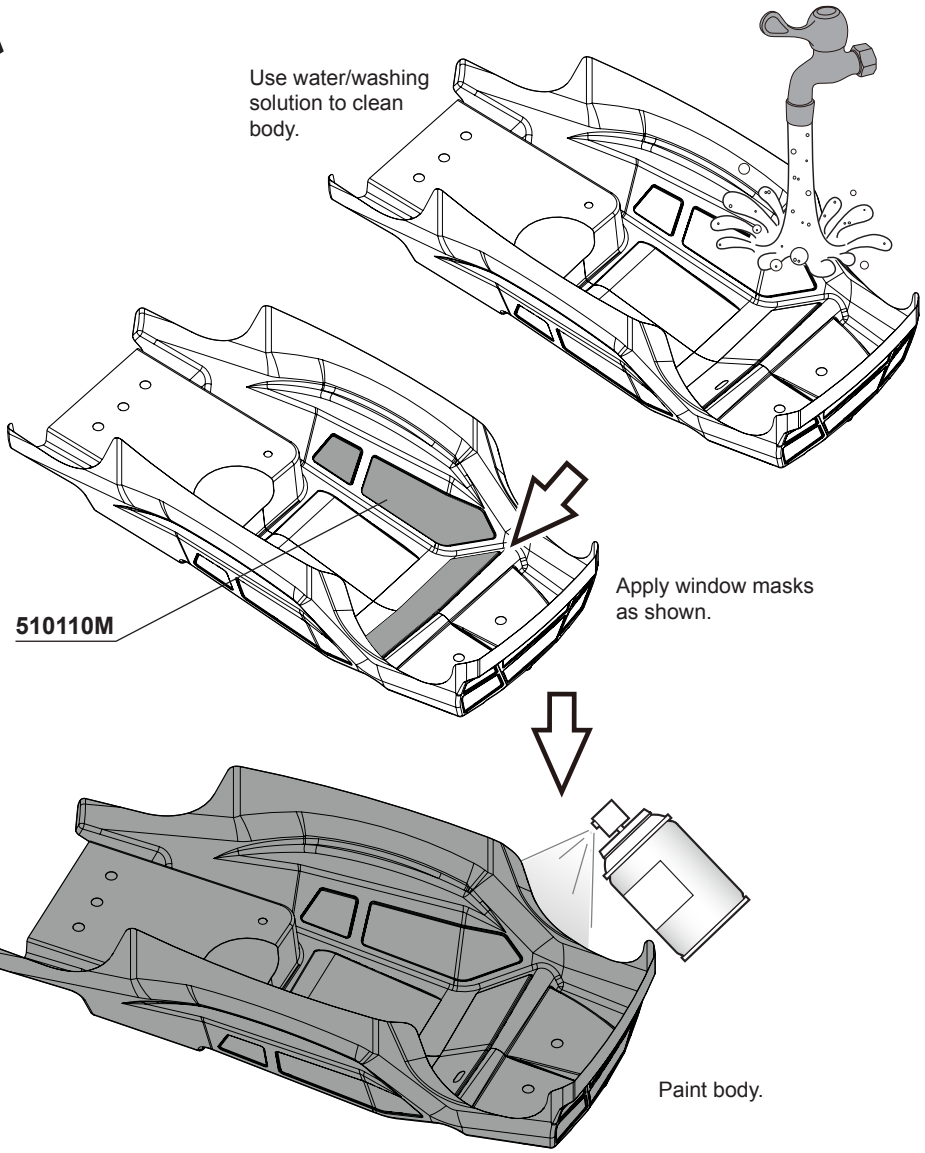

BAG M

105005
M3x12mm Cap Screw ***x2***

106025
M2.5x8mm Hex Socket OH/TP Screw ***x5***

330122A
Wheel Nut ***x4***

60

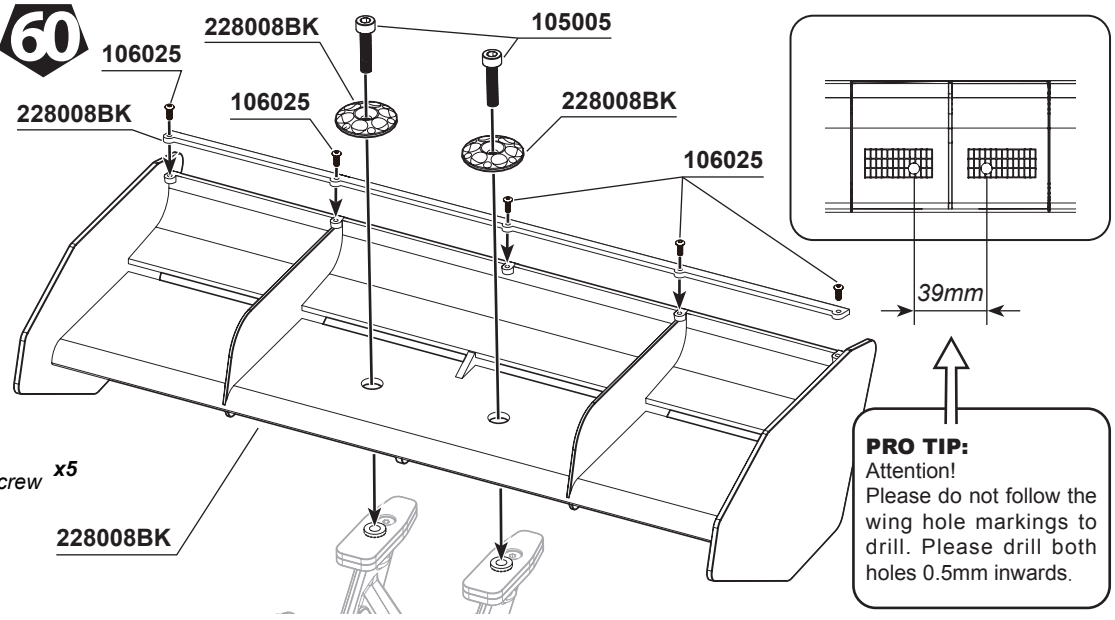

PRO TIP:
Attention!
Please do not follow the wing hole markings to drill. Please drill both holes 0.5mm inwards.

61 L R

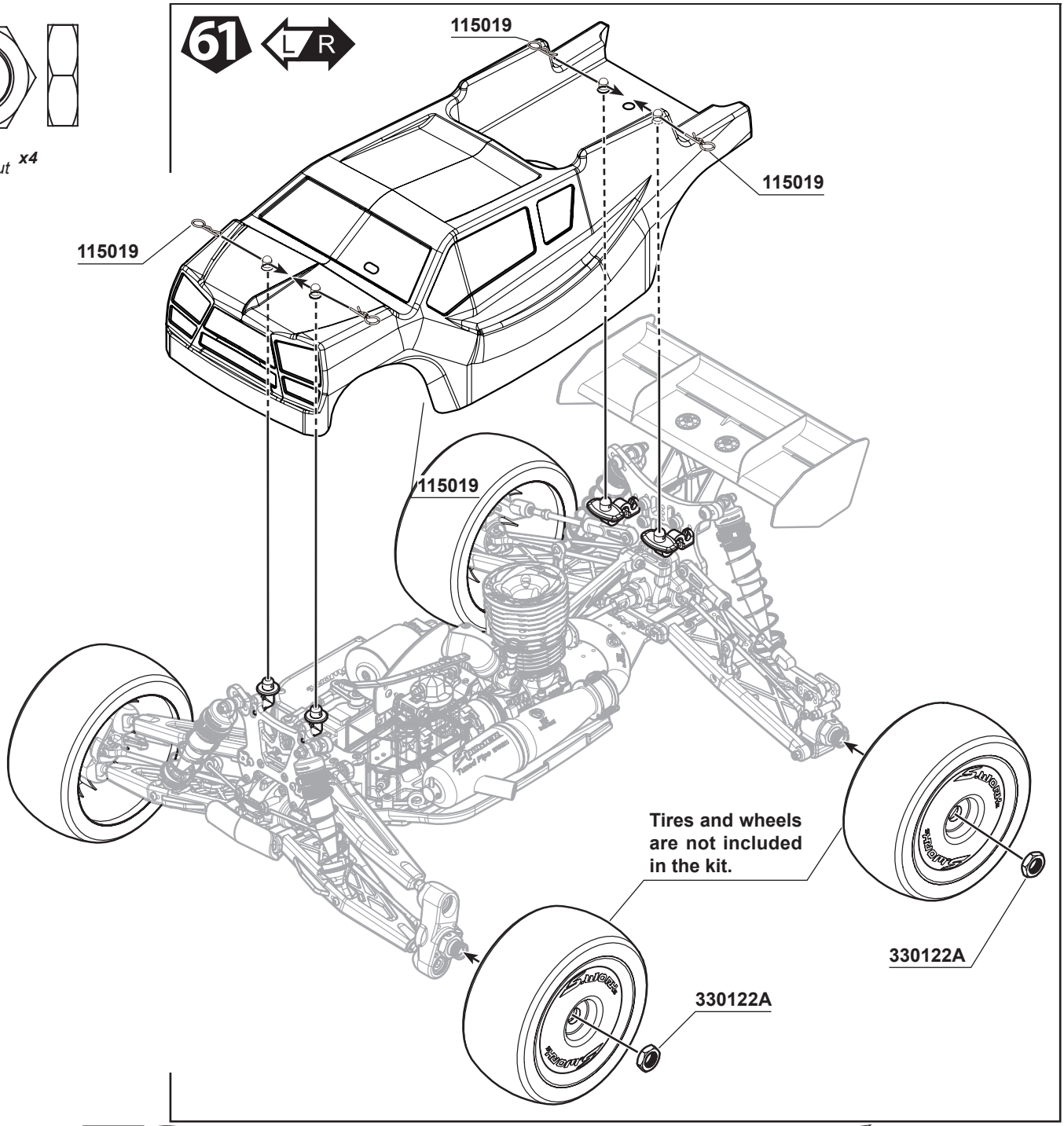

S35-T2

1/8 OffRoad Nitro Power Pro Truggy

SWORKZ www.sworkz.com

SET-UP SHEET

Race time / Lap:

Best lap: 31.8

Name: Elliott Boots
Date: 06/06/2021
Track: NWN

Diff. Oil
Front: 30,000
Center: 15,000
Rear: 10,000

Track Conditions
Size: ☑ Open ☑ Med. ☐ Tight
Traction: ☑ High ☐ Med. ☐ Low
Surface: ☐ Smooth ☐ Med. ☑ Bumpy

Tire
Front Type: Magic Square T3 Foam: Standard
Rear Type: Magic Square T3 Foam: Standard

Engine
Type: Reds 721 scuderia Gen 2 **Muffler:** 2143 x-one
Gasket: ____ mm **Fuel:** Shoot fuel
Plug: TS3

Clutch
Clutch shoes: 4 x ALU
Spring: 4 x 1.0 mm
Clutch bell / Spur gear: 14/46

Front Suspension

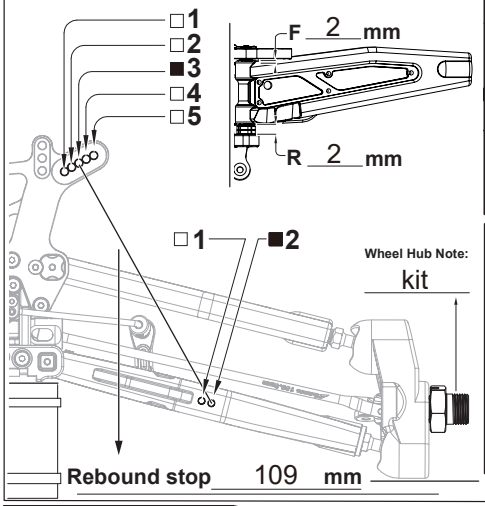

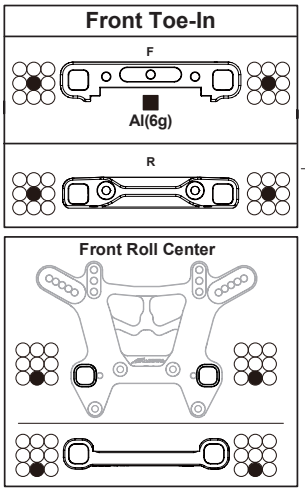

mm

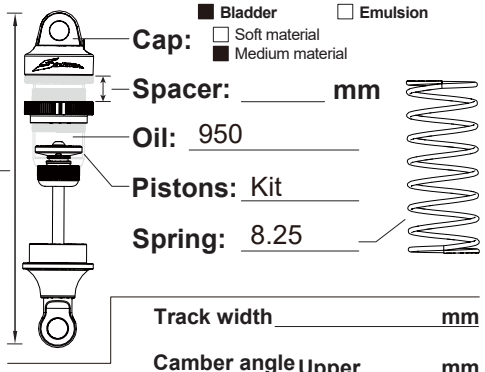

Track width ____ mm

Camber angle Upper ____ mm
Lower ____ mm

Toe angle 1 °

Sway bar ■Use 2.4 mm ☐None

Camber Angle
L: 1 °
R: 1 °

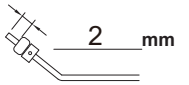

Front Ride Height
Chassis
26 mm
Ground

Steering Ackerman
☐1 ☐2 ☐3 ■4

Notes:
Fastrace caps

Rear Suspension

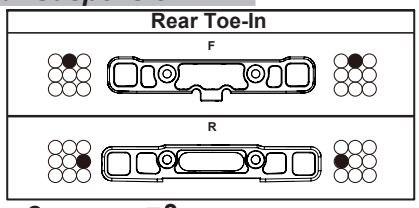

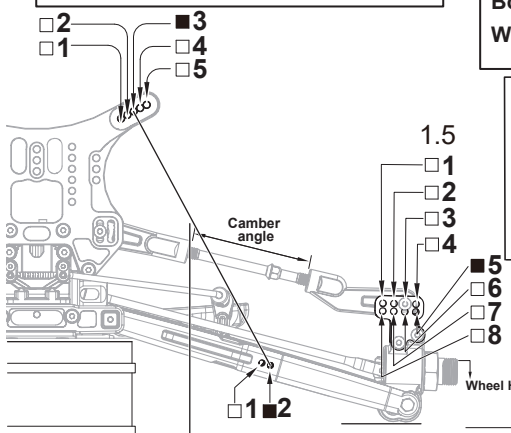

Body:
Wing:

Wing Position
■H ☐M ☐L
■H ☐M ☐L
Wing Angle: +10mm °

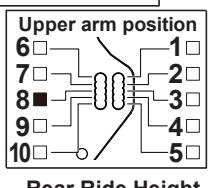

Rear Ride Height
Chassis
31 mm
Ground

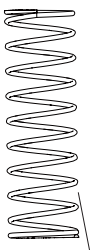

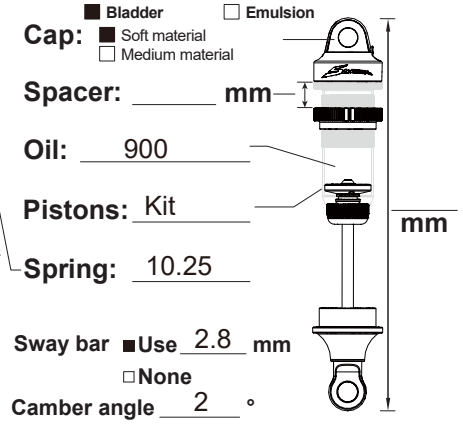

Sway bar ■Use 2.8 mm ☐None

Camber angle 2 °



Notes:
Fastrace caps

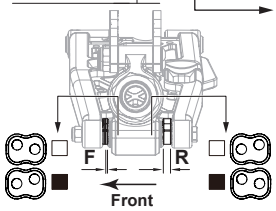

Wheelbase adjustment
F 5 mm
R 0 mm

C ☐ Brass(15g) x ____
A ■ Brass(15g) x 1 D ☐ Brass(15g) x ____
B ■ Brass(15g) x 1 E ☐ Brass(15g) x ____

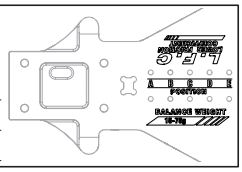

Option Parts List

Front Upper Arm

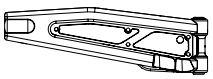

Carbon Cover 1 mm

Front Lower Arm

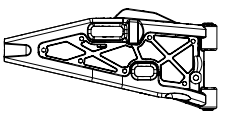

Carbon Cover 0 mm

Rear Lower Arm

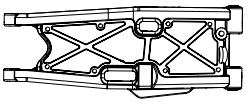

Carbon Cover 0 mm

S35-T2

1/8 OffRoad Nitro Power Pro Truggy

SWORKZ www.sworkz.com

SET-UP SHEET

Race time / Lap: _____

Best lap: _____

Name: _____
Date: _____
Track: _____

Diff. Oil
Front: _____
Center: _____
Rear: _____

Track Conditions
Size: □ Open □ Med. □ Tight
Traction: □ High □ Med. □ Low
Surface: □ Smooth □ Med. □ Bumpy

Tire
Front Type: _____ Foam: _____
Rear Type: _____ Foam: _____

Engine
Type: _____ Muffler: _____
Gasket: _____ mm Fuel: _____
Plug: _____

Clutch
Clutch shoes: _____
Spring: _____ mm
Clutch bell / Spur gear: _____

Front Suspension

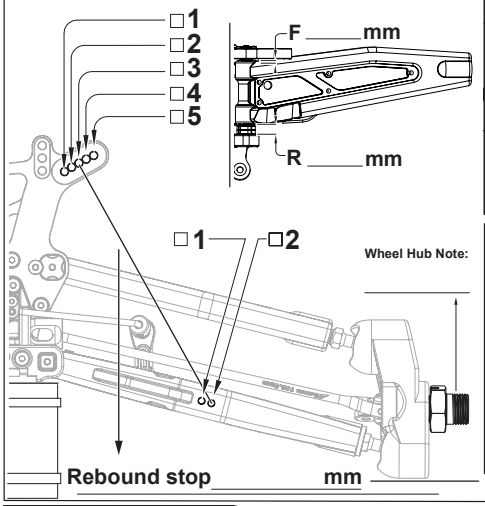

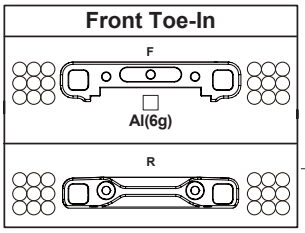

mm

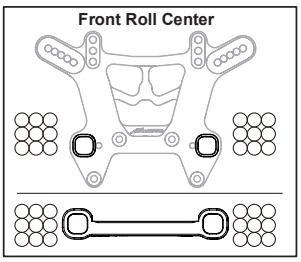

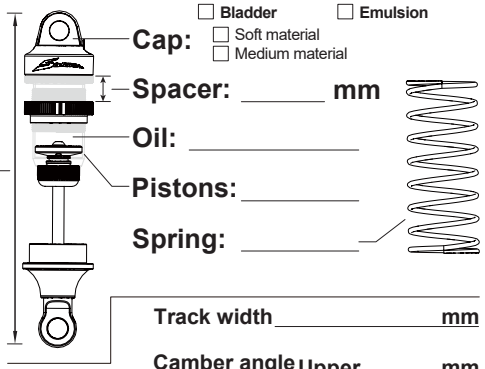

Track width _____ mm

Camber angle Upper _____ mm
Lower _____ mm

Toe angle _____ °

Sway bar □Use _____ mm
□None

Camber Angle
L: _____ °
R: _____ °

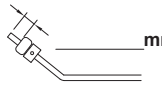

_____mm

Front Ride Height
Chassis
_____mm
Ground

Notes: _____

Steering Ackerman

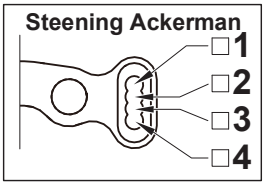

Rear Suspension

Rear Toe-In

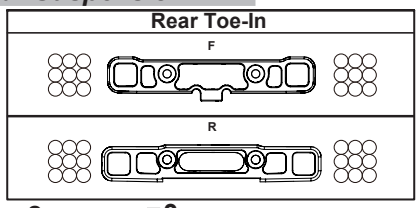

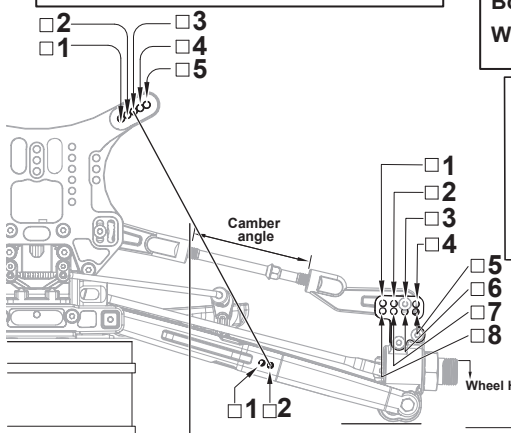

Body: _____
Wing: _____

Wing Position
□H
□M
□L
□H
□M
□L
Wing Angle: ____ °

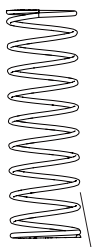

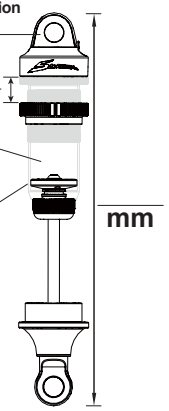

Upper arm position

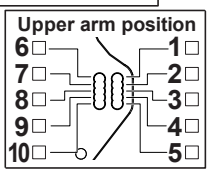

Sway bar □Use ____ mm
□None

Camber angle _____ °

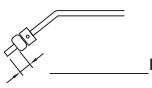

_____mm

Rear Ride Height
Chassis
_____mm
Ground

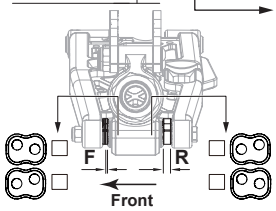

Wheelbase adjustment
F ____ mm
R ____ mm

A □ Brass(15g) x ___
B □ Brass(15g) x ___
C □ Brass(15g) x ___
D □ Brass(15g) x ___
E □ Brass(15g) x ___

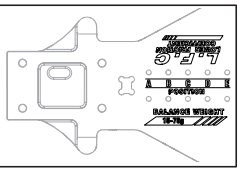

Notes: _____

Option Parts List

Front Upper Arm

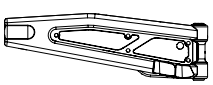

Carbon Cover
_____mm

Front Lower Arm

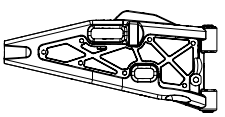

Carbon Cover
_____mm

Rear Lower Arm

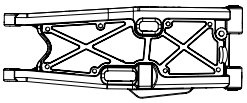

Carbon Cover
_____mm

Parts No. List

Part No.	Part Name	Q`ty in Use	Item No.
210091	S35-3W Plastic Front/Rear Big Bore Diff Case	2	SW-210091
210079A	S35-4 Plastic Center Big Bore HET Diff Case	1	SW-210079A
210048X	S35-T/S35-GT Tubed Floating Fuel Filter System Tank Set (150cc)	1	SW-210048X
2501115	S350 Rear Lower Arm Dusty Cover with Fuel Sprinkle Guard	1	SW-2501115
2501124	S350 Center Diff. Mount Set	2	SW-2501124
2501529	S350 BX1/BR1Rear Chassis Brace	1	SW-2501529
2501097B	S35 Series Front Bumper	1	SW-2501097B
2501121C	S35/S350 Series Ball End Set with Shock Plastic Parts	2	SW-2501121C
2501122B	S35/S350 Series Settring Bellcrank Set 2.0 Set (with Servo Horn)	1	SW-2501122B
2501126A	S350/S350T Series Option Air Filter Extension Set	1	SW-2501126A
2502040-01	S350T Rear Plastic Chassis Brace	1	SW-2502040-01
2502040-02	S350T Body Mount with Fuel Tank Ring-pull	1	SW-2502040-02
2503260	S353 Series Plastic Inserts Set	1	SW-2503260
2503261A	S35-3/GT Series Gear Box Set (Fit 5x13x4mm Ball Bearing)	2	SW-2503261A
2503262	S35-3 Nitro Buggy Radio Tray Set	1	SW-2503262
2503264A	S35-3 Series Front Steering Knuckle (Type 2.0) L	1	SW-2503264A
2503270-3	S35-3 Series Front Steering Ball Ends	2	SW-2503270-3
228001	S35-4 Series Plastic Inserts Set	2	SW-228001
228002-1	S35-4 Series Plastic Rear Wheel Hub (R=L)	2	SW-228002-1
228002-2	S35 Series Plastic Front Chassis Shorty Brace	1	SW-228002-2
228003A	S35 Series Integrated Wing Mount Set 2.0	1	SW-228003A
228004A	S35-4 Series Plastic Side Guard Set with Stopper	1	SW-228004A
228006	S35 Series Shock End/Body Mount/Ball Ends Set	2	SW-228006
228008BK	SWORKz 1/8 Off Road Formula 2.0 Race Wing (BK)	1	SW-228008BK
228010-F	S35-T2 Series Front Lower Arm	2	SW-228010-F
228010-R	S35-T2 Series Rear Lower Arm	2	SW-228010-R
228011	S35-T2 Series Front Upper Arm	2	SW-228011
210058	S350 New BBS System Shock Seal Washer 3.6X7X2.5mm	8	SW-210058
210058	S350 New BBS System Shock Seal Washer 3.5X7X1.0mm	4	SW-210058
210046	S350 Series LDS Universal Cross Drive Shaft Set 92.5mm (1pc)	4	SW-210046
210043	S350 Professional Matel Brake Calipers 2.0 A Side	2	SW-210043
210043	S350 Professional Matel Brake Calipers 2.0 B Side	2	SW-210043
210018	Brake Spring	2	SW-210018
210018	Throttle Rod 50mm	1	SW-210018
210018	Throttle Rod Spring	1	SW-210018
210018	Brake Rod 60mm	2	SW-210018
200193	Antenna Tube	1	SW-200193
250049ANC	S35-T2 Speed Rhinocero III Pre-Cut Nitro Body Shell (Clean/1.5mm)	1	SW-250049ANC
320010	S35-3W Diff. Bevel Gear 10T	12	SW-328001
320009	S35-3W Diff. Bevel Gear 20T	6	SW-328001
330006	Tornado Clutch Shoes	3	SW-330006
330008A	SWORKz Tornado Fly Wheel Set (GM)	1	SW-330008A
330008A	Tornado Fly Wheel Center Nut	1	SW-330008A
330008A	Fly Wheel Collect	1	SW-330008A
330015	Pin M2.2x9.9mm	6	SW-330015
330090	S350 Series Carbon Fiber Center Diff. Plate	1	SW-330090
330100A	S350 Engine Mount (L) (HC)	1	SW-330100A
330100A	S350 Engine Mount (R) (HC)	1	SW-330100A
330104	Brake Cam (S)	1	SW-330104
330104	Brake Cam (L)	1	SW-330104
330104	Brake Cam	1	SW-330104
330114A	S350 Sseries Servo Saver Post (HC)	1	SW-330114A
330117A	S350 Series Knuckle Pivot Ball Washer(GM)	2	SW-330117A
330118A	S350 Series Knuckle Pivot Ball Nut(GM)	4	SW-330118A
330119	Front Upper Arm HingPin	2	SW-330119
330121A	S350 Wheel Hub(HC)	4	SW-330121A
330122A	S350 Wheel Nut (HC)	4	SW-330122A
330124	Pin M3.0x16.8mm	4	SW-330124
330125	Rear Upper Sus. Arm Ball Stud	4	SW-330125
338089	S35-T2/E Steering Linkage Turnbuckle M4x80mm	2	SW-338089
330134	Shock Ball Stud	12	SW-330134
330136	Sway Bar Ball Stud	4	SW-330136
330137	Clutch Bell 13T	1	SW-330137
330138B	S350 EVO Aluminum Shock Cap Stud (-1.3mm)	2	SW-330138B
330140A	Pipe Holder(GM)	1	SW-330140A
330140A	Pipe Spring	1	SW-330140A
330155	Steering Servo Turnbuckle (M3x30mm)	2	SW-330155
330156A	Adjuster Knob(GM)	4	SW-330156A
330157A	Brake Adjuster Knob(GM)	2	SW-330157A
330243	SWORKz 3x16mm Shock Hex Screw Clockwise	2	SW-330243
330243	SWORKz 3x16mm Shock Hex Screw Anti-Clockwise	2	SW-330243
330252	S350 BX1/BR1 Steering Knuckle Pivot Ball Turnbuckle	4	SW-330252
330399B	S35-3 Series Aluminum Rear Chassis Brace Mount (GM)	1	SW-330399B
330458	S350T Rear Upper Arm Turnbuckle M5x72mm	2	SW-330458
330557	S350 New BBS System Shock Seal Cap (GM)	4	SW-330557
330560B	S35 New BBS System Shock Spring Adjust Nut (BK)	4	SW-330560B
330562A	S350 New BBS System Shock Piston 1.3mmX6 Holes (BK)	2	SW-330562A
330563A	S350 New BBS System Shock Piston 1.4mmX6 Holes (BK)	2	SW-330563A
330580	S350 Competition Series Professional Brake Disc	2	SWC-330580
330633	S350 BBS System +5.6mm Shock Body L (HD)	2	SW-330633
330634	S350 BBS System +5mm Shock Body S (HD)	2	SW-330634
330635	S350 New BBS System +5.5mm Shock Shaft (L)	2	SW-330635
330636	S350 New BBS System +1.3mm Shock Shaft (S)	2	SW-330636
330647	S350 BBD Special Brake Cam	1	SWC-330647
330661A	S35-T/S35 Series Competition Center Drive Join (5mm set screw)	2	SW-330661A
330767A	S35-3 Series Steel F-Center Dive Shaft (88mm)	1	SW-330767

Part No.	Part Name	Q`ty in Use	Item No.
330777A	S35-4 Series Steering Linkage Ball Stud 7mm (L7)	4	SW-330777A
330782	S35-3 Series Rear Hub Carriers Hinge Pin	2	SW-330782
330822	S35-T Steel Center Rear Drive Shaft 165mm	1	SW-330822
338011	S35 series Pinion Gear Stopper (5x7x5.1mm)	2	SW-338011
338014	S35-3W T-7075AL Rear Lower Fully Adjustable Toe-In Block (3 degree)	1	SW-338014
338025	S35-3W Bevel Gear Shaft	6	SW-338025
338027	S35-3W Front/Rear Diff. Outdrive	4	SW-338027
338028	S35-3W Center Diff. Outdrive	2	SW-338028
338041	S35-3/4 Series Center HET Spur Gear (48T)	1	SW-338041
338043	S35-3/4 Series Servo Saver Nut with Screw Fixed	1	SW-338043
338045	S35-T Series HET System Pinion Gear 10T	2	SW-338045
338046	S35-T Series HET System Crown Gear 46T	2	SW-338046
338048	S35-4 Series Servo Saver Shaft	2	SW-338048
338049	S35-4 Series T7 Aluminum Rear Front Lower Suspension Plate (RF)	1	SW-338049
338051	S35-4 Series T7 Aluminum Steering Knuckle Plate (R=L)	2	SW-338051
338052	S35-4 Series T7 Aluminum Settring Bellcrank Upper Part-A (with 2Hole)	1	SW-338052
338053	S35-4 Series T7 Aluminum Steering Plate	1	SW-338053
338056	S35-4 Series Lower Arm Hinge Pin (68.5mm)	4	SW-338056
338057	S35-4 Series T7 Aluminum Front Upper Arm Holder	1	SW-338057
338058	S35-4 Series T7 Aluminum Front Lower Arm Plate (FF)	1	SW-338058
338059	S35-4 Series T7 Aluminum Front Lower Arm Holder (FR)	1	SW-338059
338067	S35-4 Series Emulsion/Bladder 2 Ways Syatem Shock Cap	4	SW-338067
338068	S35-4 Series T7 Aluminum Shock Stud (L)	2	SW-338068
338070B	S35 Series Rear Upper Sus. Arm Ball Stud (7.0mm Hex)	2	SW-338070B
338085	S35-T2/E T7075 Aluminum Front Shock Tower	1	SW-338085
338086	S35-T2/E T7075 Aluminum Rear Shock Tower	1	SW-338086
338087	S35-T2 Nitro T7075 Aluminum Lightened Main Chassis	1	SW-338087
340016	S35-4 Series Pro-composite Carbon Rear Wheel Hub Adjust Plate (R=L)	4	SW-340016
340017	S35-4 Series Pro-composite Carbon Steering Bellcrank Plate	1	SW-340017
340028-10	S35-T2 Pro-composite Carbon Front Upper Arm Cover (1.0mm)(2pc)	2	SW-340028-10
400002	O-ring S5 4.8X1.5	6	SW-400002
400005	Shock Spring Adjust Nut O-Ring	4	SW-400005
400006	Shock Seal O-Ring	8	SW-210058
400009	Shock Boot (L)	2	SW-400009
400010	Shock Boot (S)	2	SW-400010
400019	S350 New BBS System Shock Spring Adjust Nut O-Ring	4	SW-400019
400020	S350 New BBS System Shock Seal O-Ring	4	SW-400020
400022A-S	S35 Series BBS System Pro Shock Bladder (Soft)	4	SW-40022A-S
400023	S35 Series BBS System Seal O-Ring for Emulsion Shock Cap	4	SW-400023
410038	Super Silicone Tube 2455x30mm (Transparent)	1	SW-410038
420010	Antenna Cup	1	SW-420010
420011	Fuel Tube	2	SW-420011
420026	S350/S350T Series Option Air Filter Extension Adapter	1	SW-420026
510080A	SWORKz 1/8 Off Road Formula Race Wing Decal	1	SW-228008BK
510091	SWORKz Origional Logo Sticker	1	SW-510091
540003	CABLE STRAPS FOR AIRFILTER	2	SW-540003
610004	Air Filter Outer Foam	1	SW-610004
610004	Air Filter Foam	1	SW-610004
610019	S35-3 Series Servo Saver Spring Dusty Protect Sponge	1	SW-610019
610020	S35-3 Series Center Big Bore Plastic Diff. Case Gasket	1	SW-610020
610023	S35-3W Diff. Gasket (0.4T)	2	SW-610023
115003A	SWORKz Tornado Clutch Spring II (1.0mm)	3	SW-115003A
115004A	Servo Saver Spring	1	SW-115004A
115005	Rear Sway Bar 2.8mm	1	SW-115005
115006	Rear Sway Bar 2.6mm	1	SW-115006
115008A	Front Sway Bar 2.3mm	1	SW-115008A
115011A	S35-GT Series Pipe Spring (L)	1	SW-115011A
115019	Body Clip	2	SW-115019
115035A	Front Sway Bar 2.2mm	1	SW-115035A
115098	Brake Pad Spring	4	SW-115098
115168	S35 Series Black Competition Rear Shock Spring (L2-Dot)(86X1.6X10.75)	2	SWC-115168
115170	S35 Series Black Competition Front Shock Spring (S3-Dot)(70X1.6X8.5)	2	SWC-115170
116004R	Ball Bearing 6x10x3mm (Red Rubber Case)	4	SW-116004R
116006R	Ball Bearing 8x16x5mm (Red Rubber Case)	14	SW-116006R
116009	Ball Bearing M5x8x2.5 ZZ (4PC)	2	SW-116009
116010R	Ball Bearing 5x10x4mm (Red Rubber Case)	2	SW-116010R
116019R	Ball Bearing 5x13x4mm (Red Rubber Case)	4	SW-116019R
117003	Flange Ball Bearing 3x6x2.5mm	4	SW-117003
118001-24	S35-T2/T2e Front Sway Bar 2.4mm	1	SW-118001-24
118001-26	S35-T2/T2e Front Sway Bar 2.6mm	1	SW-118001-26
118002-26	S35-T2/T2e Rear Sway Bar 2.6mm	1	SW-118002-26
118002-28	S35-T2/T2e Rear Sway Bar 2.8mm	1	SW-118002-28
101004	Washer 3.5X10X0.2mm	12	SW-101004
101010A	M3 Countersunk Washer(GM)	4	SW-101010A
101011	M2.6x6xT0.6mm	4	SW-101011
101013	3mm Spring Washer	4	SW-101013
101015	M5x8xT0.4mm	4	SW-101015
101016	M5x8xT0.8mm	1	SW-101016
101018	SHIM 13x16x0.2mm	12	SW-101018
101019	SHIM 6.0x10.0x0.2mm	1	SW-101019
101020A	S350 Sries 3mm Countersunk Washers (GM)	2	SW-101020A
101021	M3x8xT0.8mm	3	SW-101021
101039	Steel Washer 5x12x0.3mm	6	SW-101039
103001	M3 Nut Lock	25	SW-103001
103003A	Flange M3 Nut Lock (GM)	5	SW-103003A
103004	M2.5mm Nut Lock	4	SW-103004

Part No.	Part Name	Q`ty in Use	Item No.
103005	M4mm Nut Lock (BK)	1	SW-103005
104004	M3x3mm Set Screw	13	SW-104004
104005	M3x4mm Set Screw	4	SW-104005
104010	M5x4mm Set Screw (Flat Bottom)	6	SW-104010
104011	M4x4mm Set Screw (Flat Bottom)	1	SW-104011
105001	M3x8mm Cap Screw	1	SW-105001
105005	M3x12mm Cap Screw	6	SW-105005
105018	M2x6mm Cap Head Screw	1	SW-105018
105013A	M3x25mm Cap Screw	4	SW-105013A
105007A	M4x8mm I-Head Screw Thin	4	SW-105007A
105006A	M3x28mm Cap Screw full thread	2	SW-105006A
106001	M3x8mm Hex Soket OH/TP Screw	3	SW-106001
106002	M3x10mm Hex Soket OH/TP Screw	18	SW-106002
106003	M3x16mm Hex Soket OH/TP Screw	8	SW-106003
106006	M3x20mm Hex Soket OH/TP Screw	1	SW-106006
106007	M3x12mm Hex Soket OH/TP Screw (HT)	9	SW-106007
106008	M3x12mm Hex Soket OH/TP Screw	4	SW-106008
106009	M3x25mm Hex Soket OH/TP Screw	10	SW-106009
106013	M2.5x8mm 1.5mmHex Soket OH/ST Screw	6	SW-106013
106015	M3x5mm Hex Soket OH/TP Screw	2	SW-106015
106020	M2.5x5mm 1.5mmHex Soket OH/ST Screw	16	SW-106020
106025	M2.5x8mm Hex Soket OH/TP Screw	5	SW-106025
106021A	S35 Series M4x10mm Hex Soket OH/TP Set Screw	4	SW-106021A
108001	M3x12mm FH/ST HEX Screw	20	SW-108001
108003	M3x10mm FH/ST HEX Screw	21	SW-108003
108005	M3x14mm FH/ST HEX Screw	2	SW-108005
108006	M3x8mm FH/ST HEX Screw	21	SW-108006
108007	M3x6mm FH/ST HEX Screw	10	SW-108007
108008	M3x35mm FH/ST HEX Screw	4	SW-108008
108010	M4x10mm FH/ST HEX Screw	6	SW-108010
108011	M4x12mm FH/ST HEX Screw	1	SW-108011
108012	M4x16mm FH/ST HEX Screw	8	SW-108012
108013	M4x8mm FH/ST HEX Screw	1	SW-108013
108019	M2.6x6mm FH/ST HEX Screw	2	SW-108019
108029	M2.0x4.6mm FH/ST HEX Screw (1.5mm HexHead)	4	SW-108029

Item No.	Part Name
SW-228001	S35-4 Series Plastic Inserts Set (2Set)
SW-228002-1	S35-4 Series Plastic Rear Wheel Hub (R=L)(2PC)
SW-228002-2	S35 Series Plastic Front Chassis Shorty Brace (1PC)
SW-228003A	S35 Series Integrated Wing Mount Set 2.0
SW-228004A	S35-4 Series Plastic Side Guard Set with Stopper
SW-228006	S35 Series Shock End/Body Mount/Ball Ends Set (2Set)
SW-228008BK	SWORKz 1/8 Off Road Formula 2.0 Race Wing (BK)
SW-228010-F	S35-T2 Series Front Lower Arm (1PC)
SW-228010-R	S35-T2 Series Rear Lower Arm (1PC)
SW-228011	S35-T2 Series Front Upper Arm (1PC)
SW-2501097B	S35 Series Front Bumper (2PC)
SW-2501115	S350 Rear Lower Arm Dusty Cover with Fuel Sprinkle Guard
SW-2501121C	S35/S350 Series Ball End Set with Shock Plastic Parts
SW-2501122B	S35/S350 Series Settring Bellcrank Set 2.0 Set (with Servo Horn)
SW-2501124	S350 Center Diff. Mount Set (2 Set)
SW-2501126A	S350/S350T Series Option Air Filter Extension Set
SW-2501529	S350 BX1/BR1Rear Chassis Brace
SW-2502040-01	S350T Rear Chassis Brace
SW-2502040-02	S350T Body Mount with Fuel Tank Ring-pull
SW-2503260	S35-3 Series Plastic Inserts Set
SW-2503261A	S35-3/GT Series Gear Box Set (Fit 5x13x4mm Ball Bearing)
SW-2503262	S35-3 Nitro Buggy Radio Tray Set
SW-2503264A	S35-3 Series Front Steering Knuckle (Type 2.0)
SW-2503270-03	S35-3 Series Front Steering Ball Ends (4PC)
SW-200193	Antenna Tube
SW-210018	Throttl Linkage Set
SW-210043	S350 Professional Matel Brake Calipers 2.0 Set
SW-210048X	S35-GT2/S35-T2 Series Tubed Floating Fuel Filter System Tank Set
SW-210058	S350 series BBS Shock Seal Kit
SW-210079A	S35-4 Plastic Center Big Bore HET Diff Case
SW-210091	S35-3W Plastic Front/Rear Big Bore Diff Case
SW-218018	S35-T2/e Series Universal Cross Drive Shaft Set 136.5mm (1PC)
SW-250049ANC	S35-T2 Speed Rhinocero III Pre-Cut Nitro Body Shell (Clean/1.5mm)
SW-328001	S35-3/4 Series HET Diff. Bevel Gear Set
SW-330006	Tornado Clutch Shoes
SW-330008A	SWORKz Tornado Fly Wheel Set (GM)
SW-330015	Pin M2.2x9.9mm
SW-330090	S350 Series Carbon Fiber Center Diff. Plate
SW-330100A	S350 Sseries Engine Mount Set (HC)
SW-330104	Brake Cam Set
SW-330114A	S350 Sseries Servo Saver Post (HC)
SW-330117A	S350 Series Knuckle Pivot Ball Washer(GM)
SW-330118A	S350 Series Knuckle Pivot Ball Nut(GM)
SW-330119	Front Upper Arm HingPin
SW-330121A	S350 Wheel Hub (HC)
SW-330122A	S350 Wheel Nut (HC)
SW-330124	Pin M3.0x16.8mm
SW-330126A	S350 EVO Steering Turnbuckle M4x40mm
SW-330134	Shock Ball Stud 6mmxL6.7
SW-330136	Sway Bar Ball Stud
SW-330137	Clutch Bell 13T
SW-330138B	S350 Series Aluminum Shock Cap Stud (-1.3mm)(2PC)
SW-330140A	S350 SeriesPipe Holder(GM)
SW-330155	Steering Servo Turnbuckle (M3x30mm)
SW-330156A	S350 Series Adjuster Knob (Included Brake Adjuster Knob)(GM)
SW-330157A	Brake Adjuster Knob(GM)
SW-330243	SWORKz 3x18mm Shock Hex Screw Set (Anti-Clockwise)
SW-330252	S350 BX1/BR1 Steering Knuckle Pivot Ball Turnbuckle
SW-330399B	S35-3 Series Aluminum Rear Chassis Brace Mount (GM)
SW-330458	S350T Rear Upper Arm Turnbuckle M5x72mm
SW-330557	S350 New BBS System Shock Seal Cap (GM)
SW-330560B	S35 New BBS System Shock Spring Adjust Nut (BK)
SW-330562A	S35 Series BBS System Shock Piston 1.3mmX6 Holes (BK)(2PC)
SW-330563A	S35 Series BBS System Shock Piston 1.4mmX6 Holes (BK)(2PC)
SW-330633	S350 BBS System +5.6mm Shock Body L
SW-330634	S350 BBS System +5mm Shock Body S
SW-330635	S350 New BBS System +5.5mm Shock Shaft (L)
SW-330636	S350 New BBS System +1.3mm Shock Shaft (S)
SW-330661A	S35-T/S35 Series Competition Center Drive Join (5mm Set screw)
SW-330663A	S35-3 Series Steel R-Center Drive Shaft (115mm)
SW-330767A	S35-3 Series Steel F-Center Dive Shaft (88mm)
SW-330777A	S35-4 Series Steering Linkage Ball Stud 7mm(L7)(4PC)
SW-330782	S35-3 Series Rear Hub Carriers Hinge Pin
SW-330822	S35-T Steel Center Rear Drive Shaft 165mm
SW-338011	S35-3 series Pinion Gear Stopper (5x7x5.1mm)(4PC)
SW-338014	S35-3W T-7075AL Rear Lower Fully Adjustable Toe-In Block(3 degree)
SW-338045	S35-T Series HET System Pinion Gear 10T
SW-338046	S35-T Series HET System Crown Gear 46T
SW-338025	S35-4 HET Bevel Gear Shaft (2PC)
SW-338027	S35-4 Front/Rear HET Diff. Outdrive (2PC)
SW-338028	S35-4 Center HET Diff. Outdrive (2PC)
SW-338041	S35-3/4 Series Center HET Spur Gear (48T)
SW-338043	S35-3/4 Series Servo Saver Nut with Screw Fixed
SW-338048	S35-4 Series Servo Saver Shaft(2PC)
SW-338049	S35-4 Series T7 Aluminum Rear Front Lower Suspension Plate (RF)
SW-338051	S35-4 Series T7 Aluminum Steering Knuckle Plate (R=L)

Spare Part List

Item No.	Part Name
SW-338052	S35-4 Series T7 Aluminum Settring Bellcrank Upper Part-A (with 2Hole)
SW-338053	S35-4 Series T7 Aluminum Steering Plate
SW-338056	S35-4 Series Lower Arm Hinge Pin (68.5mm)(2PC)
SW-338057	S35-4 Series T7 Aluminum Front Upper Arm Holder
SW-338058	S35-4 Series T7 Aluminum Front Lower Arm Plate (FF)
SW-338059	S35-4 Series T7 Aluminum Front Lower Arm Holder (FR)
SW-338067	S35-4 Series Emulsion/Bladder 2 Ways Syatem Shock Cap (2PC)
SW-338068	S35-4 Series T7 Aluminum Shock Stud (L)(2PC)
SW-338070B	S35 Series Rear Upper Sus. Arm Ball Stud (7.0mm Hex)
SW-338085	S35-T2/E T7075 Aluminum Front Shock Tower
SW-338086	S35-T2/E T7075 Aluminum Rear Shock Tower
SW-338087	S35-T2 Nitro T7075 Aluminum Lightened Main Chassis
SW-338089	S35-T2/e Steering Linkage Turnbuckle M4x80mm
SW-340016	S35-4 Series Pro-composite Carbon Rear Wheel Hub Adjust Plate (R=L)(2PC)
SW-340017	S35-4 Series Pro-composite Carbon Steering Bellcrank Plate
SW-340028-10	S35-T2/e Pro-composite Carbon Front Upper Arm Cover (1.0mm)(2PC)
SWC-330580	S350 Competition Series Professional Brake Disc
SWC-330647	S350 BBD Special Brake Cam
SW-400002	O-ring S5 4.8X1.5
SW-400005	Shock Spring Adjust Nut O-Ring
SW-400009	Shock Boot (L)
SW-400010	Shock Boot (S)
SW-400019	S350 New BBS System Shock Spring Adjust Nut O-Ring (4PC)
SW-400020	S350 New BBS System Shock Seal O-Ring (4PC)
SW-400023	S35-4 Series BBS System Seal O-Ring for Emulsion Shock Cap (4PC)
SW-400022A-S	S35 Series BBS System Pro Shock Bladder (Soft)(8PC)
SW-410038	Super Silicone Tube 2455x30mm (Transparent)
SW-420010	Antenna Cup
SW-420026	S350/S350T Series Option Air Filter Extension Adapter
SW-510091	SWORKz Origional Logo Sticker (2PC)
SW-540003	SWORKz Cable Straps for 1/8 Buggy Airfilter (10PC)
SW-610004	Air Filter Foam Set
SW-610019	S35-3 Series Servo Saver Spring Dusty Protect Sponge (2PC)
SW-610020	S35-3 Series Center Big Bore Plastic Diff. Case Gasket (3PC)
SW-610023	S35-4 HET Diff. Gasket (0.4T)(4PC)
SW-101004	Washer 3.5X10X0.2mm
SW-101010A	M3 Countersunk Washer (GM)
SW-101011	M2.6x6xT0.6mm
SW-101013	3mm Spring Washer
SW-101015	M5x8xT0.4mm
SW-101016	M5x8xT0.8mm
SW-101018	SHIM 13x16x0.2mm
SW-101019	SHIM 6.0x10.0x0.2mm
SW-101020A	S350 Sries 3mm Countersunk Washers (GM)
SW-101021	M3x8xT0.8mm
SW-101039	SWORKz HET Diff Steel Washer 5x12x0.3mm (10PC)
SW-103001	M3 Nut Lock
SW-103003A	Flange M3 Nut Lock (GM)
SW-103004	M2.5mm Nut Lock
SW-104004	M3x3mm Set Screw
SW-104005	M3x4mm Set Screw
SW-104010	M5x4mm Set Screw (Flat Bottom)
SW-104011	M4x4mm Set Screw (Flat Bottom)
SW-105001	M3x8mm Cap Screw
SW-105005	M3x12mm Cap Screw
SW-105006A	M3x28mm Cap Screw full thread
SW-105007A	M4x8mm I-Head Screw Thin
SW-105013A	M3x25mm Cap Screw
SW-105018	M2x6mm Cap Head Screw
SW-106001	M3x8mm Hex Soket OH/TP Screw
SW-106002	M3x10mm Hex Soket OH/TP Screw
SW-106003	M3x16mm Hex Soket OH/TP Screw
SW-106006	M3x20mm Hex Soket OH/TP Screw
SW-106007	M3x12mm Hex Soket OH/TP Screw (HT)
SW-106008	M3x12mm Hex Soket OH/TP Screw
SW-106009	M3x25mm Hex Soket OH/TP Screw
SW-106013	M2.5x8mm 1.5mmHex Soket OH/ST Screw
SW-106015	M3x5mm Hex Soket OH/TP Screw
SW-106020	M2.5x5mm 1.5mmHex Soket OH/ST Screw
SW-106021A	S35 Series M4x10mm Hex Soket OH/TP Set Screw
SW-108001	M3x12mm FH/ST HEX Screw
SW-108003	M3x10mm FH/ST HEX Screw
SW-108005	M3x14mm FH/ST HEX Screw
SW-108006	M3x8mm FH/ST HEX Screw
SW-108007	M3x6mm FH/ST HEX Screw
SW-108008	M3x35mm FH/ST HEX Screw
SW-108010	M4x10mm FH/ST HEX Screw
SW-108011	M4x12mm FH/ST HEX Screw
SW-108012	M4x16mm FH/ST HEX Screw
SW-108013	M4x8mm FH/ST HEX Screw
SW-108019	M2.6x6mm FH/ST HEX Screw
SW-108029	M2.0x4.6mm FH/ST HEX Screw (1.5mm HexHead)
SW-115003A	SWORKz Tornado Clutch Spring II (1.0mm)
SW-115004A	Servo Saver Spring
SW-115011A	S35-GT Series Pipe Spring (+10mm Longer)
SW-115019	Body Clip

Item No.	Part Name
SW-115098	Brake Pad Spring
SWC-115168	S35 Series Black Competition Rear Shock Spring (L2-Dot)(86X1.6X10.75)
SWC-115170	S35 Series Black Competition Front Shock Spring (S3-Dot)(70X1.6X8.5)
SW-116004R	Ball Bearing 6x10x3mm (Red Rubber Case)(4PC)
SW-116006R	Ball Bearing 8x16x5mm (Red Rubber Case)(10PC)
SW-116009	Ball Bearing M5x8x2.5 ZZ (4PC)
SW-116010R	Ball Bearing 5x10x4mm (Red Rubber Case)(4PC)
SW-116019R	Ball Bearing 5x13x4mm (Red Rubber Case)(4PC)
SW-117003	Flange Ball Bearing 3x6x2.5mm (2PC)
SW-118001-24	S35-T2/T2e Front Sway Bar 2.4mm
SW-118001-26	S35-T2/T2e Front Sway Bar 2.6mm
SW-118002-26	S35-T2/T2e Rear Sway Bar 2.6mm
SW-118002-28	S35-T2/T2e Rear Sway Bar 2.8mm

Option Part List

Item No.	Part Name
SW-2501116	SWORKz High Done Force Wing Set (BK)(Fit S350)
SW-2501116A	SWORKz High Done Force Wing Set (BK)
SW-2501114-4	S35-3/S350 Nitro Series Center Brake Disk Holder
SW-2501126	Ail Filter Set
SW-2501529H	S35/S350 Series Hard Plastic Chassis Brace Set
SW-2503260FO	S353 Series Colorful Plastic Inserts Set (FO)
SW-2503260FY	S353 Series Colorful Plastic Inserts Set (FY)
SW-2503260LB	S353 Series Colorful Plastic Inserts Set (SB)(2 Set)
SW-210079AH	S35-4 Plastic Center Big Bore HET Diff Case (Hard)
SW-210091H	S35-4 Plastic Front/Rear Big Bore HET Diff Case (Hard)
SW-218005	S35-3/4 Series HET Center Big Bore Diff. Set (47T)
SW-218014	S35-T/S35-TE Series HET Diff. Combo Set
SW-228008WH	SWORKz 1/8 Off Road Formula 2.0 Race Wing (WH)
SW-228008FY	SWORKz 1/8 Off Road Formula 2.0 Race Wing (FY)
SW-300049	SWORKz S35-3/S350 Series Rear Stainless Chassis End Protection (2PC)
SW-330006A	Tornado Clutch Shoes (2Set)
SW-330115	Steering Knuckle Pivot Ball Turnbuckle
SW-330116	14mm Knuckle Pivot Ball
SW-330125A	S350 Series Aluminum Rear Upper Sus. Arm Ball Stud (4PC)
SW-330134A	S350 Series Aluminum Shock Ball Stud (4PC)
SW-330136A	S350 Series Aluminum Sway Bar Ball Stud (4PC)
SW-330168A	S35-3 Series Rear Chassis Blance wight 15g (2PC)
SW-330202	S-WORKz Turbo Tornado Fly Wheel Set
SW-330398A	SWORKz S350 Series Pro Wheel Nut (GM)
SW-330420	S350 Series Knuckle Pivot Ball Balance Nut (5.5g) (2PC)
SW-330424	S350 Series Aluminum Wing Holder (RED)
SW-330424B	S350 Series Aluminum Wing Holder (BK)
SW-330424G	S350 Series Aluminum Wing Holder (GM)
SW-330505A	S35 Series Lightened Wheel Hub for 8mm Axil (L6.5mm)
SW-330506A	S35 Series Lightened Wheel Hub for 8mm Axil (L5.0mm)
SW-330564A	S35 Series BBS System Shock Piston 1.5mmX6 Holes (BK)
SW-330565	S350 BBS System Shock Piston 1.3mmX8 Oblique Holes (2PC)
SW-330566	S350 BBS System Shock Piston 1.2mmX8 Oblique Holes (2PC)
SW-330568	S350 Buggy Series Aluminum Center Diff. Mount
SW-330767	S35-3 Series T-7075 Aluminum F-Center Dive Shaft (88mm)
SW-330777B	S35-4 Series Aluminum Steering Linkage Ball Stud 7mm (L7)(4PC)
SW-338070A	S35 Series Rear Upper Arm Aluminum Ball Stud (2PC)
SW-338078-25	SWORKz Uni-Design 2-Way System Aluminum Steering Servo Horn 25T
SW-338078-23	SWORKz Uni-Design 2-Way System Aluminum Steering Servo Horn 23T
SW-338079-25	SWORKz Uni-Design Aluminum Throttle Servo Horn 25T
SW-338079-23	SWORKz Uni-Design Aluminum Throttle Servo Horn 23T
SW-340029-15	S35-T2/e Pro-composite Carbon Front Lower Arm Cover (1.5mm)(2PC)
SW-340030-15	S35-T2/e Pro-composite Carbon Rear Lower Arm Cover (1.5mm)(2PC)
SW-400022A-M	S35 Series BBS System Pro Shock Bladder (Medium)(8PC)
SW-400024S	S35 Series BBS System Hex-Cell Shock Bladder(Soft)(4PC)
SW-410023	Air Filter Adapter
SWC-115107	S350 Competition Shock Spring A-2 (75X1.4X7.25)(Red)
SWC-115109	S350 Competition Shock Spring B-2 (90X1.4X8.5)(Pink)
SWC-115110	S350 Competition Shock Spring C-1 (75X1.5X7.75)(SkyBlue)
SWC-115118	S350 Competition Shock Spring E-3 (90X1.5X8.5)(Blue)
SW-115026A	SWORKz Tornado Clutch Spring II (1.1mm)(GR)
SW-115027A	SWORKz Tornado Clutch Spring II (1.2mm)(GD)
SW-115077A	SWORKz Tornado Clutch Spring II (0.9mm)(BK)
SW-116006A	High Performance Rubber Cover Ball Bearing 8x16x5mm (10PC)
SW-116010B	High Performance Ball Bearing 5x10x4mm (coffee)(4PC)
SW-116019C	SWORKz High Performance 5x13x4mm Ball Bearing (Rubber Case)(4PC)
SWC-116006C	SWORKz Competition 8x16x5mm Ball Bearing (Metal Case)(6PC)
SWC-116010C	SWORKz Competition 5x10x4mm Ball Bearing (Metal Case)(6PC)
SWC-116019A	SWORKz Competition 5x13x4mm Ball Bearing (Metal Case)(4PC)
SWC-116019B	SWORKz Competition 5x13x4mm Ball Bearing (Metal Case/Japan)(4PC)
SWC-210088	S35-3 Nitro Series Pro-composite Carbon One Unit Radio Tray Set
SWC-338006	SWORKz Tornado Hi-Performance Lightened Clutch Bell (13T)
SW-338036	SWORKz 1/8 Nitro Series Pipe Spring Lock (1 Set)
SW-338075	S35-4 Series T7 Aluminum Rear Wheel Hub (R=L)(2PC)
SWC-218020-6LD	S35 Series 1-Unit-Fit Aluminum Engine Mount Set (6 Degree Lay-Down)
SWC-218020-4LD	S35 Series 1-Unit-Fit Aluminum Engine Mount Set (4 Degree Lay-Down)
SWC-338095	S35 Series 1-Unit-Fit Aluminum Engine Mount (6 Degree Lay-Down)
SWC-338096	S35 Series 1-Unit-Fit Aluminum Engine Mount (Upper)(2PC)
SWC-338097	S35 Series 1-Unit-Fit Aluminum Engine Mount (4 Degree Lay-Down)
SWC-115163	S35 Series Black Competition Front Shock Spring (M4-Dot)(75X1.6X8.75)
SWC-115164	S35 Series Black Competition Front Shock Spring (M3-Dot)(75X1.6X9.0)
SWC-115165	S35 Series Black Competition Front Shock Spring (M2-Dot)(75X1.6X9.25)
SWC-115166	S35 Series Black Competition Rear Shock Spring (L4-Dot)(86X1.6X10.25)
SWC-115167	S35 Series Black Competition Rear Shock Spring (L3-Dot)(86X1.6X10.5)
SWC-115169	S35 Series Black Competition Front Shock Spring (S4-Dot)(70X1.6X8.25)
SWC-115171	S35 Series Black Competition Front Shock Spring (S2-Dot)(70X1.6X8.75)
SWC-115190	S35 Series Competition Black Line Rear Shock Spring (RM4-Dot)(80X1.6X9.75)
SWC-115191	S35 Series Competition Black Line Rear Shock Spring (RM3-Dot)(80X1.6X10.0)
SWC-115192	S35 Series Competition Black Line Rear Shock Spring (RM2-Dot)(80X1.6X10.25)
SW-118001-25	S35-T2/T2e Front Sway Bar 2.5mm

Item No.	Part Name
SW-118001-27	S35-T2/T2e Front Sway Bar 2.7mm
SW-118002-27	S35-T2/T2e Rear Sway Bar 2.7mm
SW-118002-30	S35-T2/T2e Rear Sway Bar 3.0mm

Shock Absorbers

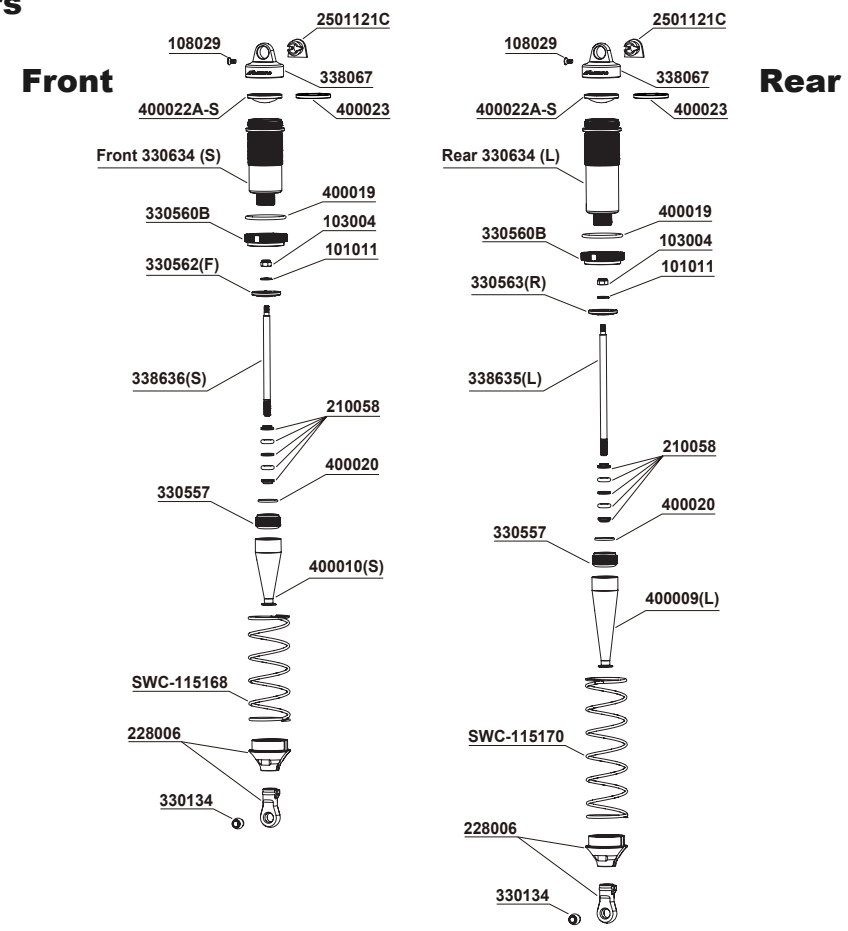

Differential

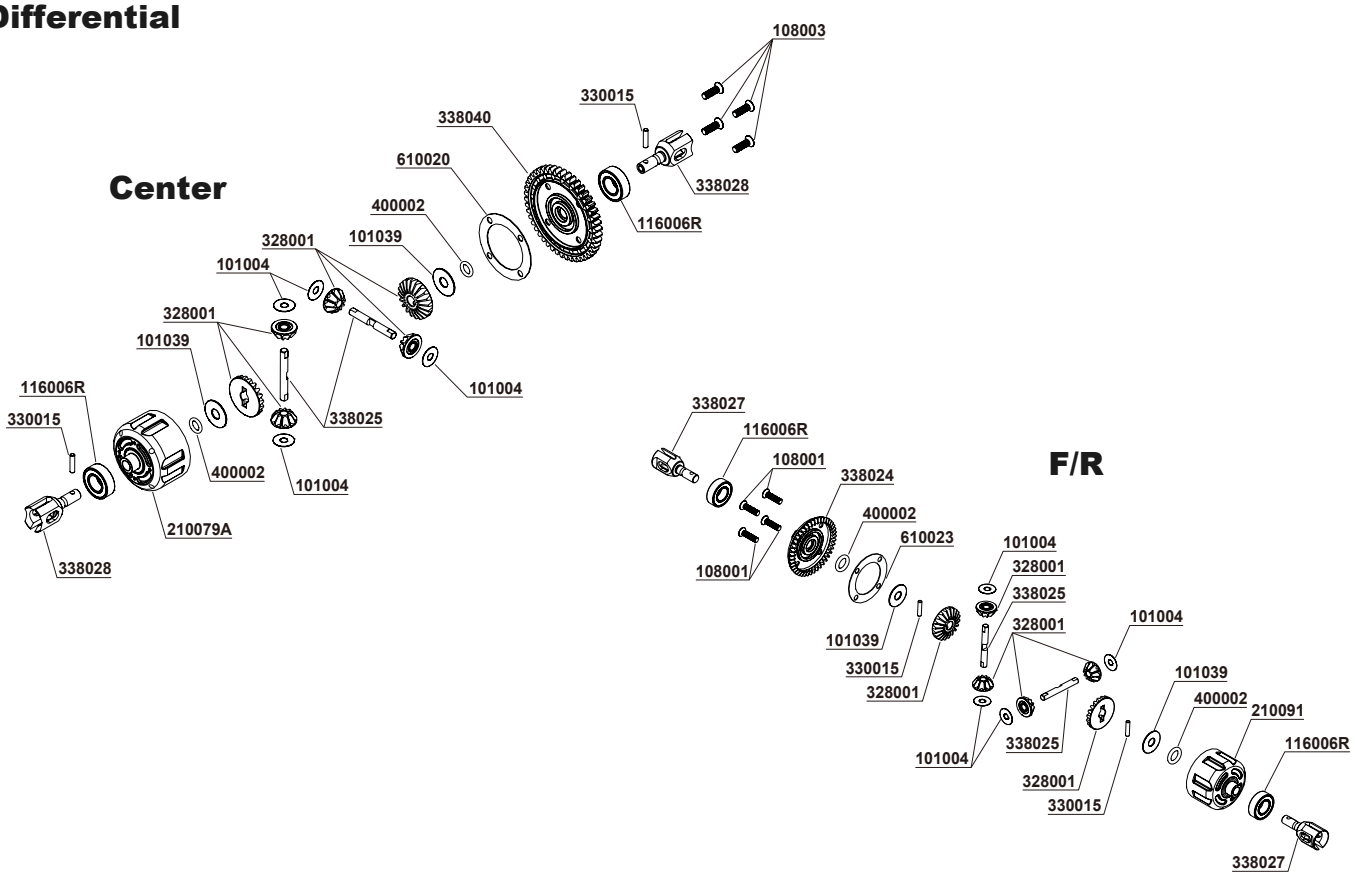

Front Suspension

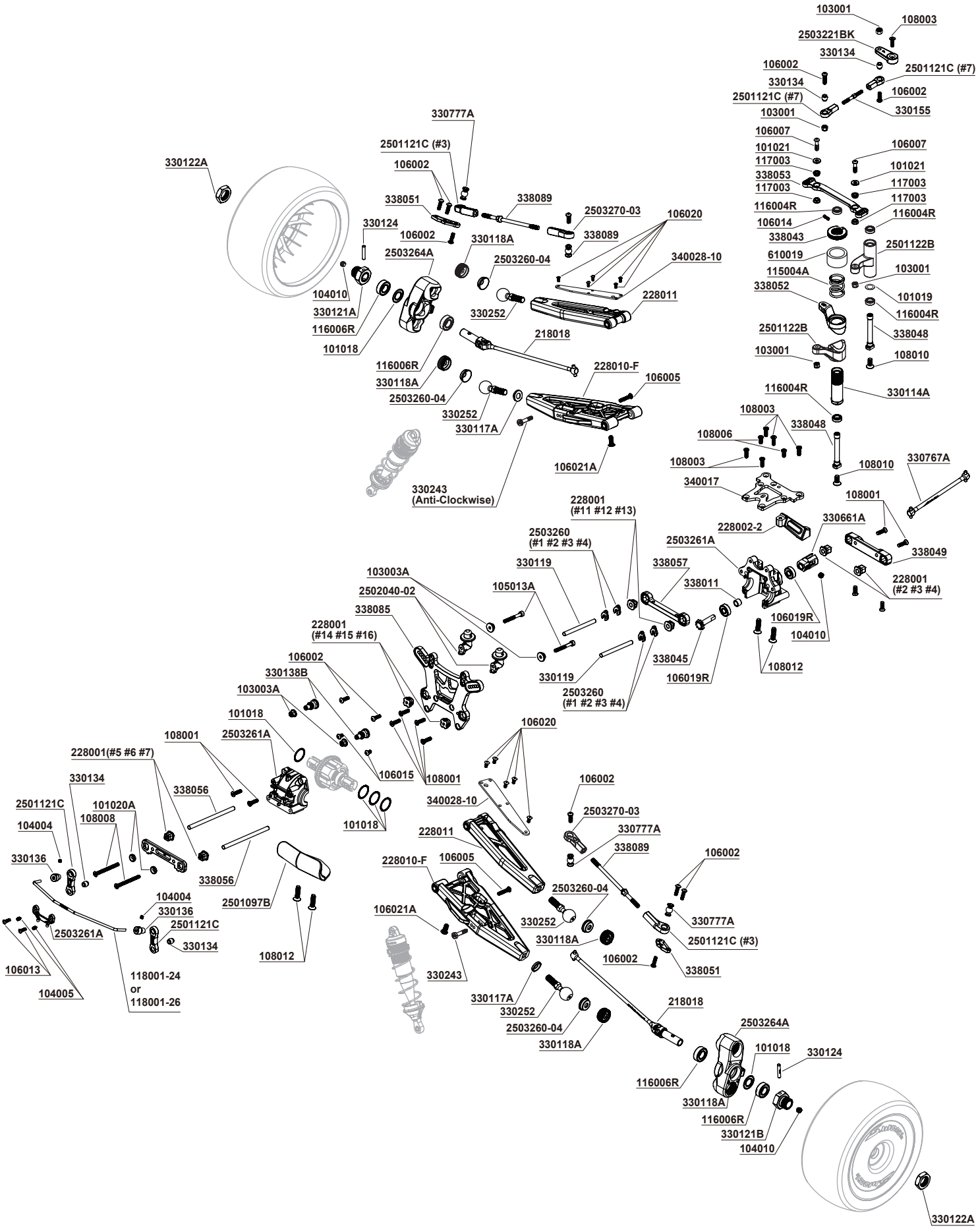

Center Transmission

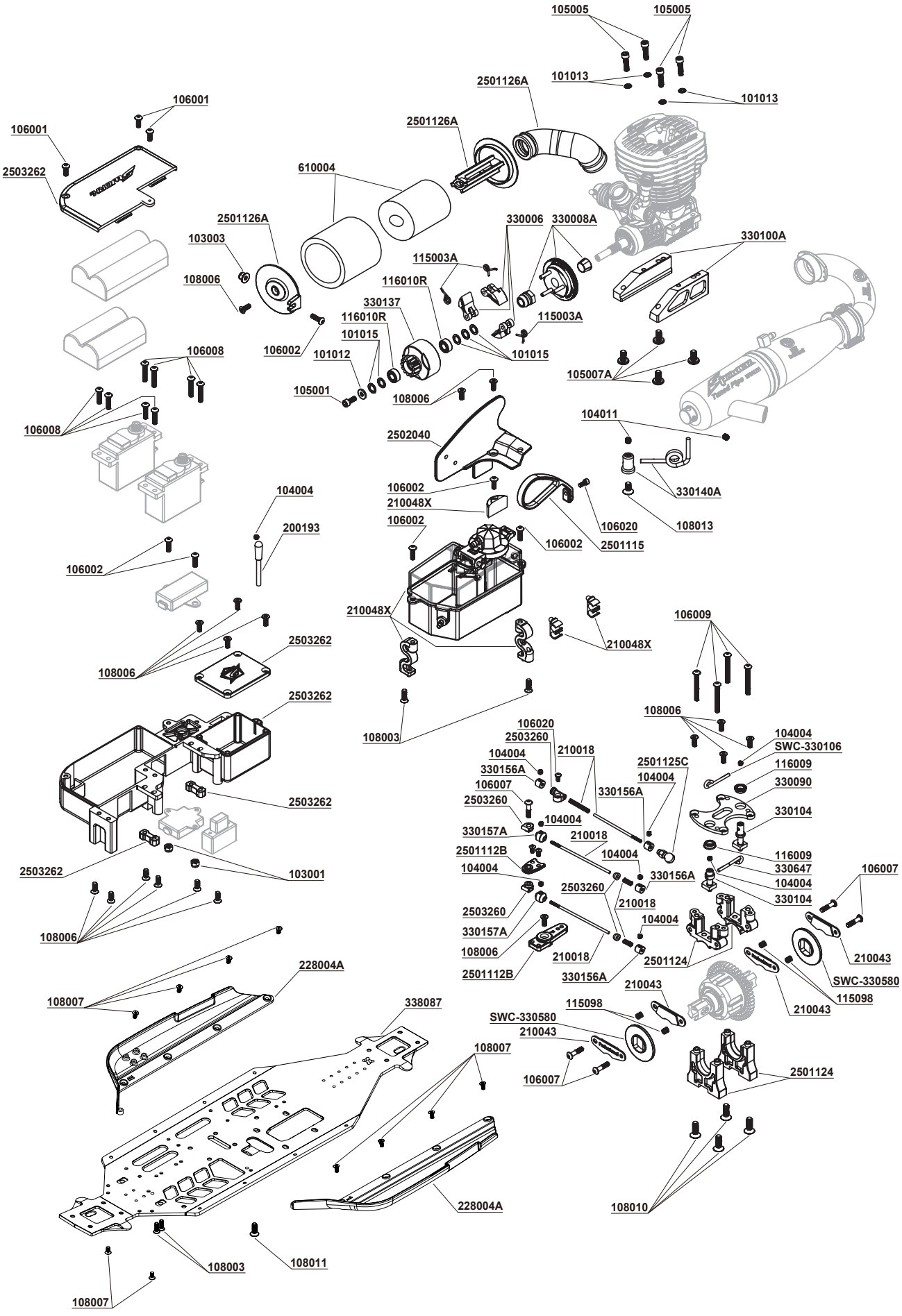

Rear Suspension

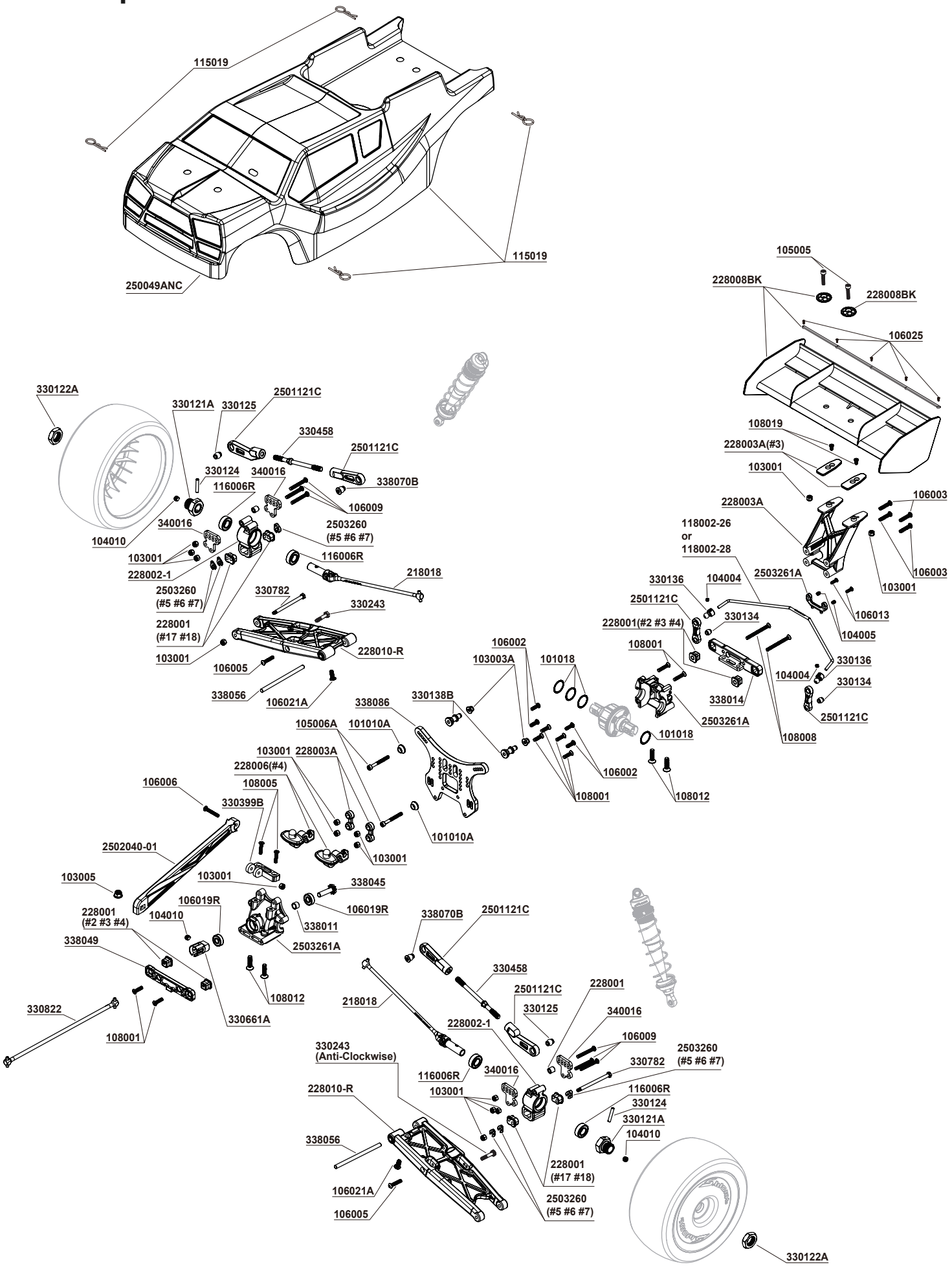

S35-T2

1/8 OffRoad Nitro Power Pro Truggy



SPEEDMASTER HOBBY CO., LTD.

TEL: +886-3-538-7638

FAX: +886-3-538-7328

No.42, Ruiguang St., Xiangshan Dist.,

Hsinchu City 300, Taiwan (R.O.C.)

www.sworkz.com

508006-N

Production No. 39120206