S35-T2e

1/8 OffRoad Brushl[illegible] Truggy



SWORKz S35-T2e INSTRUCTION MANUAL

S35-T2e

1/8 OffRoad Brushless Power Pro Truggy

INSTRUCTION

The SWORKz S35-T2e 1/8 Electric Truggy is designed for pure racing. The geometry of the car provides great corner speed with exceptional traction and easy driving control.

The S35-T2e features a T7075 hard anodized and lightened aluminum wide layout chassis that was tested by our factory pilots to guarantee best performance.

The newly developed Truggy HET differentials are included and provide traction that was not possible before.

The new S35-T2e comes with a longer shock layout in the front and rear. The construction of the shocks is adapted to that new optimized layout. The smart holder for shock spring plates makes it almost impossible to lose them anymore.

The steering geometry, with new Ackerman and steering plates, gives the driver a feeling of total control over the SWORKz S35-T2e.

With the new toe-in plates, which now contain square inserts, you can adjust the geometry of your SWORKz S35-T2e to fit every track layout and track condition. The lower arms are made of a newly developed composite material and fit perfectly to the new chassis. Side guards were redesigned as well.

With the new lightened wing support you can adjust various positions and the angle of the wing to give your SWORKz S35-T2e the best stability on the track. Together with the "Speed Rhinoceros III" body shell, perfect aerodynamics is achieved.

Another new development in our SWORKz S35-T2e is the totally new rear hub. Made from composite materials combined with 2 carbon plates gives you the possibility for various setups.

The new designed Motor mount makes it possible to change the motor or adjust the play of the gears very easily.

There are many changes and smart ideas put into your new SWORKz S35-T2e that makes the car a real winner.

The secret of a modern racing car is the possibility to adapt the setup to every track for top pilots but also have a standard setup that works on most tracks for hobby pilots.

The SWORKz S35-T2e represents these two characteristics in perfection.

The SWORKz development team focused on using materials corresponding to the highest quality standards when designing the car. You will find only 100% SWORKz quality in the S35-T2e kit.

Congratulations on your purchase of the new SWORKz S35-T2e 1/8 scale off-road racing Truggy pro kit and thanks for trusting in SWORKz.

Please read this manual carefully, before you start to build and drive your SWORKz S35-T2e. This manual contains step-by-step instructions to helping you completing, preparing and fine tuning your Truggy for racing. Updates, setups, and product news will be posted on all SWORKz digital media.

As always, if you should ever have any questions or need help with your SWORKz products, please feel free to contact our official SWORKz dealers and distributors.

S35-T2e Kit Features:

- New T7075 Hard Anodized, Lightend Aluminium Chassis
- New Wide Chassis Design
- New Design Shock Towers
- New Shock Caps
- New Fixed Shock Spring Holder
- New 3mm Updated Rear Shock Studs
- New Ackerman Plate
- New Steering System
- New Servo Saver Aluminium Part
- New Servo Saver Fixable Nut
- New Servo Saver Plate
- New Servo Saver Post Locking Design
- New Steering Balls
- New Steering Knuckle Plates
- New Updated Toe-In Plates with Square Inserts
- New Lightweight Wing Mount
- New Side Guards
- New Lower Front and Rear Arms
- New Front Upper Arms
- New Body Posts Front and Rear
- New Composite Rear Hubs with Carbon Plates
- New Multi Adjustable Ball System for Rear Upper Arms
- New Anticlock Screws for Shocks
- New Easy Change Motor Mounting Plate
- 3 HET Differentials Included
- New Front and Rear Universal Cross Drive Shafts
- 2 Front Chassis Braces Included
- Black Competition Shock Springs Included
- Adjustable Wing Position
- Adjustable Wing Angle

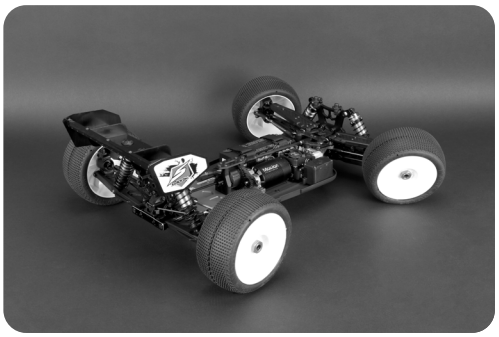

Specification	
Length:	560mm
Width:	410mm
Height:	230mm
Ground Clearance:	80mm
Wheelbase:	375-380mm
Track:	F:366mm /R:368mm
Gear Ratio:	C:48/13T, F/R:46/10T
Weight:	4230g (Race condition)

WARRANTY

Your SWORKz S35-T2e kit warranty covers workmanship and manufacturing defects of the original and unmodified parts. Warranty claims resulting from crashes, abuse, improper operation, improper mounting, improper adjustment or lack of maintenance will not be honored.

Contact your local hobby shop or SWORKz distributor for all claims and questions. Claims must be well documented. All Claims are subject to expert examination approval by SWORKz.

www.sworkz.com

INSTRUCTION	2
Warranty	3
INDEX	4
Required Equipment for Operation	5
Operation Guide	6
Assembly Steps	7-34
Set-up Sheet	35
Blank Set-up Sheet	36
S35-T2e Key No.List	37
S35-T2e Spare Part List	38
S35-T2e Option Part List	39
Explosion view with spare parts number	40-43
End cover	44



This radio controlled racing car is not a toy!

This high-performance R/C model is recommended for ages 14 and older.

Required Equipment for Operation

Radio Gear

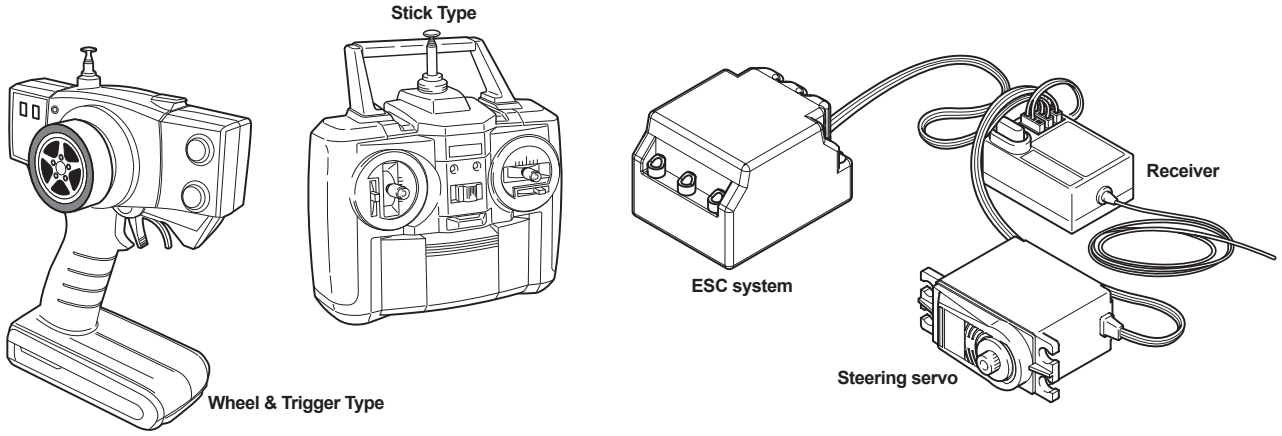

Brushless Motor

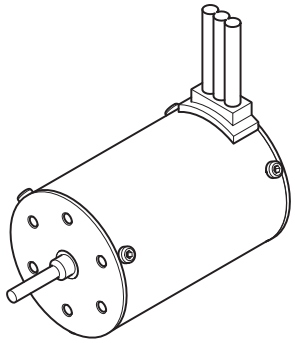

Charger and LiPo Battery

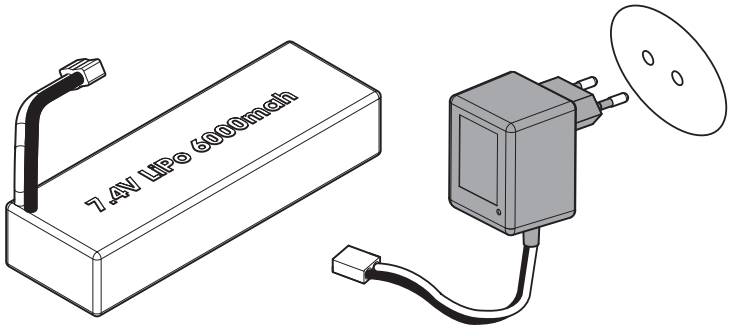

Tools Recommended

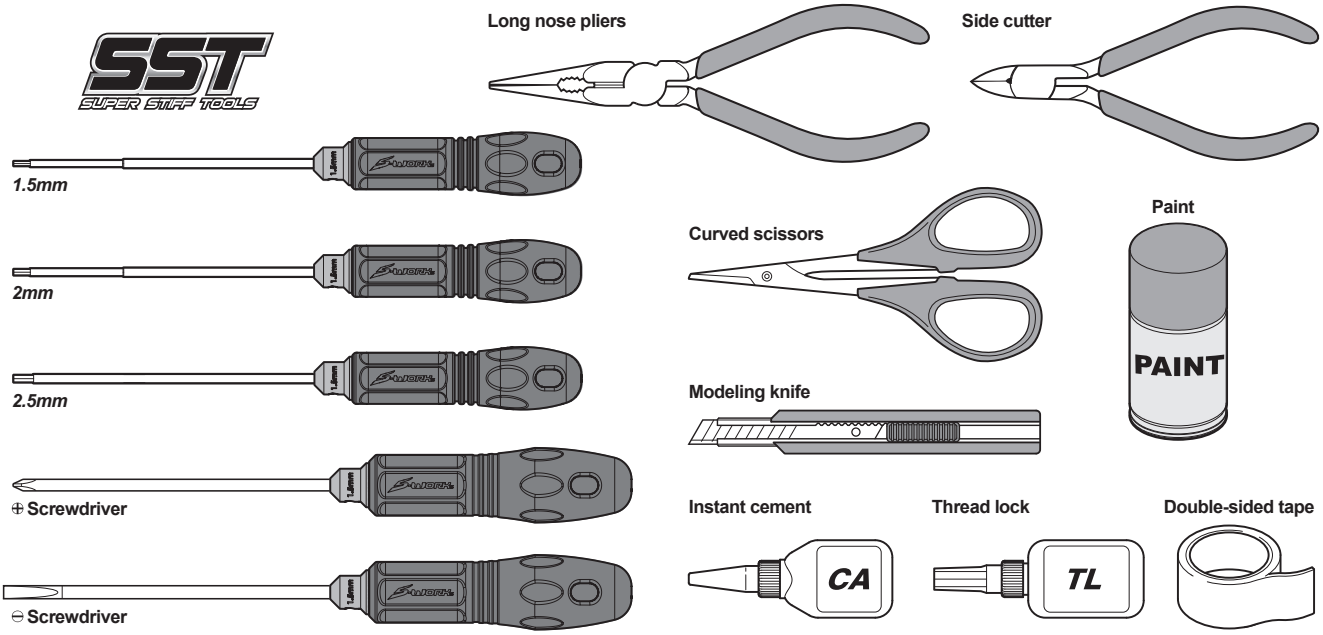

Included items

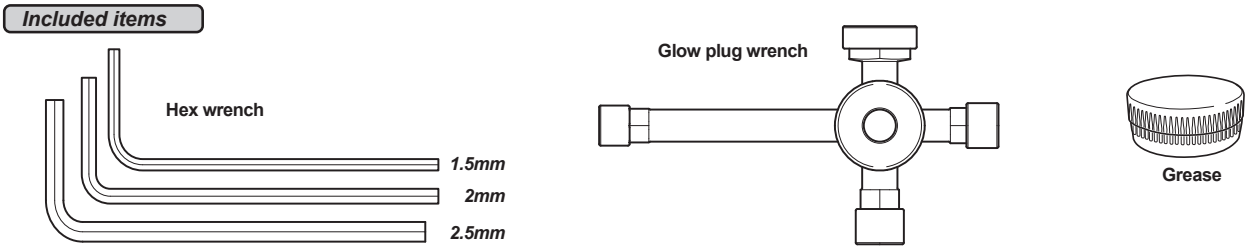

Operation Guide



Assemble front and rear

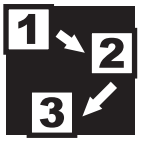

Assemble in the specified order



Assemble both left and right sides



Assemble for 2 sets



Assemble for 4 sets

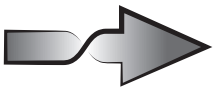

overturn



Thread Locking Compound



Grease

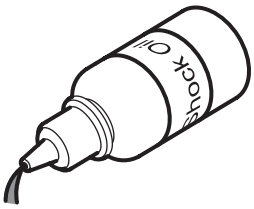

Pure Silicone Oil



Air filter oil

Safety Precautions

The SWORKz S35-T2e is a high performance radio controlled model which needs to be operated with caution and common sense.
The S35-T2e Pro Kit is not intended for children under the age of 14 without adult supervision. SWORKz shall not be held liable for any loss or damages, whether direct, indirect, act of nature, arising from the abuse or misuse of this product or any other product required while operating this model.
- The LiPO Battery can be dangerous is improperly handled.
- Always keep your LiPO Battery in a cool area and never use near flame, sparks, or while smoking.
- Keep your LiPO Battery, and all other flammables, out of the reach of children.
- After running your car, all parts of the Motor and ESC can become extremely hot. Be careful not to touch these parts.
- This model is controlled by your radio and that is vulnerable to interference from many outside sources. This interference can cause a loss of control so it is necessary to operate this model in an open area to avoid personal, or property damage. Always ensure turning on your radio first.
- Keep all the products included in the package out of reach of children.
- This model contains many fast rotating parts. Never touch them during operation.
- Follow the instruction included with your radio gear.
- Never operate your model near people or property. The speed of this model has the potential for injury and or damage to people and or property.
- Always use original SWORKz spare and option parts.
- Always encure the buggy is in proper working condition before use.
- Always exercise caution when using any and all tools.

BAG B

330015
Pin M2.2x9.9mm ***x4***

400002
O-ring S5 4.8X1.5 ***x4***

101039
Washer 5x12x0.3 ***x2***

116006R
Ball Bearing 8x16x5mm (Red Rubber Case) ***x4***

1 F R x2

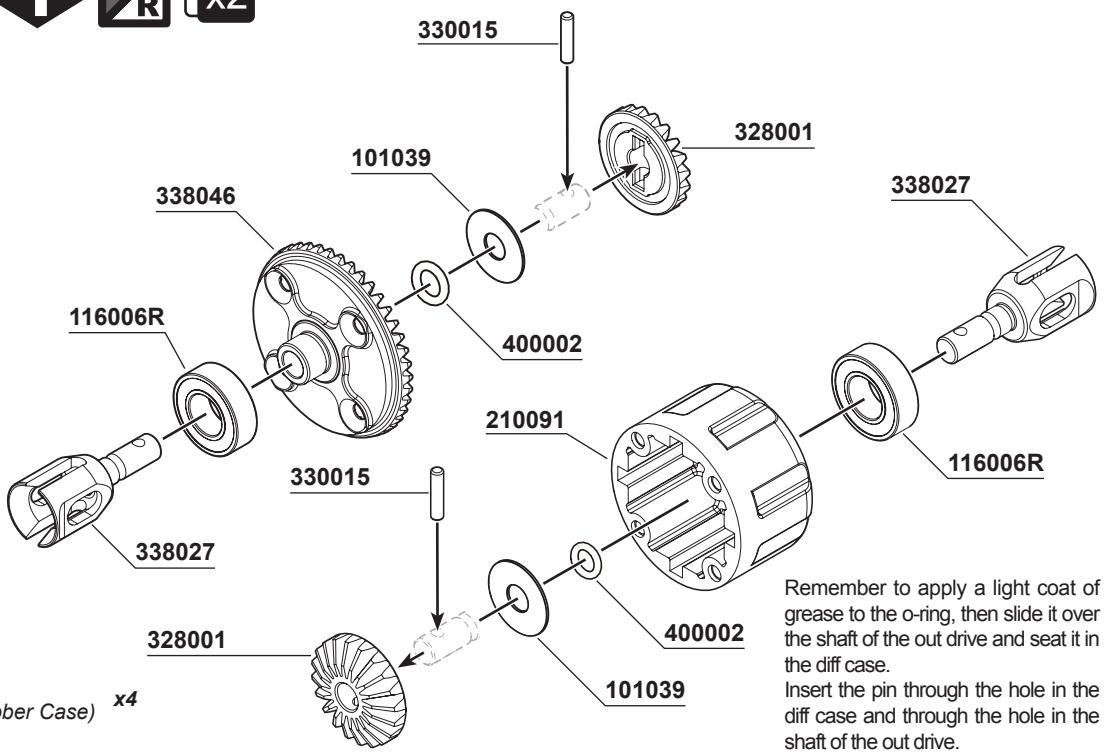

Remember to apply a light coat of grease to the o-ring, then slide it over the shaft of the out drive and seat it in the diff case.
Insert the pin through the hole in the diff case and through the hole in the shaft of the out drive.

2 F R x2

108003
M3x10mm FH/ST HEX Screw ***x8***

338025
S35-3W Bevel Gear Shaft ***x4***

101004
Washer 3.5X10X0.2mm ***x8***

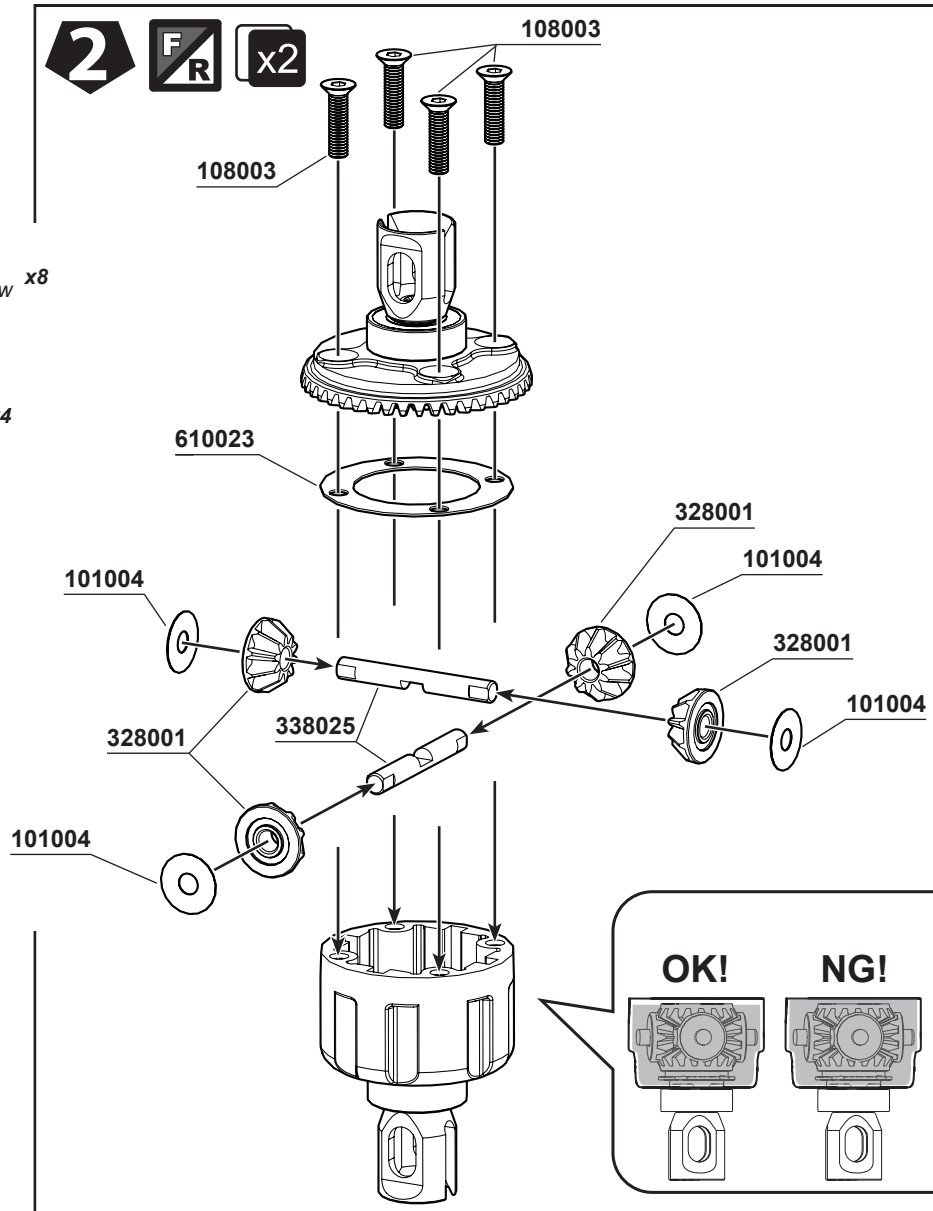

Fill the differentials with oil up to 80% above the satellite gears.
Put the SWORKz Diff. Oil 7000cps for the front Diff. and 3000cps for the rear Diff.

BAG C

330015
Pin M2.2x9.9mm x2

400002
O-ring S5 4.8X1.5 x2

116006R
Ball Bearing 8x16x5mm (Red Rubber Case) x2

101039
Washer 5x12x0.3 x2

3

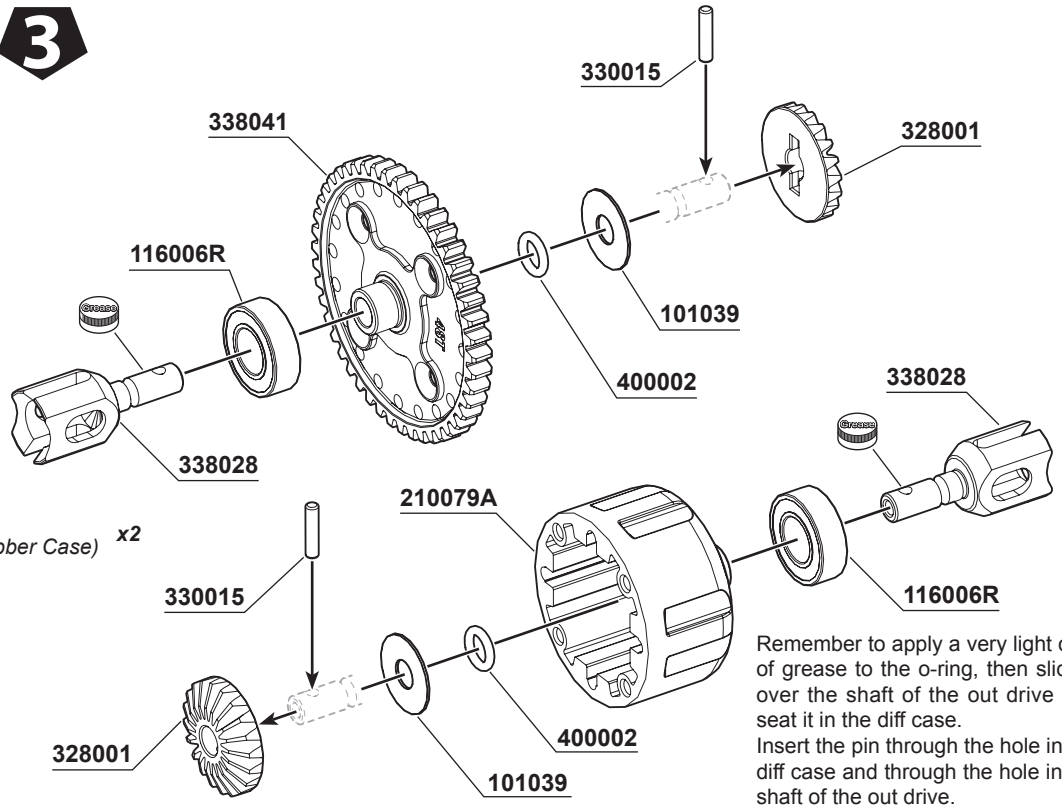

Remember to apply a very light coat of grease to the o-ring, then slide it over the shaft of the out drive and seat it in the diff case.
Insert the pin through the hole in the diff case and through the hole in the shaft of the out drive.

108001
M3x12mm FH/ST HEX Screw x4

338025
S35-3W Bevel Gear Shaft x4

101004
Washer 3.5X10X0.2mm x4

4

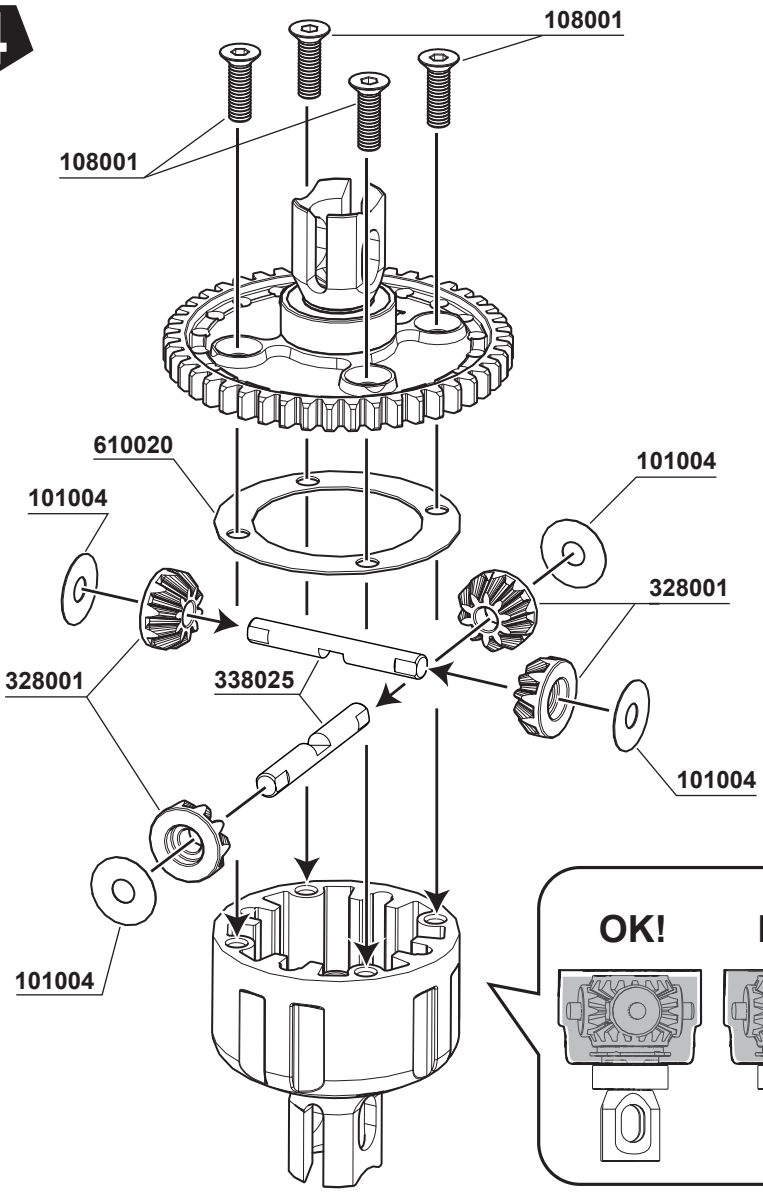

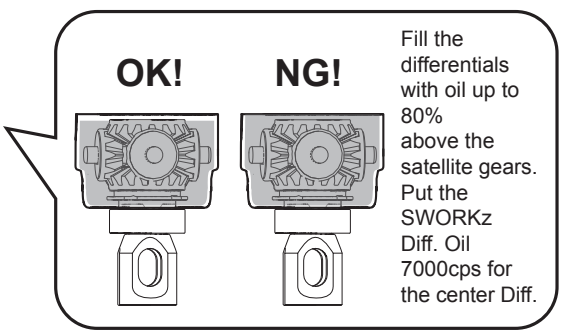

Fill the differentials with oil up to 80% above the satellite gears. Put the SWORKz Diff. Oil 7000cps for the center Diff.

BAG D

5 Front

Pro Tip:
Before installing the M5x4 set screw (104010),
remember to clean the set screw and center driver joint (330661A) first.
Then apply TLC on the set screw.

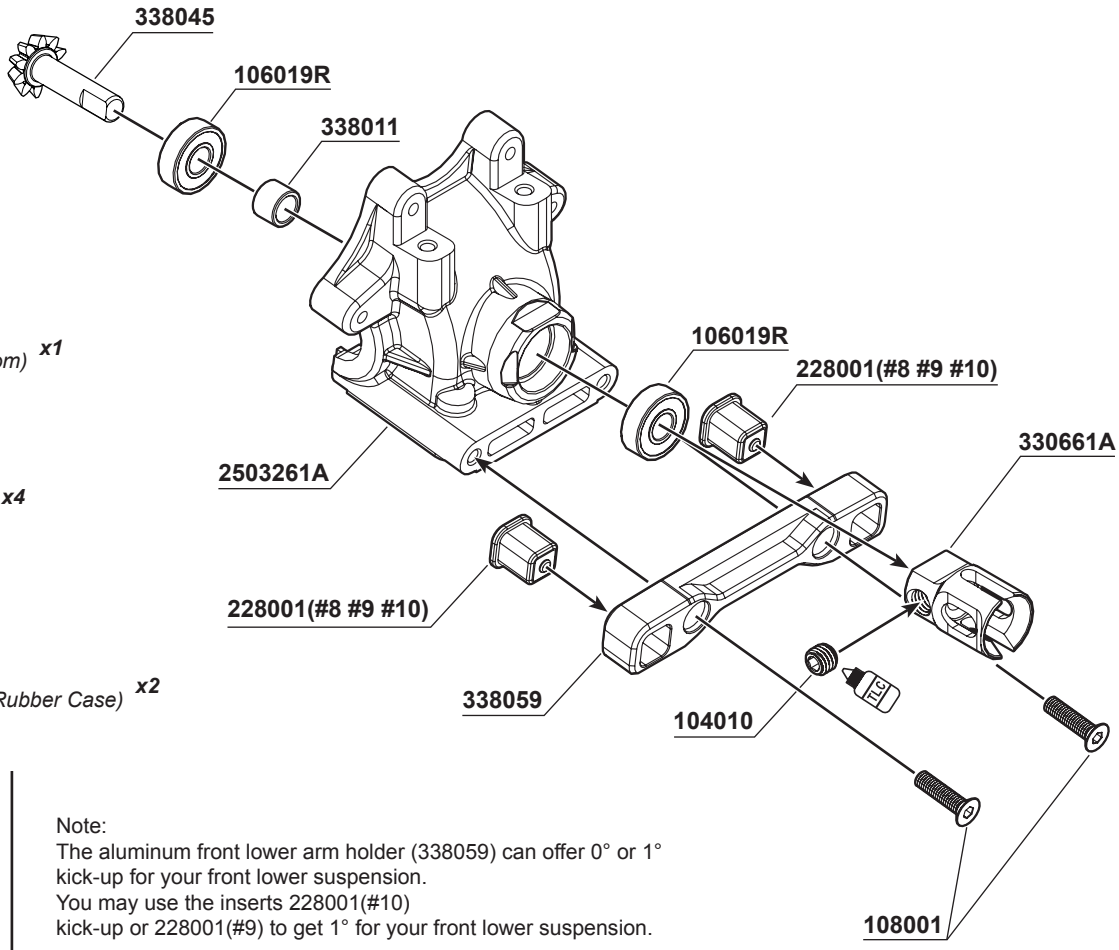



104010
M5x4mm Set Screw (Flat Bottom) ***x1***



108001
M3x12mm FH/ST HEX Screw ***x4***



116019R
Ball Bearing 5x13x4mm (Red Rubber Case) ***x2***

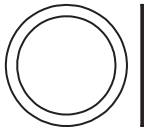

101018
SHIM 13x16x0.2mm ***x4***

Note:
The aluminum front lower arm holder (338059) can offer 0° or 1°
kick-up for your front lower suspension.
You may use the inserts 228001(#10)
kick-up or 228001(#9) to get 1° for your front lower suspension.



338011
S35 series Pinion Gear Stopper (5x7x5.1mm) ***x1***

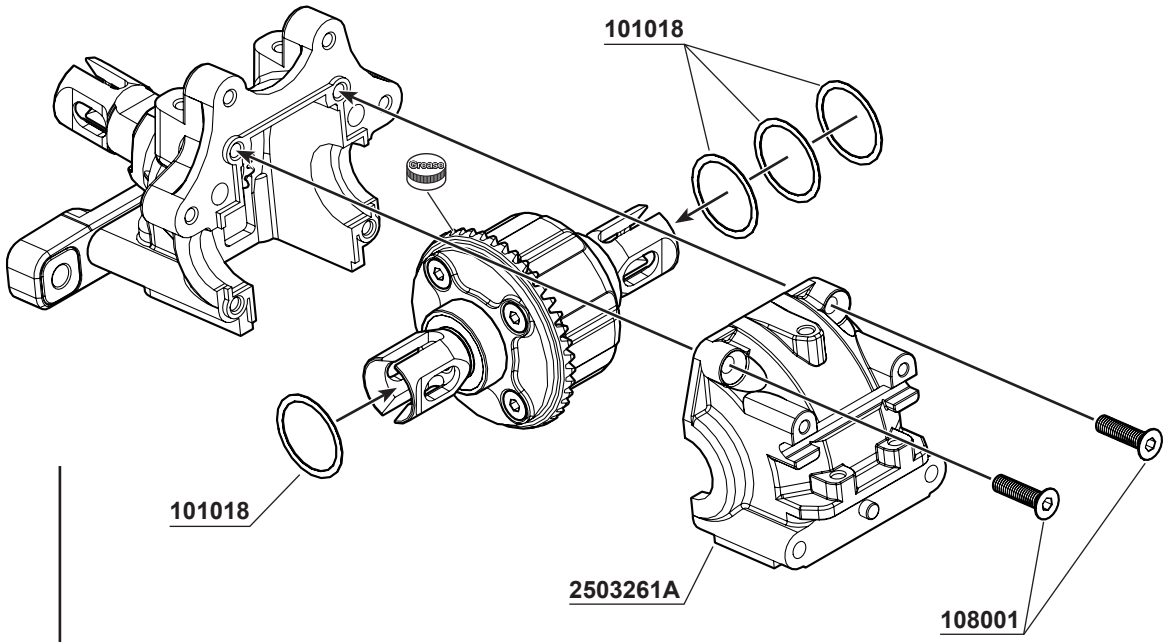

Note:
101018SHIM 13x16x0.2mm
Please use 13x16x0.2mm shims to adjust the play between the crown gear and pinion gear.
Standard suggestion is 1pc shim on the diff crown gear side and 3 pcs on the other side.

BAG D

6 Rear

Pro Tip:
Before installing the M5x4 set screw (104010), remember to clean the set screw and center driver joint (330661A) first. Then apply TLC on the set screw.



108001
M3x12mm FH/ST HEX Screw ***x4***



104010
M5x4mm Set Screw (Flat Bottom) ***x1***



116019R
Ball Bearing 5x13x4mm (Red Rubber Case) ***x2***

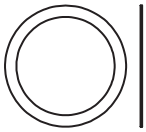

101018
SHIM 13x16x0.2mm ***x4***



338011
S35 series Pinion Gear Stopper (5x7x5.1mm) ***x1***

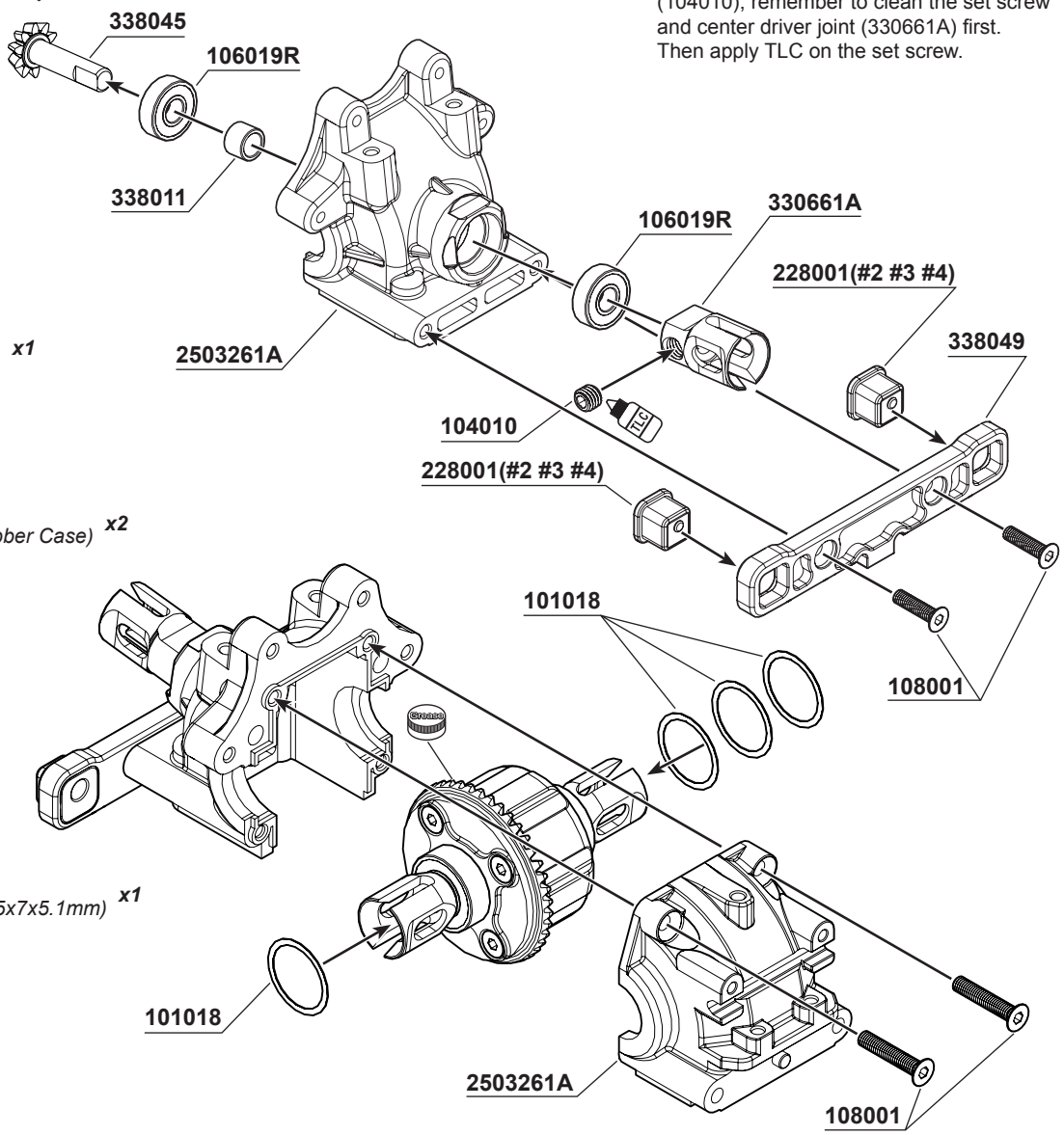

BAG E1

7 L R x2



106005
M3x15mm Hex Socket OH/TP Screw ***x2***



106021A
M4x10mm Hex Socket OH/TP Screw ***X2***

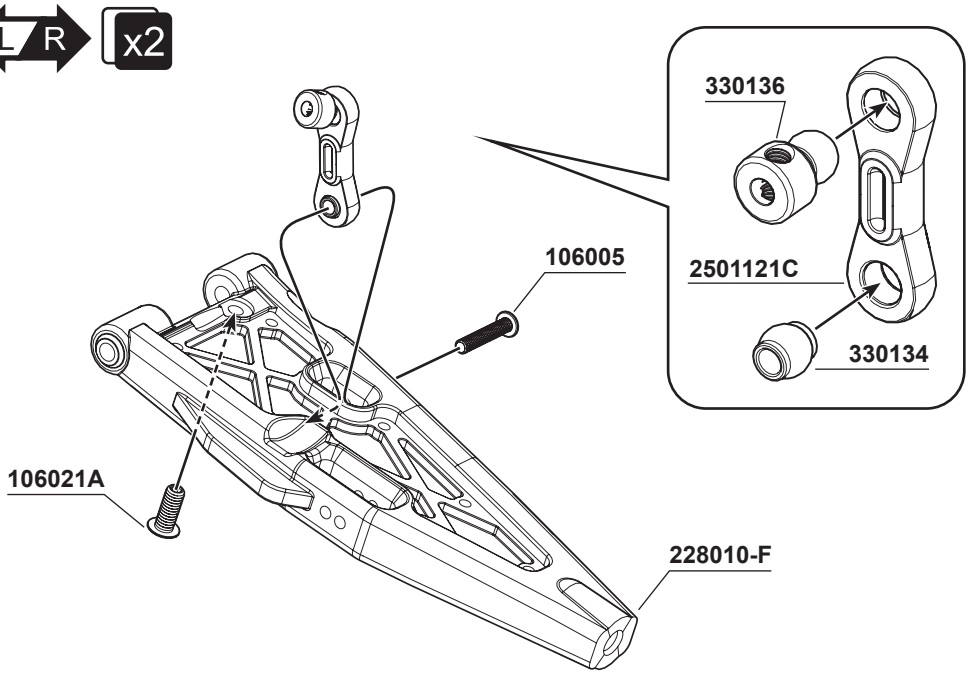

BAG E1 8

338056
S35-4 Series Lower Arm Hinge Pin (68.5mm) x2

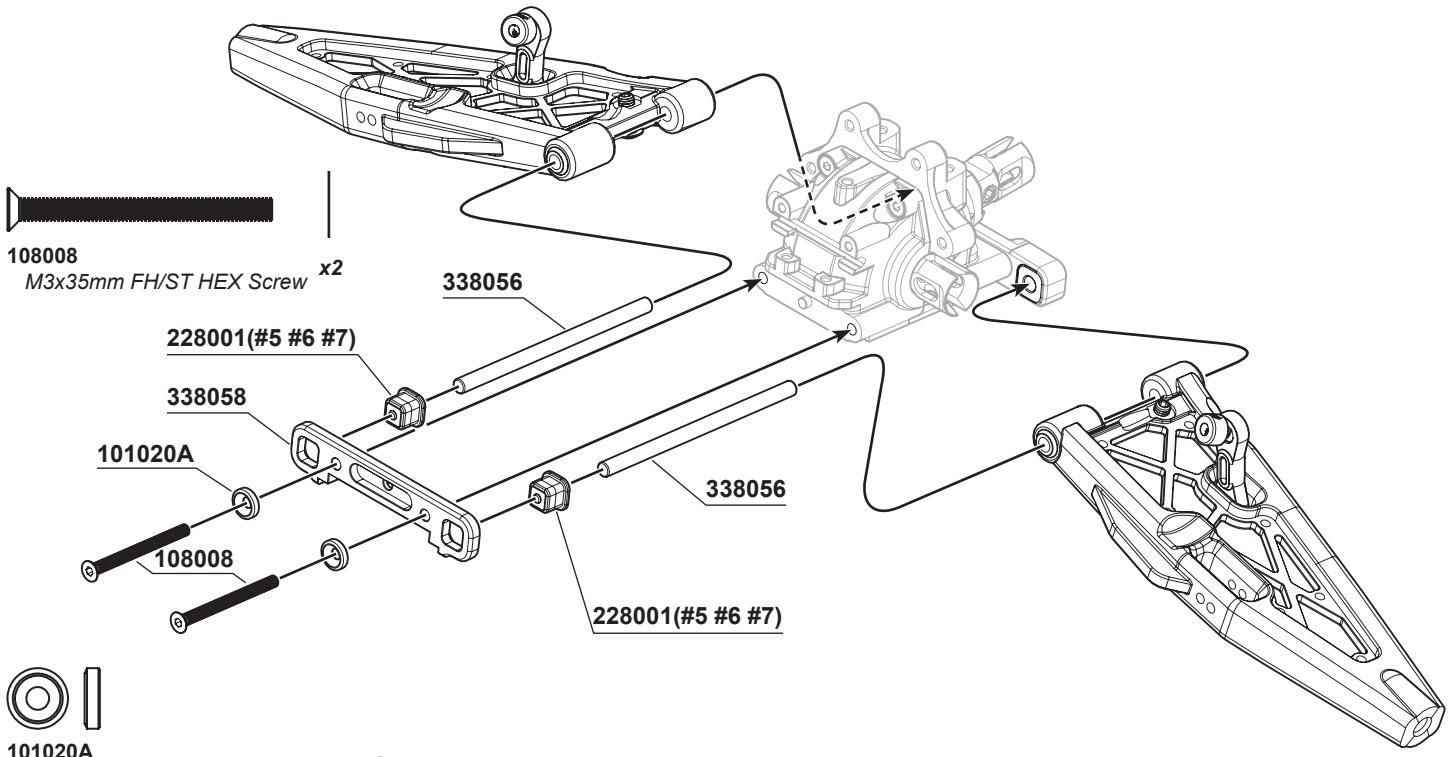

101020A
3mm Countersunk Washers (GM) x2

9

104004
M3x3mm Set Screw x2

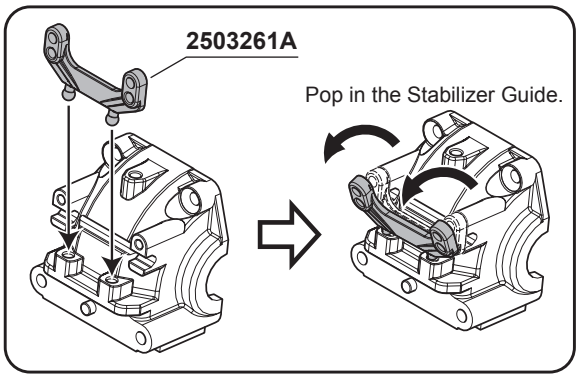

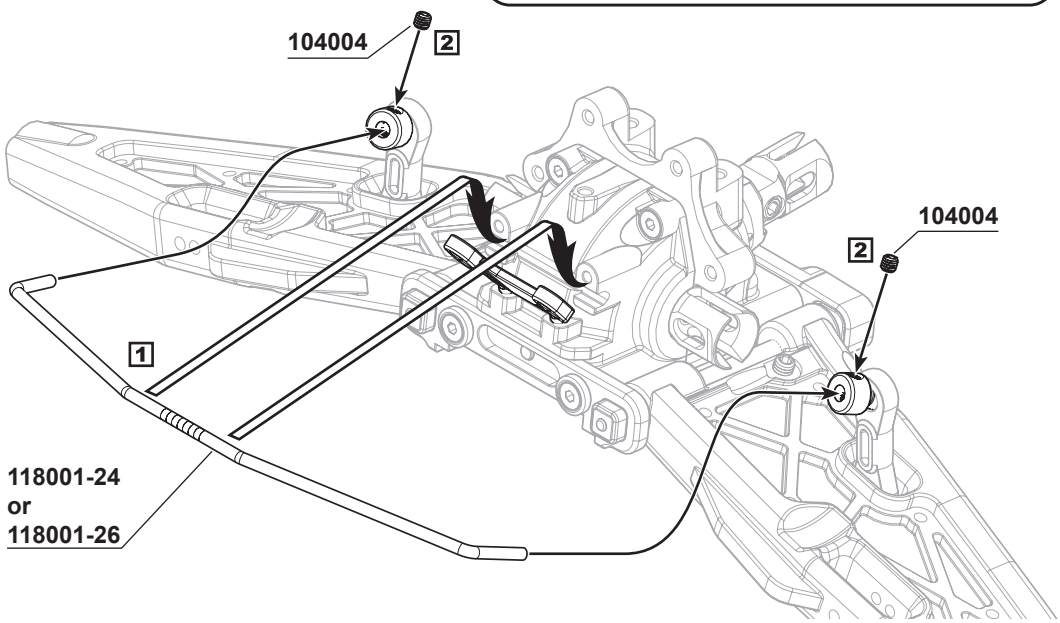

10

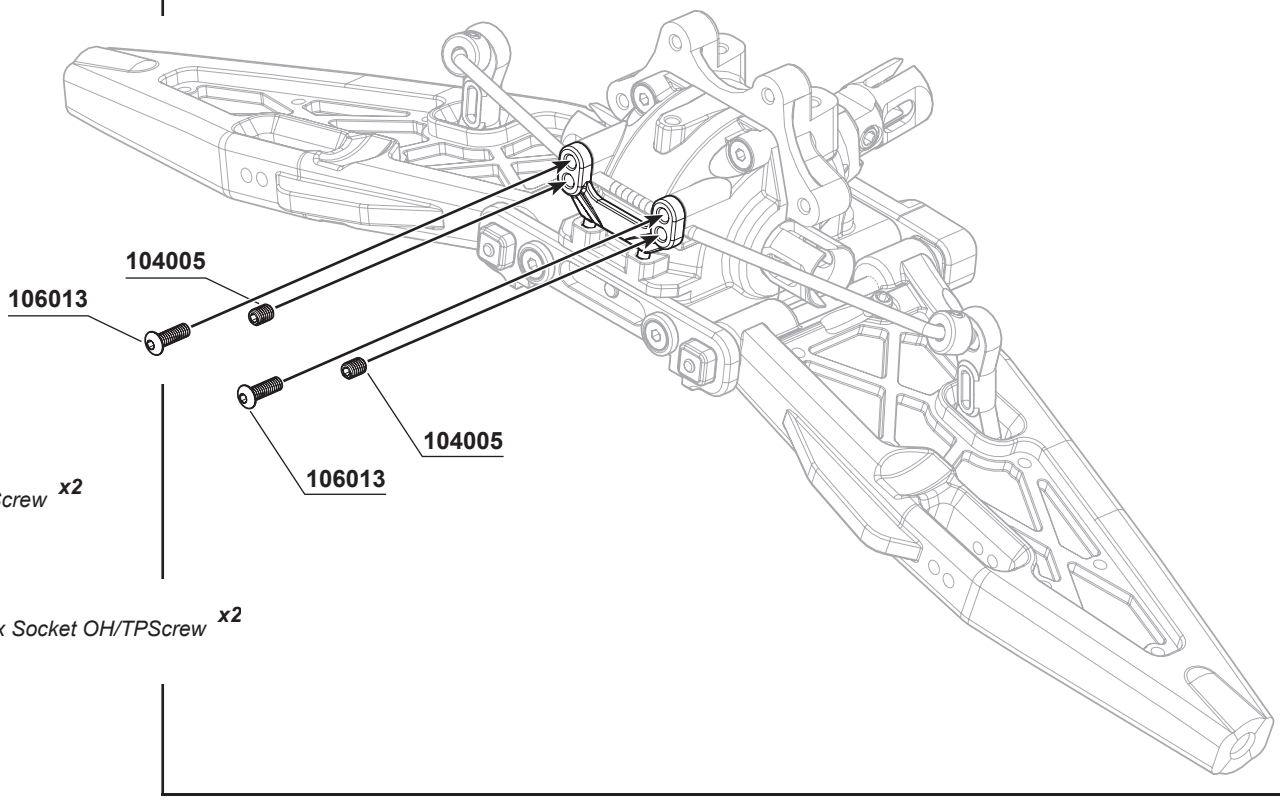

104005
M3x4mm Set Screw x2

106013
M2.5x8mmH ex Socket OH/TPScrew x2

11 L R x2

Note:
The aluminum front upper arm holder (338057) can offer either 0° or + -1° kick-up for your front upper arm suspension.
You may use the inserts 228001(#13) to get 0° kick-up or 228001(#12) to get +-1° for your front upper suspension.

108003
M3x10mm FH/ST HEX Screw x2

108006
M3x8mm FH/ST HEX Screw x2

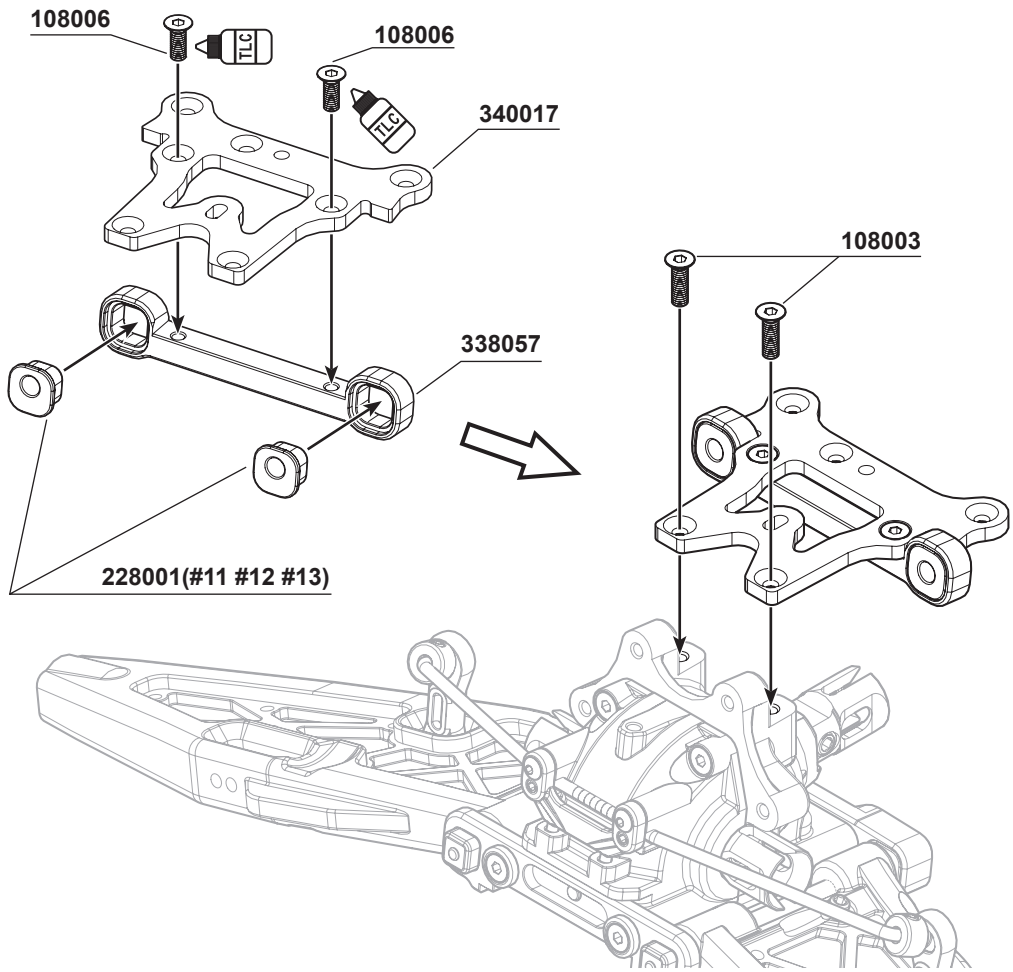

BAG E1

12 L R x2

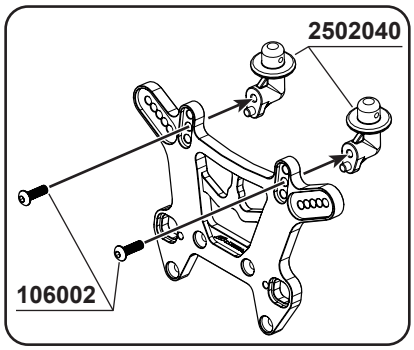

PRO TIP:
The S35-4 Front Upper Arm Adjust Inserts can give different steering adjustments (Ackerman). Put all inserts behind the front upper arms, you will get faster steering response. Otherwise put all inserts in front of the upper arms, you will get more stable steering response. Try to use 2503260-1 or 2503260-3 to adjust the front upper arm position.



108001
M3x12mm FH/ST HEX Screw ***x4***



106015
M3x5mm Hex Socket OH/TP Screw ***x2***

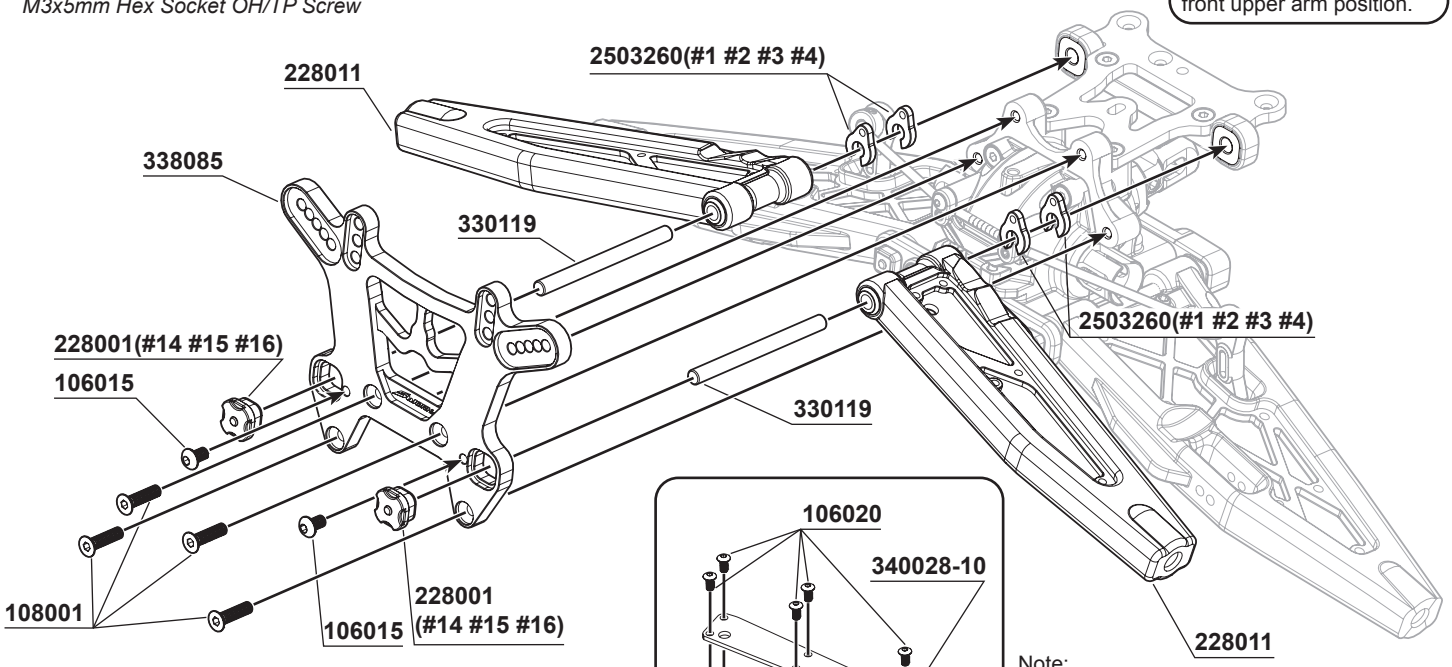

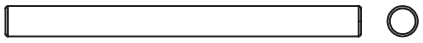

330119
Front Upper Arm Hinge Pin ***x2***

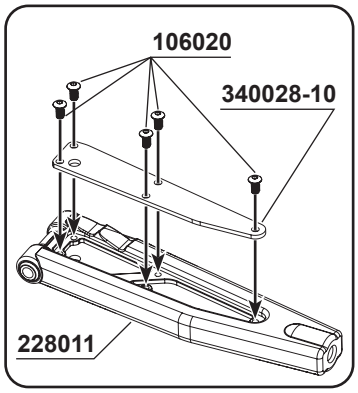

Note:
2503260-1
S35-3 Front Upper Arm Adjust Insert (0.9mm)
2503260-2
S35-3 Front Upper Arm Adjust Insert (1.0mm)
2503260-3
S35-3 Front Upper Arm Adjust Insert (1.1mm)
2503260-4
S35-3 Front Upper Arm Adjust Insert (2.0mm)

13 L R x2



106005
M3x15mm Hex Socket OH/TP Screw ***x2***



106021A
M4x10mm Hex Socket OH/TP Screw ***X2***

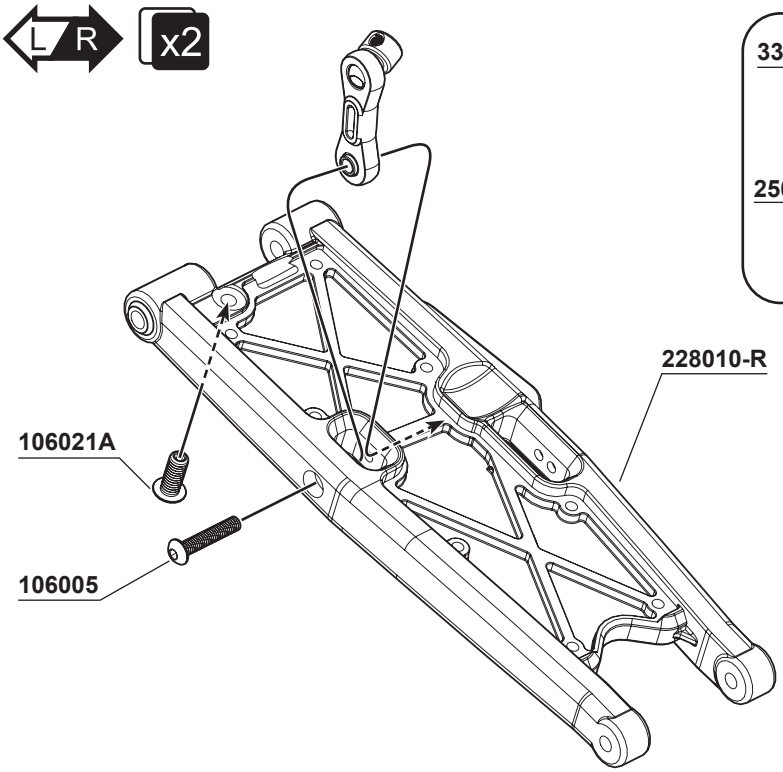

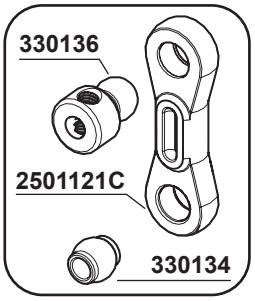

BAG E1

14



108001
M3x12mm FH/ST HEX Screw ***x4***



108005
M3x14mm FH/ST HEX Screw ***x2***



106002
M3x10mm Hex Socket OH/TP Screw ***x2***

15

PRO TIP:
The S35-4 Aluminum Rear Lower Fully Adjustable Toe-In Block (338014) can use 3 types of square inserts to get 1.0/2.0/3.0 3 different toe in angles. Also plus 3 different rear lower arm kick up degrees.



108008
M3x35mm FH/ST HEX Screw ***x2***

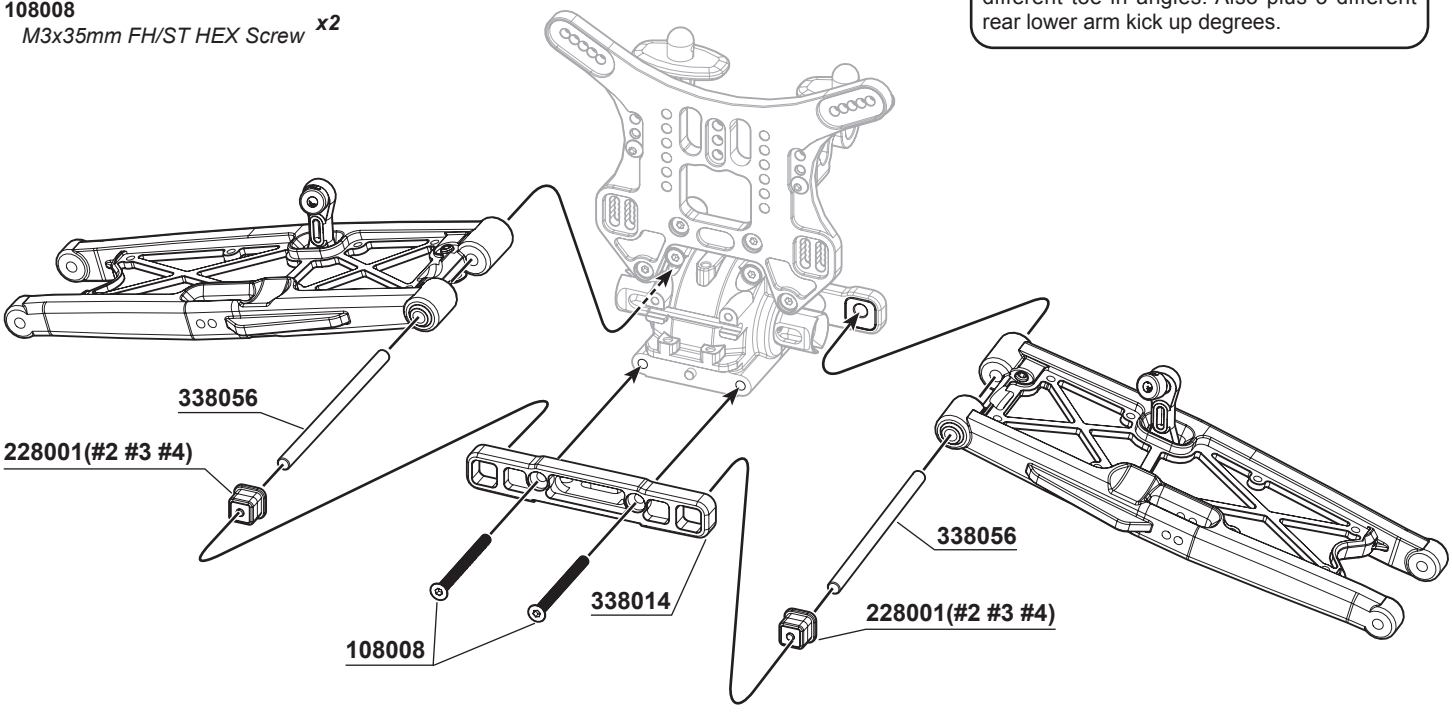

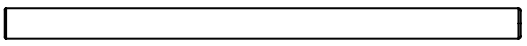

338056
S35-4 Series Lower Arm Hinge Pin (68.5mm) ***x2***

OPTION:

228001-2	S35-4 Series Rear Lower Arm Holder Square Insert (+1/+1)
228001-3	S35-4 Series Rear Lower Arm Holder Square Insert (0/+1)
228001-4	S35-4 Series Rear Lower Arm Holder Square Insert (0)

BAG E1

16

104004
M3x3mm Set Screw x2

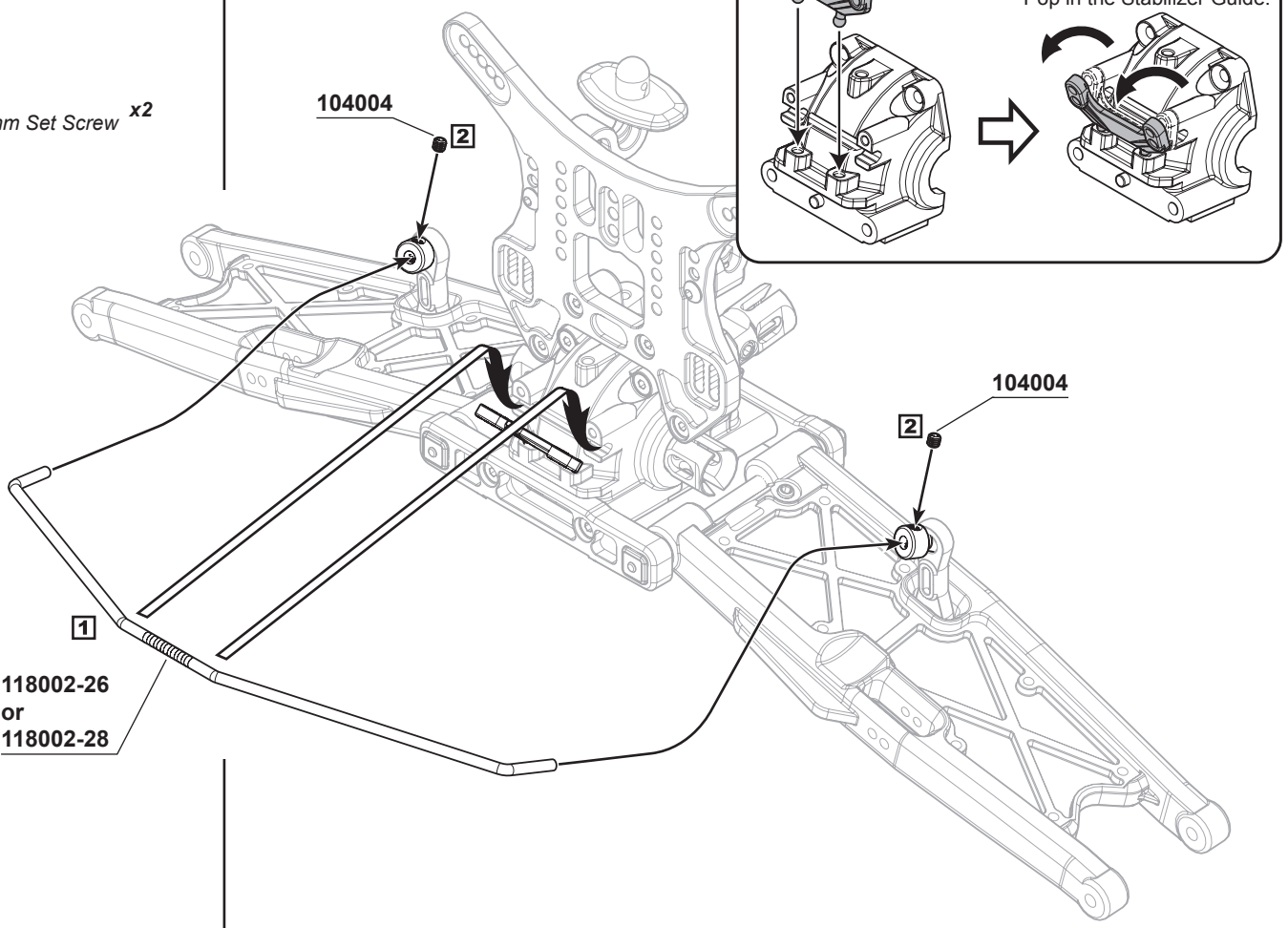

17

104005
M3x4mm Set Screw x2

106013
M2.5x8mmH ex Socket OH/TPScrew x2

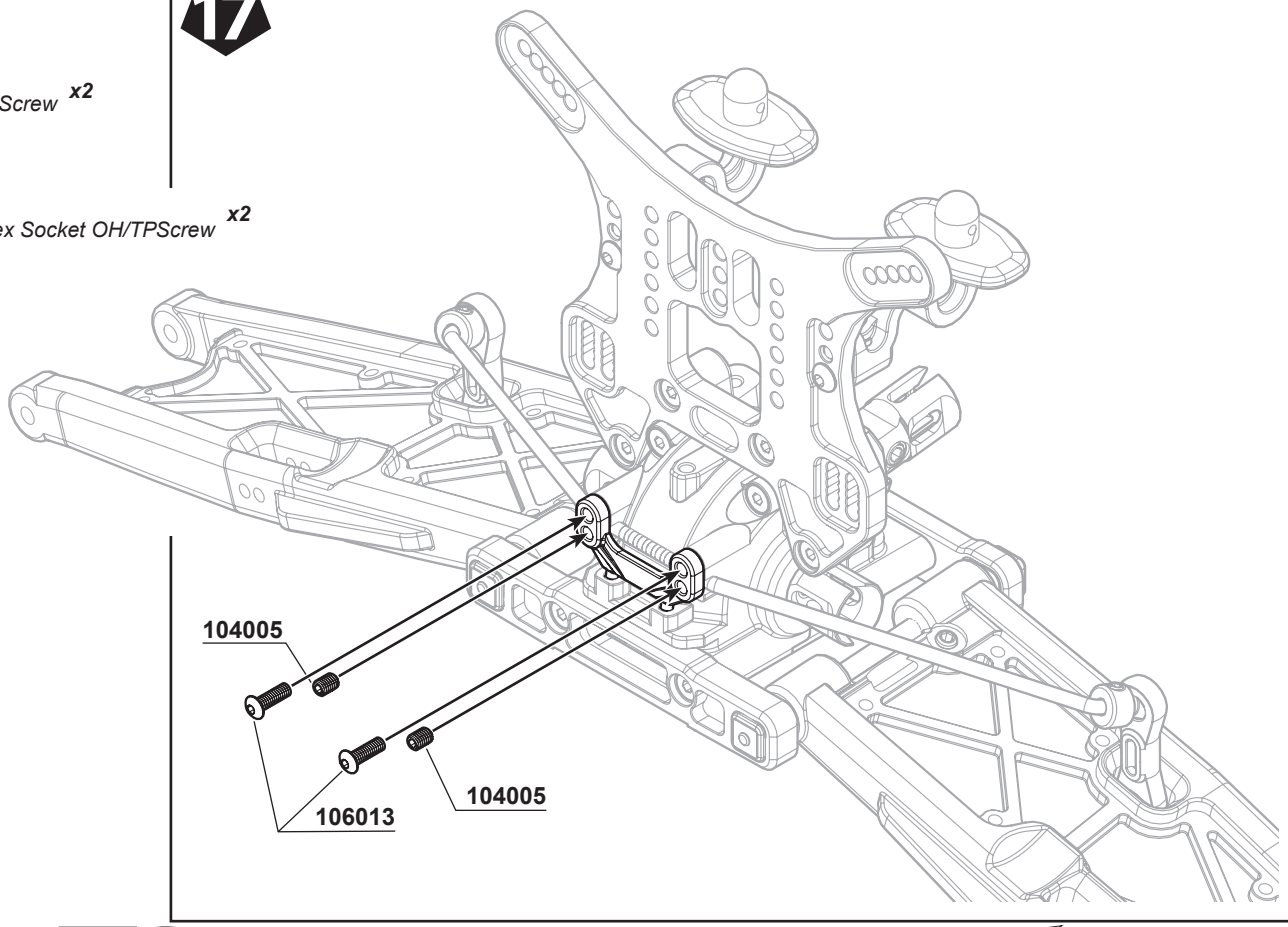

BAG E3

18 L R x2



106002
M3x10mm Hex Socket OH/TP Screw ***x4***

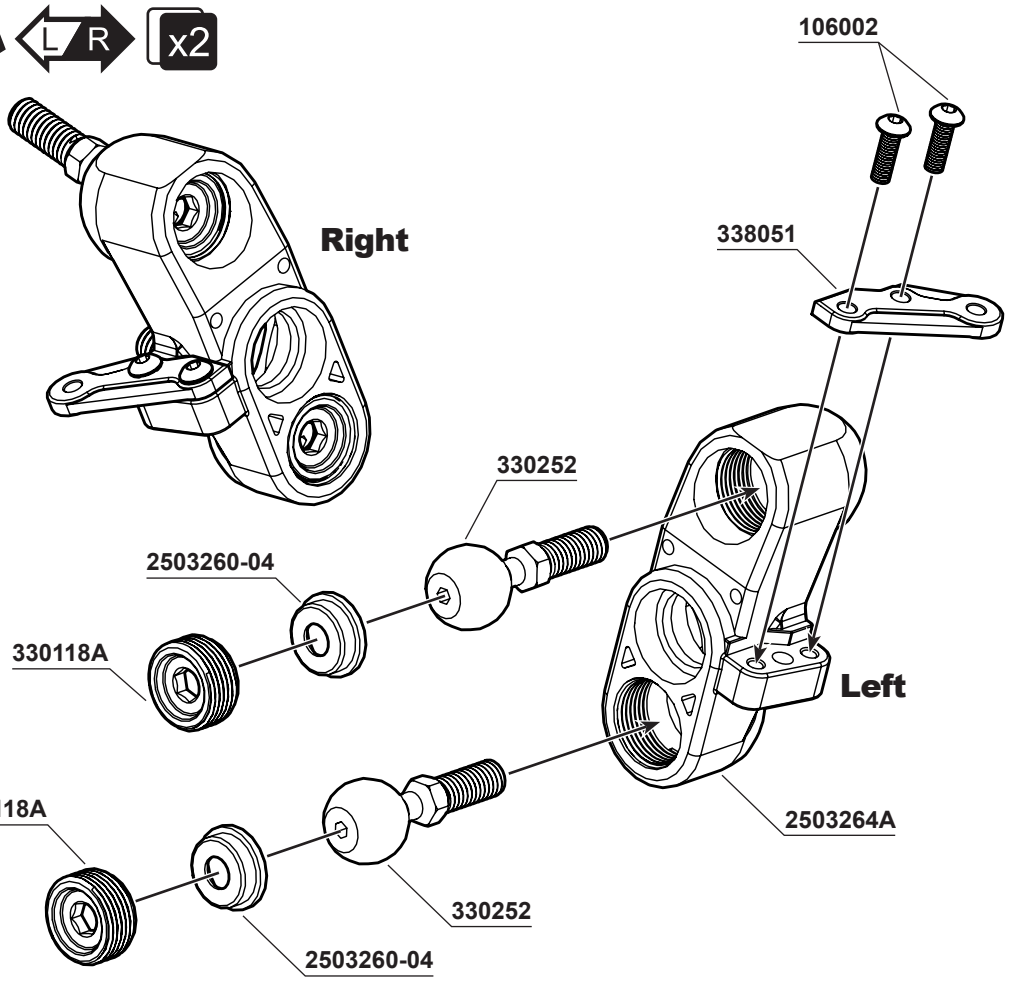

Screw and adjust 330118A Knuckle Pivot Ball Nut so as the pivot ball can be moved smoothly.

19 L R x2



116006R
Ball Bearing 8x16x5mm (Red Rubber Case) ***x4***

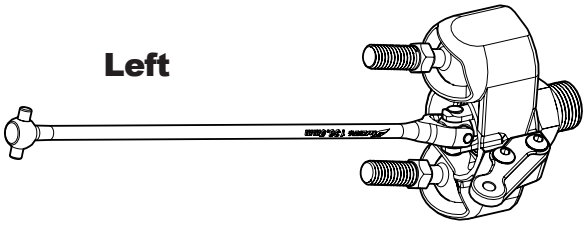

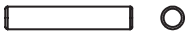

330124
Pin M3.0x16.8mm ***x2***

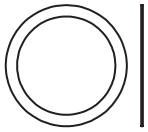

101018
SHIM 13x16x0.2mm ***x1***



104010
M5x4mm Set Screw (Flat Bottom) ***x2***

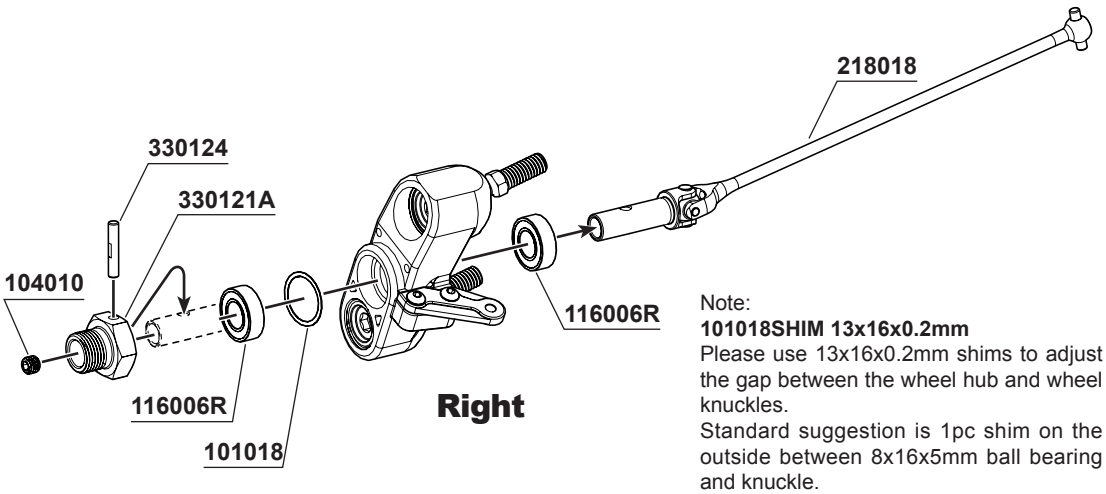

Note:
101018SHIM 13x16x0.2mm
Please use 13x16x0.2mm shims to adjust the gap between the wheel hub and wheel knuckles.
Standard suggestion is 1pc shim on the outside between 8x16x5mm ball bearing and knuckle.
If the wheel hub still has big play with knuckle, please try to put another shim in another side between ball bearing and knuckle.

BAG E3 20 L R x2

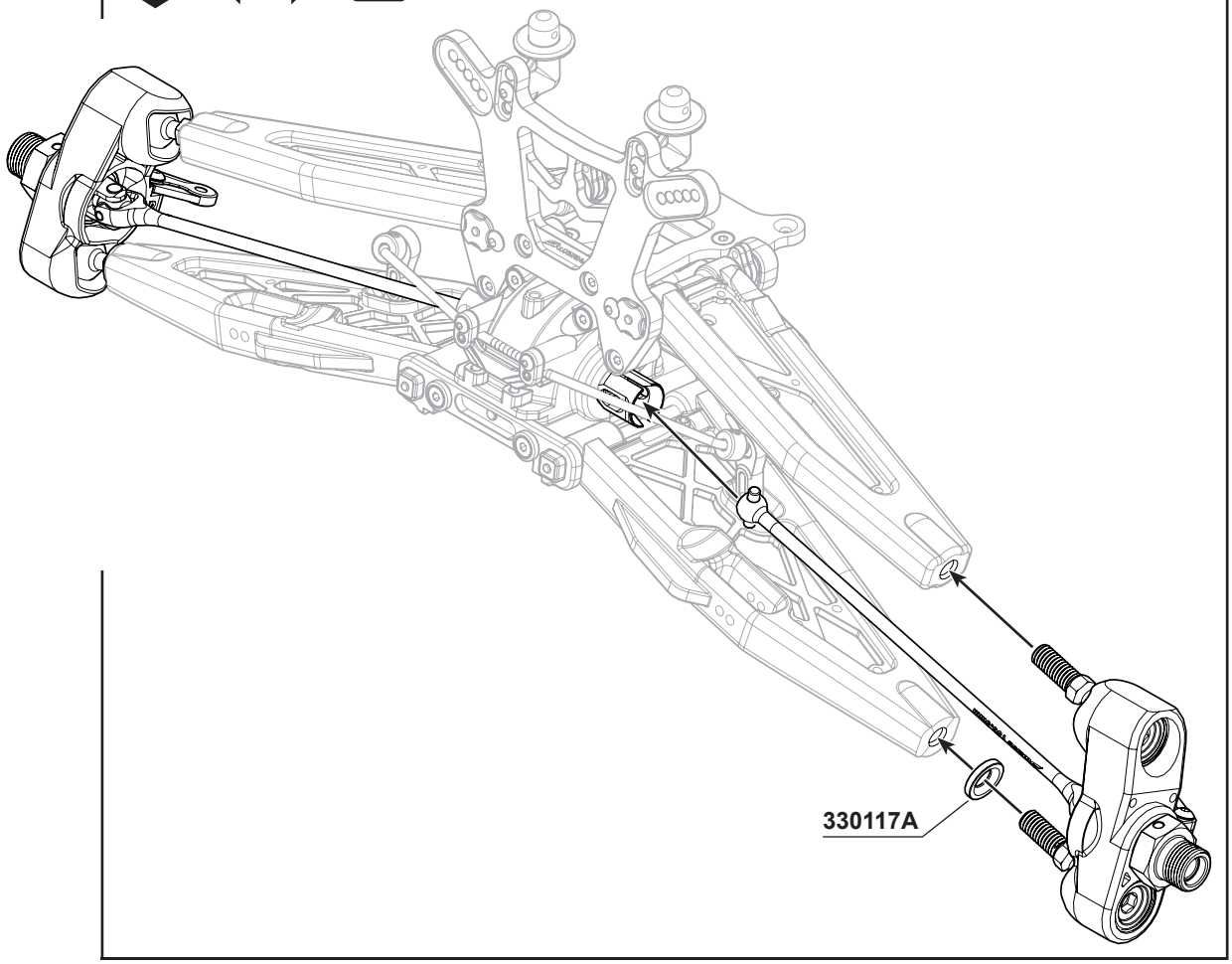

BAG E2 21



103001
M3 Nut Lock ***x2***



101021
M3x8xT1mm ***x2***



117003
Flange Ball Bearing 3x6x2.5mm ***x4***



106007
M3x12mm Hex Socket OH/TP Screw(HT) ***x2***



116004R
Ball Bearing 6x10x3mm (Red Rubber Case) ***x2***



106014
M2x6mm Hex Socket OH/TP Screw ***x1***

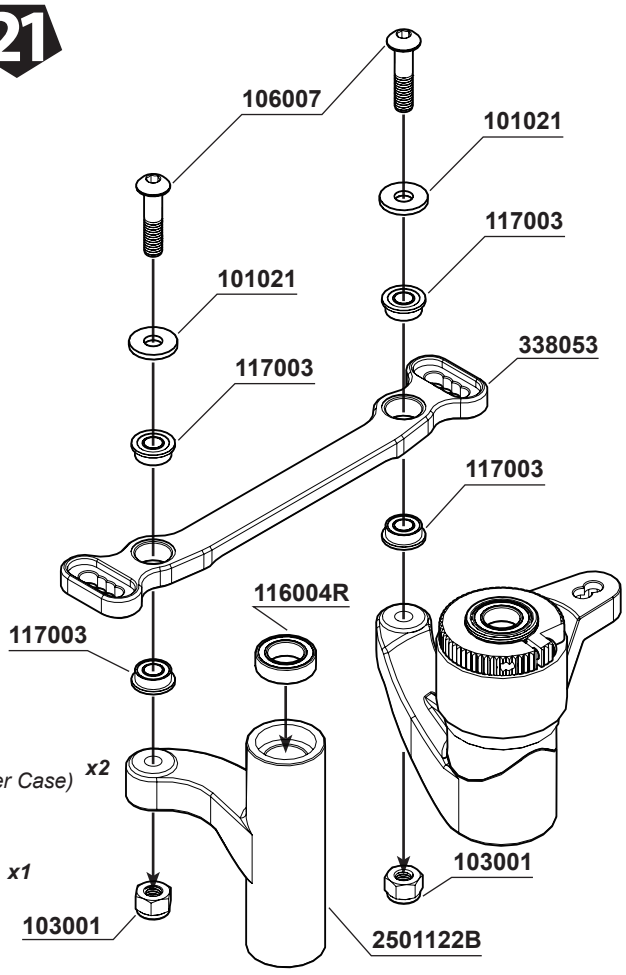

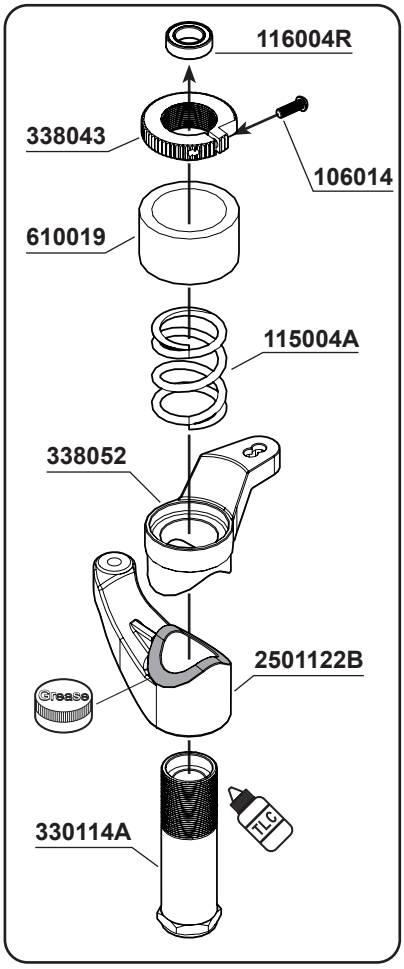

BAG E2

22

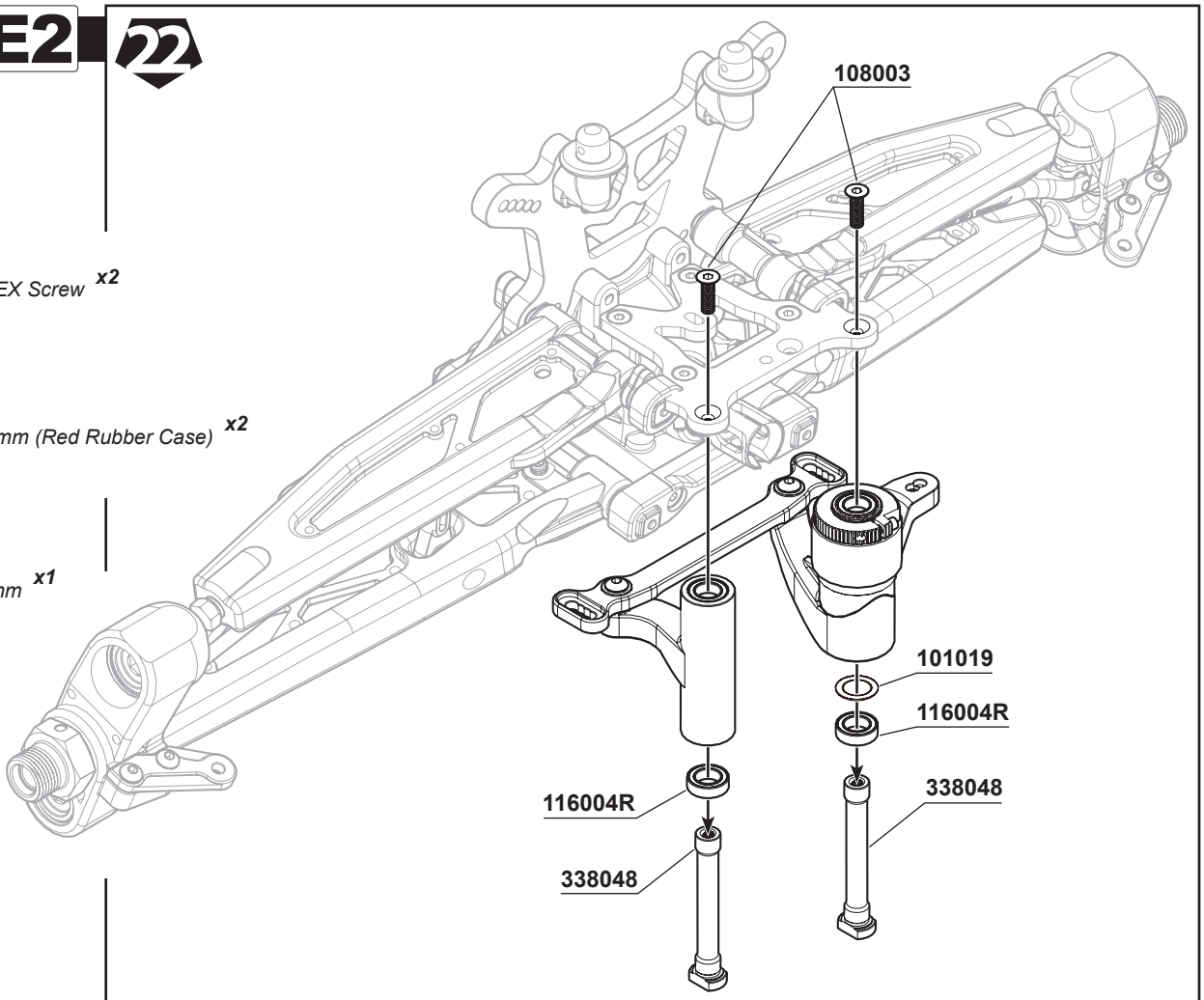

108003
M3x10mm FH/ST HEX Screw x2

116004R
Ball Bearing 6x10x3mm (Red Rubber Case) x2

101019
SHIM 6.0x10.0x0.2mm x1

23

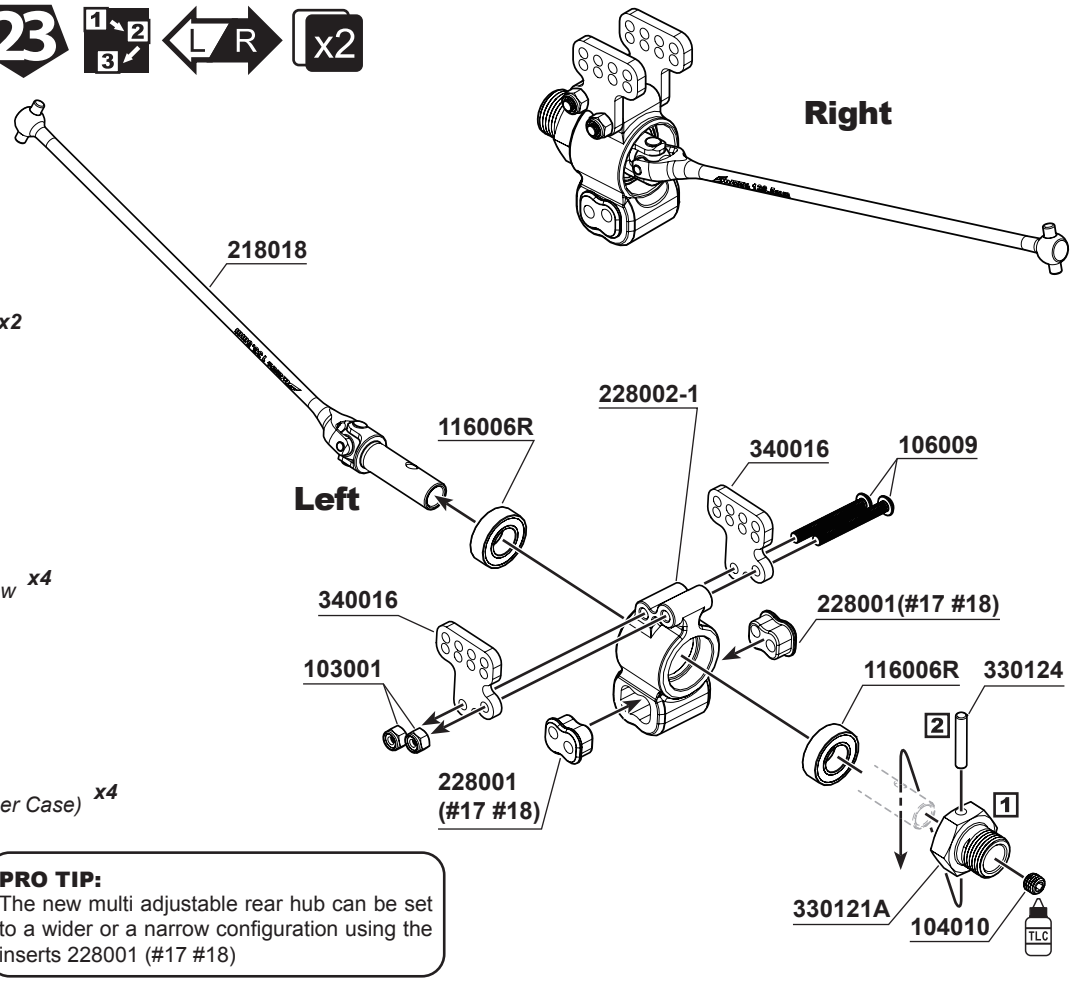

103001
M3 Nut Lock x4

104010
M5x4mm Set Screw (Flat Bottom) x2

330124
Pin M3.0x16.8mm x2

106009
M3x25mm Hex Socket OH/TP Screw x4

116006R
Ball Bearing 8x16x5mm (Red Rubber Case) x4

PRO TIP:
The new multi adjustable rear hub can be set to a wider or a narrow configuration using the inserts 228001 (#17 #18)

BAG E2

24

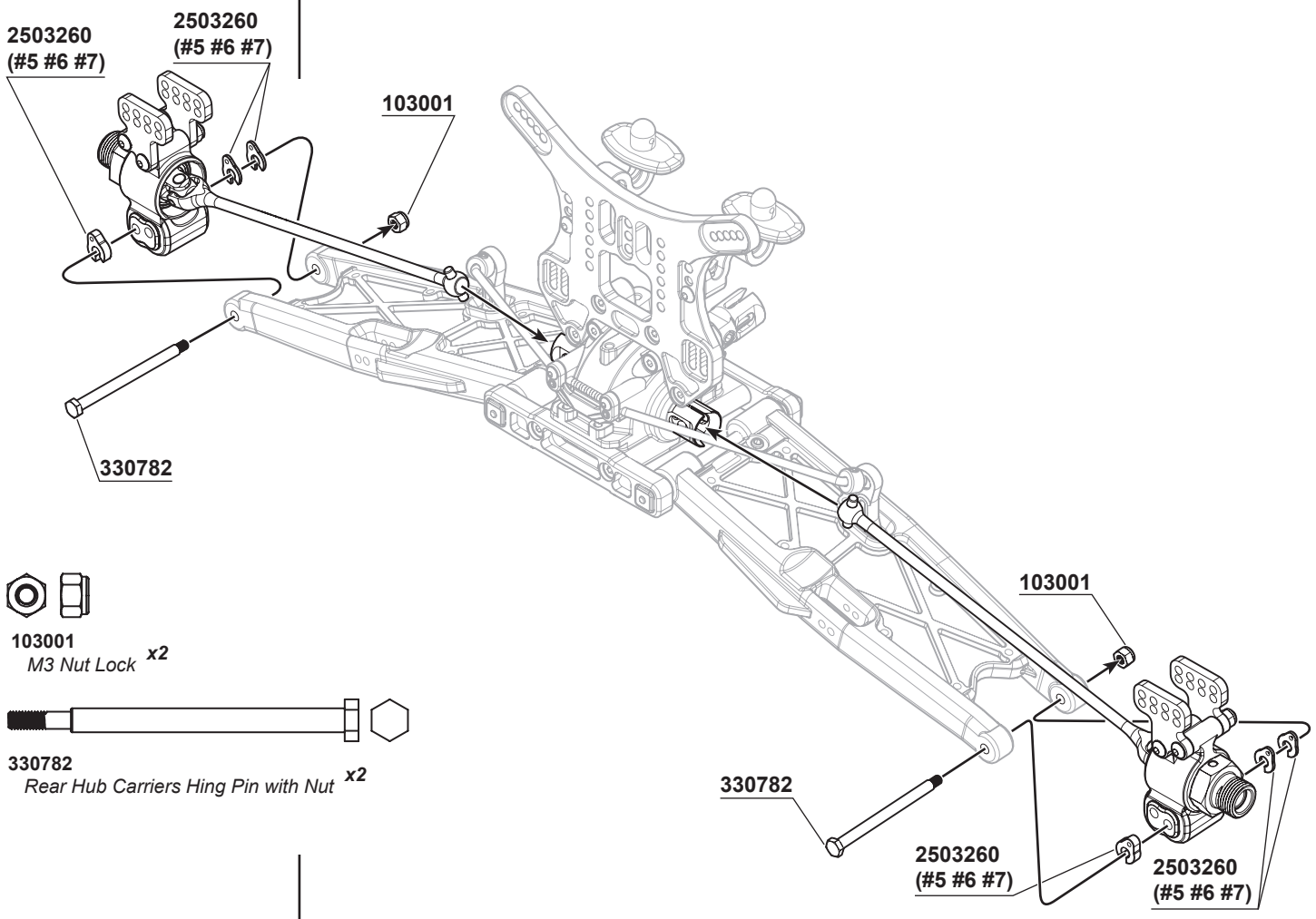

103001
M3 Nut Lock ***x2***

330782
Rear Hub Carriers Hing Pin with Nut ***x2***

25 L R x2

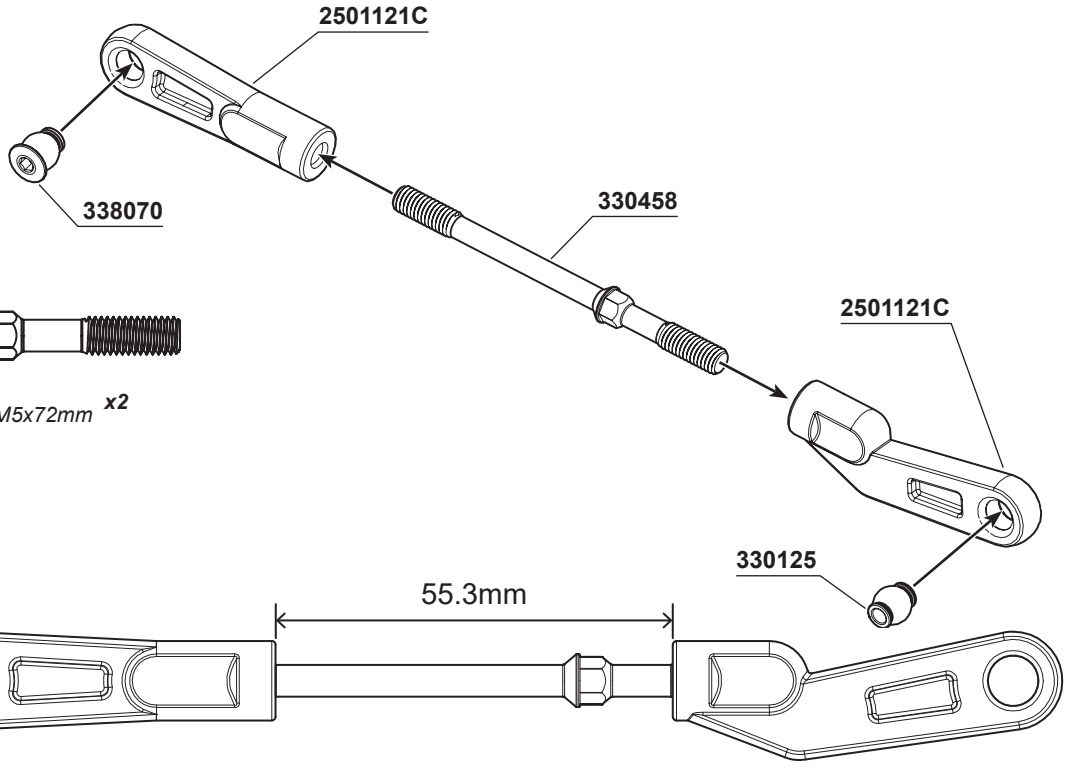

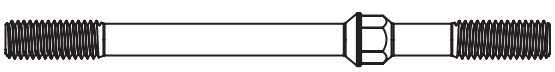

330458
S350T Rear Upper Arm Turnbuckle M5x72mm ***x2***

1:1

BAG E2

26 L R x2



106002
M3x10mm Hex Socket OH/TP Screw ***x2***



106009
M3x25mm Hex Socket OH/TP Screw ***x2***



103001
M3 Nut Lock ***x2***

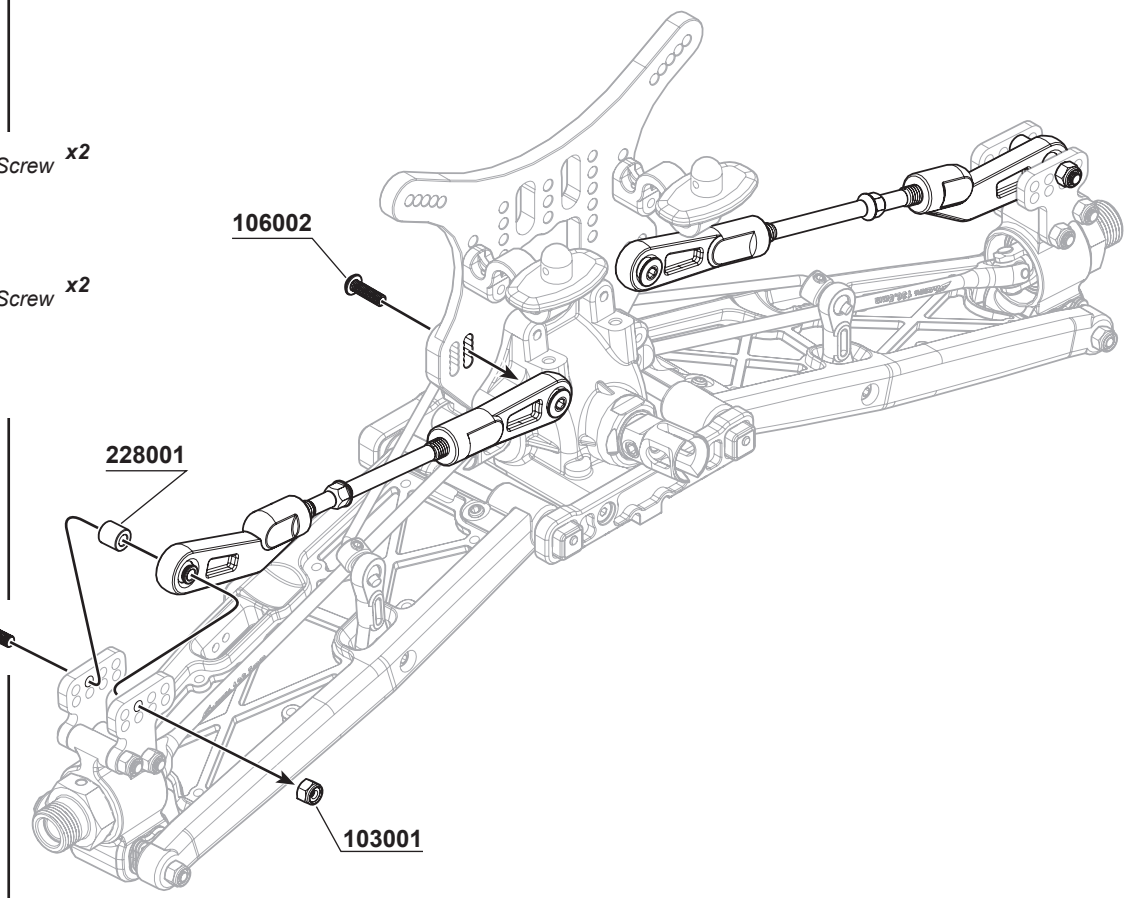

27



106003
M3x16mm Hex Socket OH/TP Screw ***X4***



103001
M3 Nut Lock ***x4***



108019
M2.6x6mm Flat Head Screw - Hex Socket ***x2***

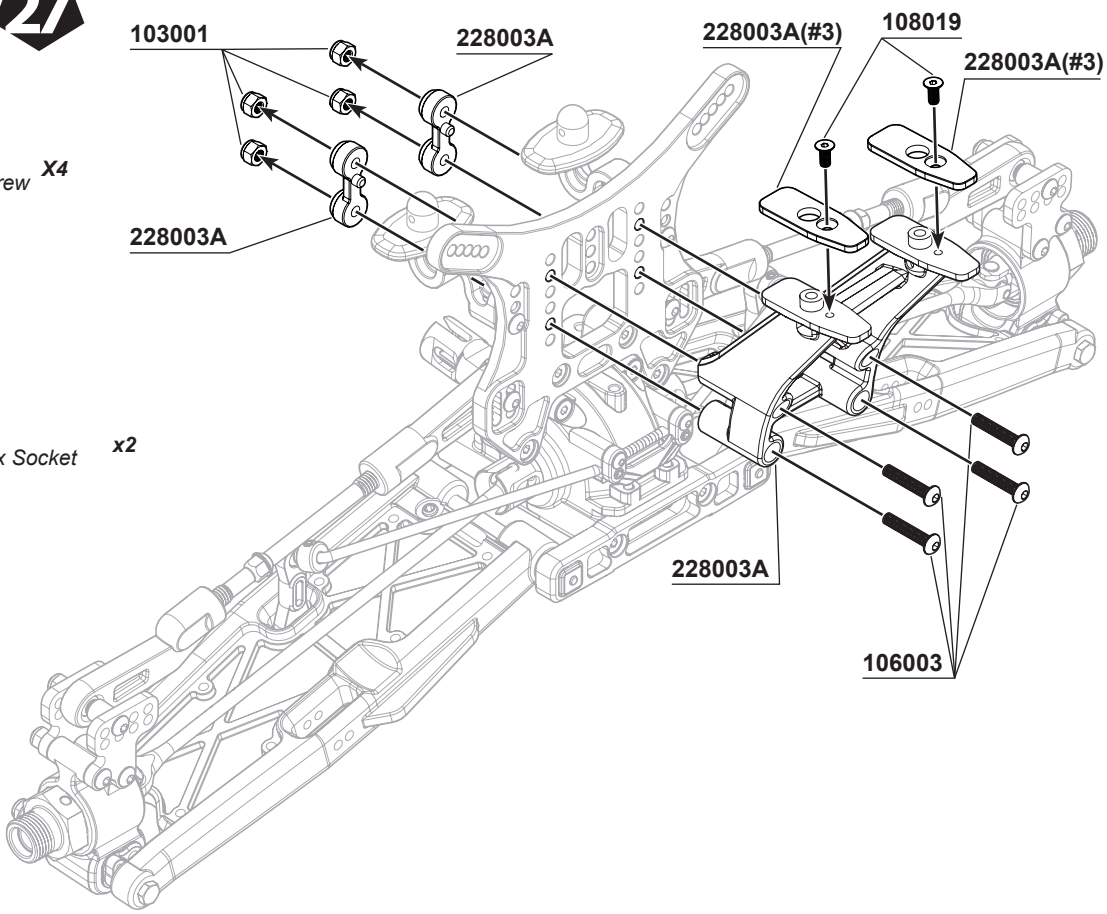

28



108007
M3x6mm FH/ST HEX Screw ***x10***

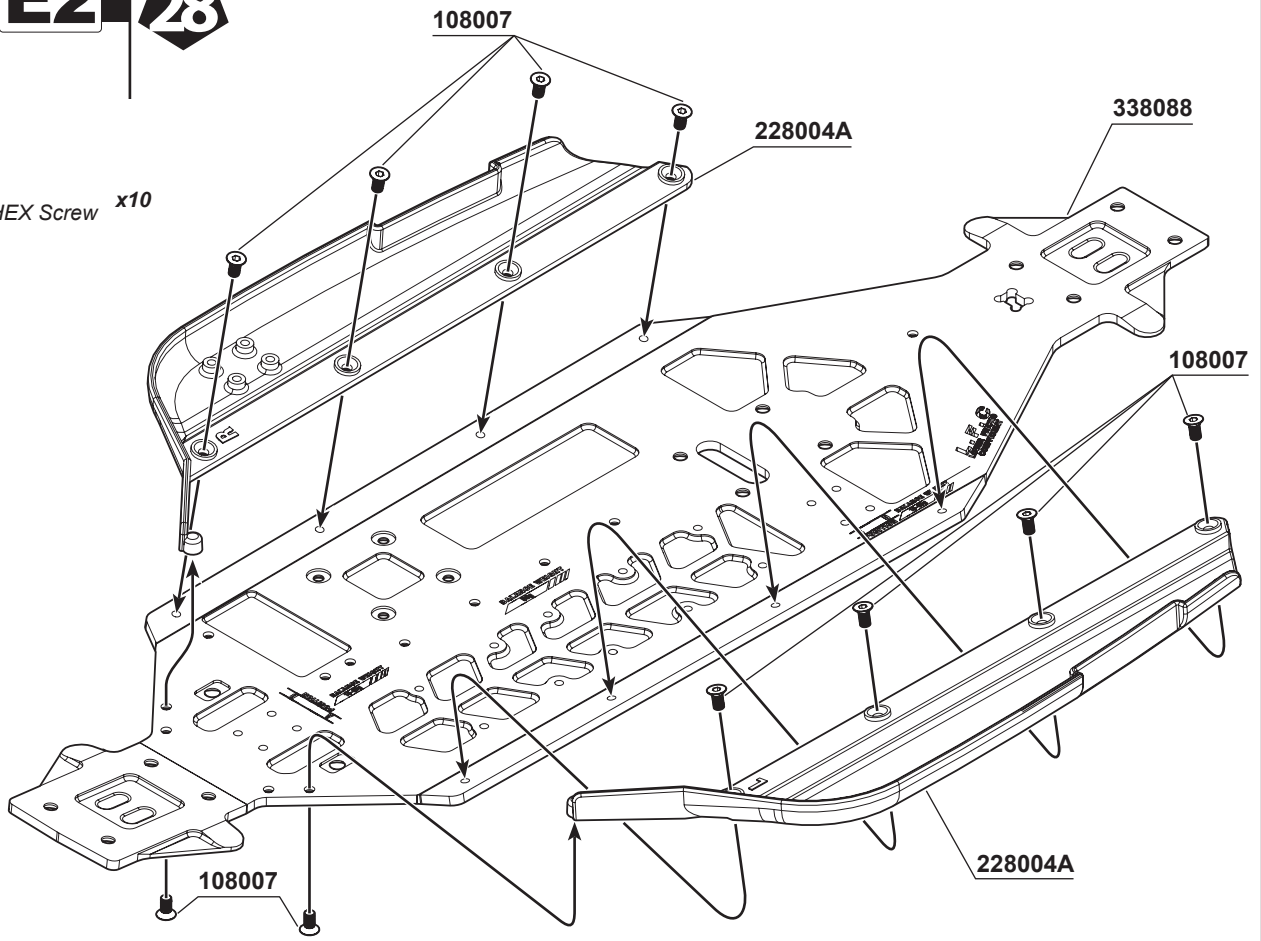

29



108003
M3x10mm FH/ST HEX Screw ***x2***



108010
M4x10mm FH/ST HEX Screw ***x2***



108012
M4x16mm FH/ST HEX Screw ***x4***

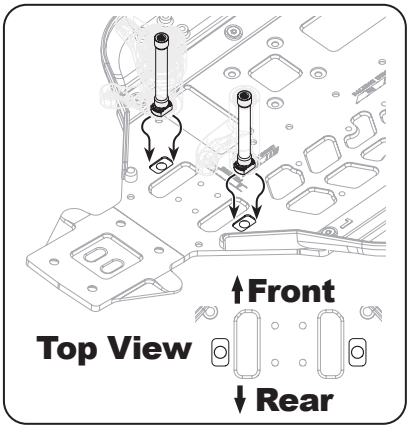

BAG E2



108001
M3x12mm FH/ST HEX Screw **x2**



108012
M4x16mm FH/ST HEX Screw **x4**

30

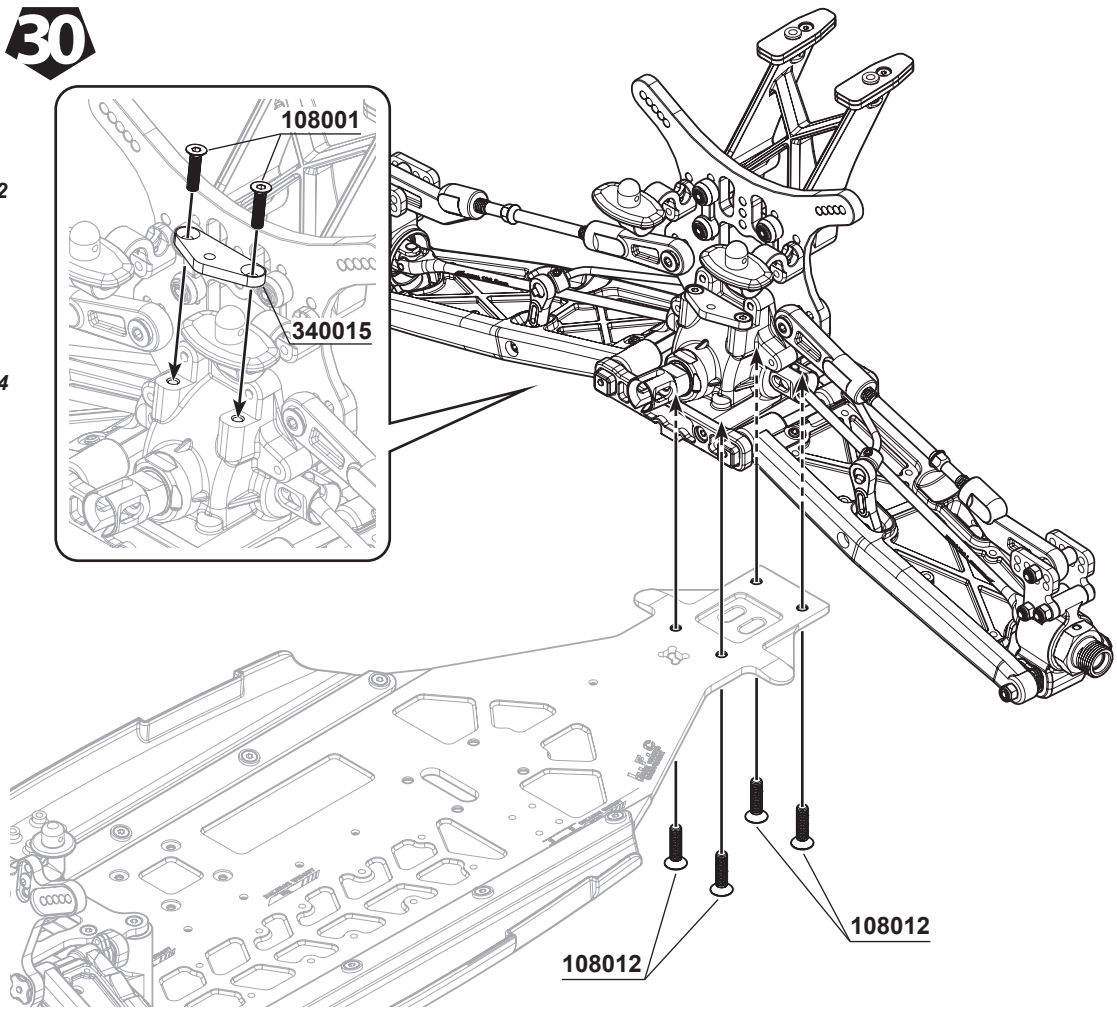

31



106002
M3x10mm Hex Socket OH/TP Screw **x2**



106008
M3x12mm Hex Socket OH/TP Screw **x2**



106006
M3x20mm Hex Socket OH/TP Screw **x2**



104011
M4x4mm Set Screw (Flat Bottom) **x1**



106024
M4x12mm Hex Socket OH/ST Screw **x2**

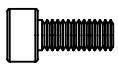

105020
M4x10mm Cap Screw **x2**

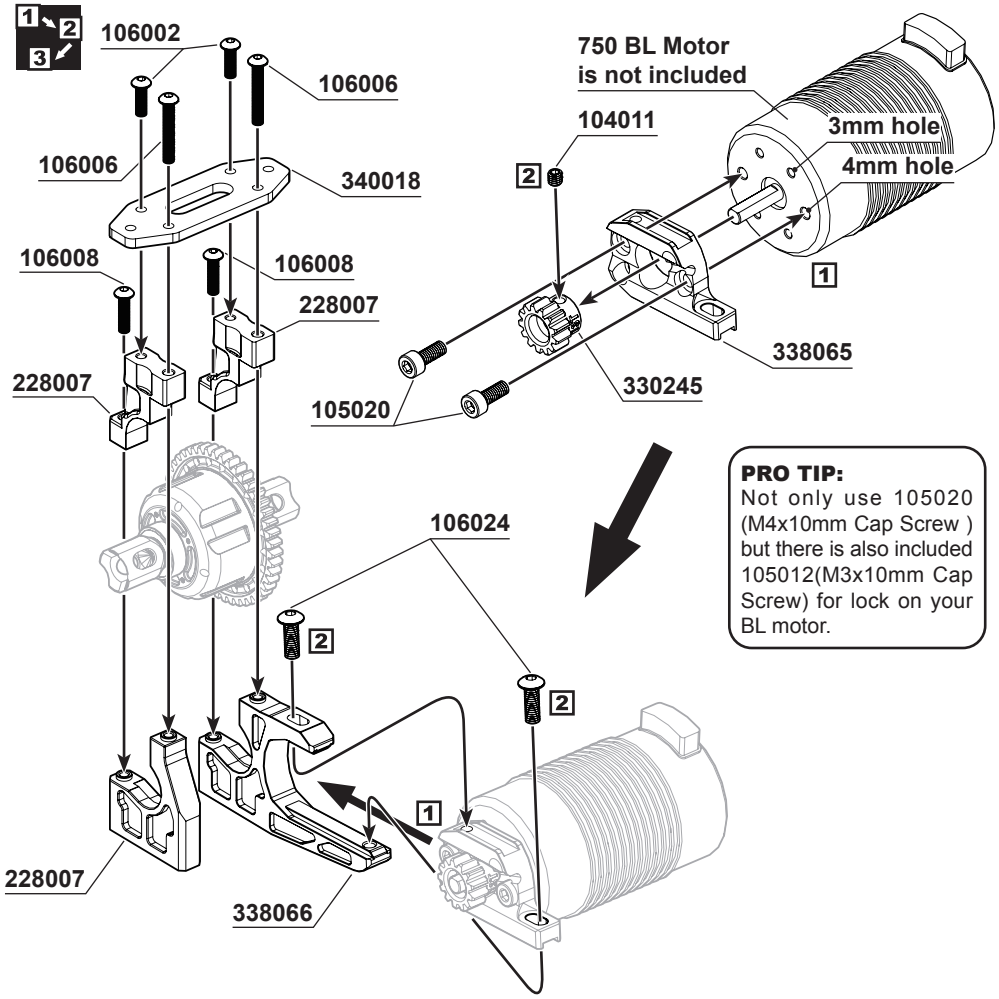

PRO TIP:
Not only use 105020 (M4x10mm Cap Screw) but there is also included 105012(M3x10mm Cap Screw) for lock on your BL motor.

32



108003
M3x10mm FH/ST HEX Screw ***x4***



108010
M4x10mm FH/ST HEX Screw ***x4***

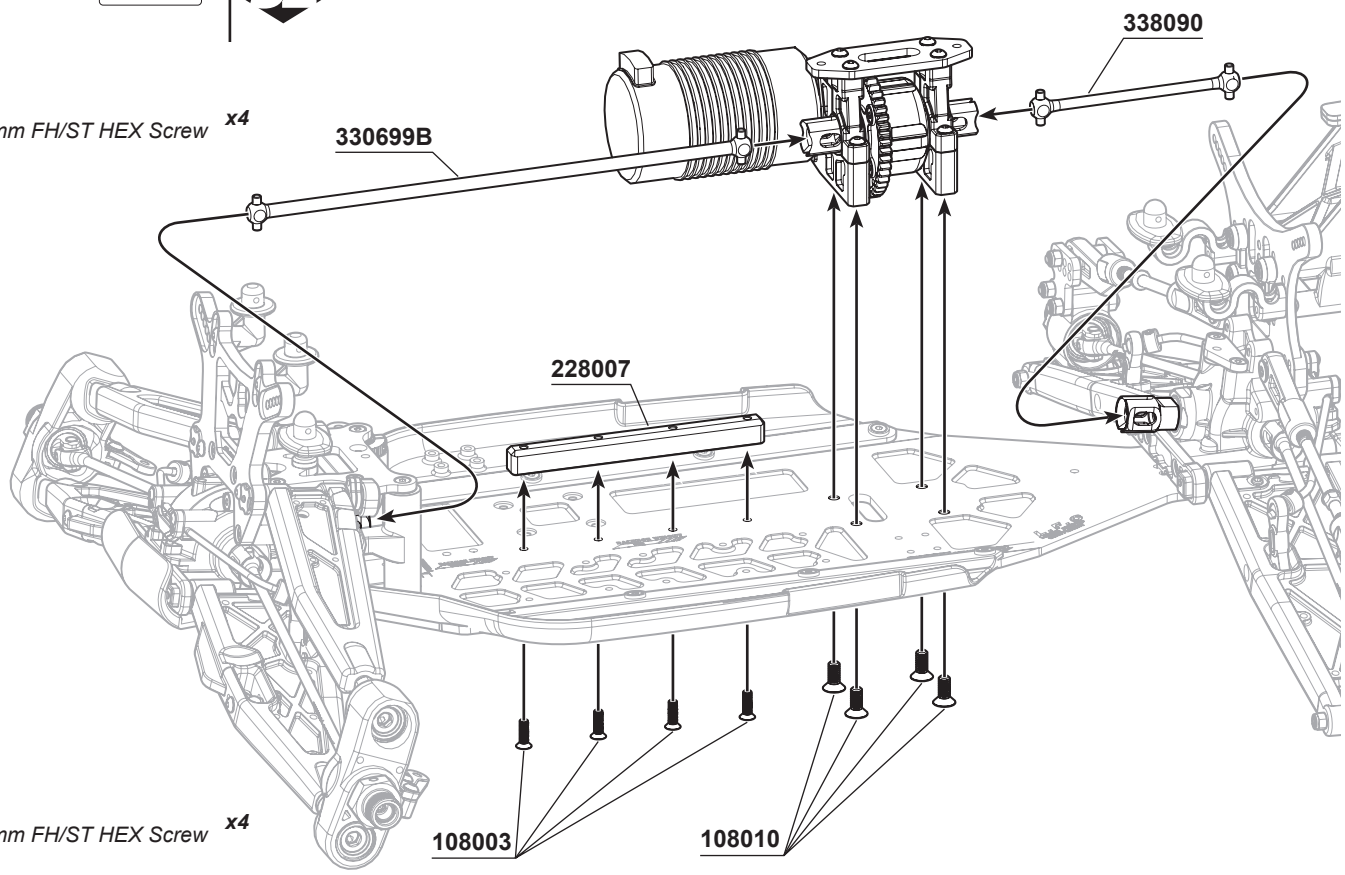

33



106001
M3x8mm Hex Socket OH/TP Screw ***x1***



108003
M3x10mm FH/ST HEX Screw ***x3***



101020A
3mm Countersunk Washers (GM) ***x3***

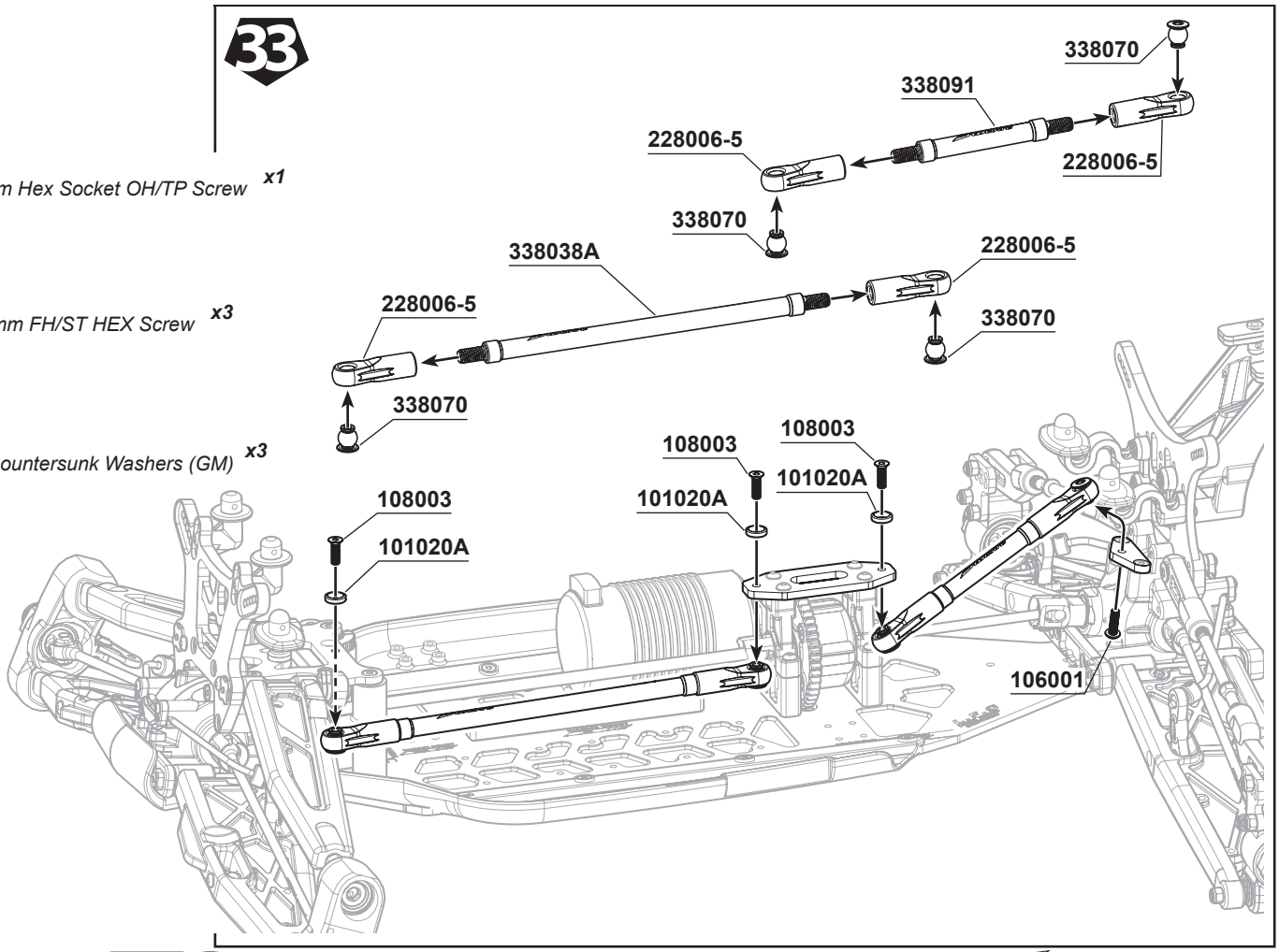

34

108006
M3x8mm FH/ST HEX Screw x8

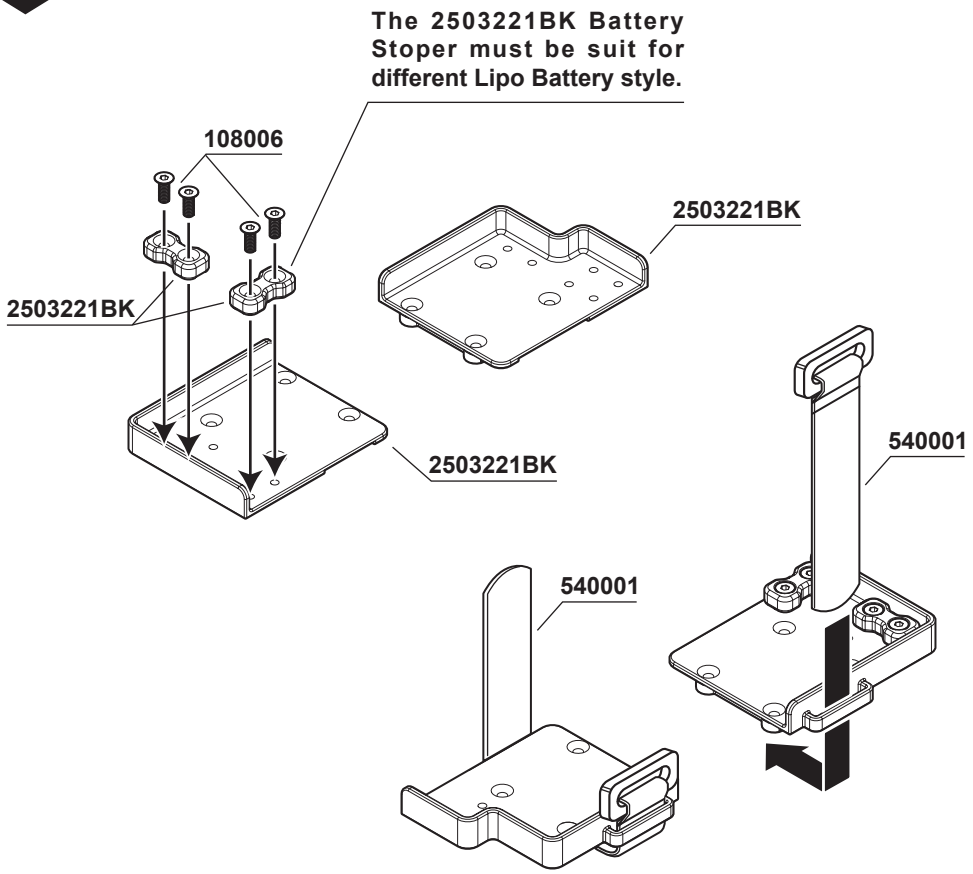

35

108006
M3x8mm FH/ST HEX Screw x8

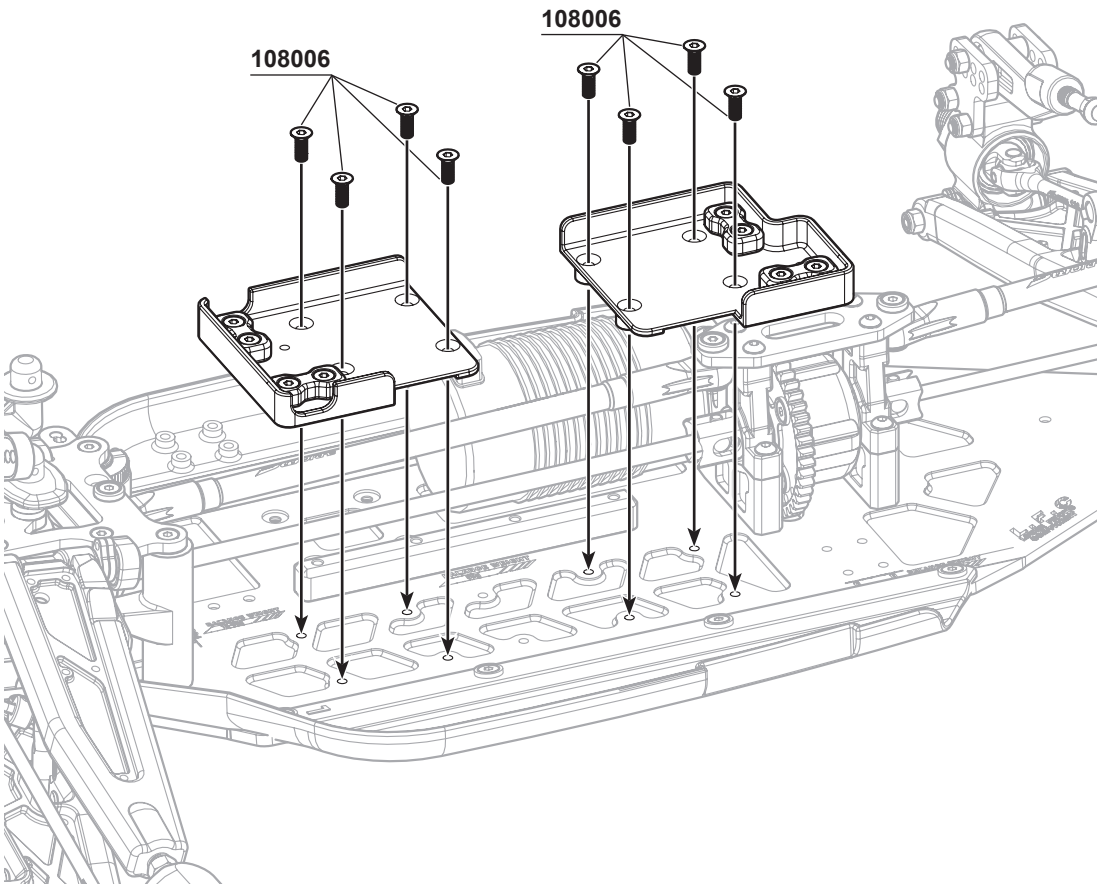

BAG E2

36 L R x2

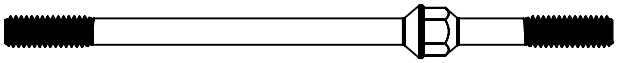

338089
Steering Linkage Turnbuckle M4x80mm ***x2***

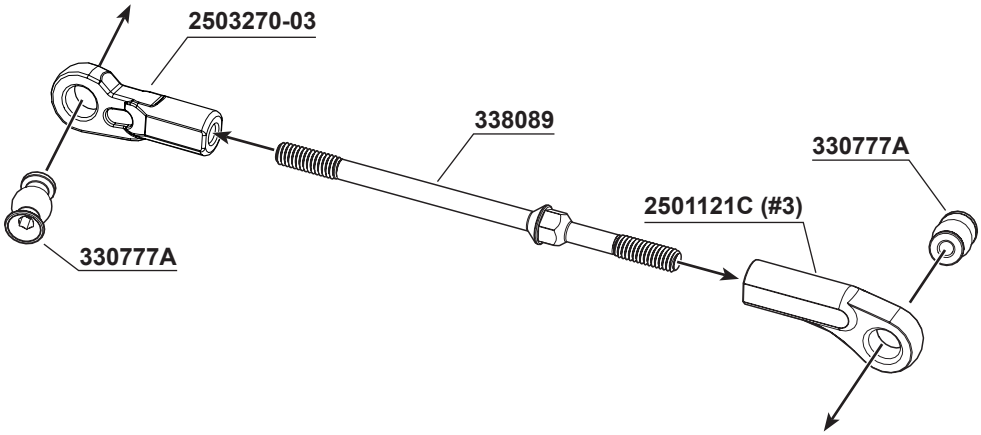

1:1

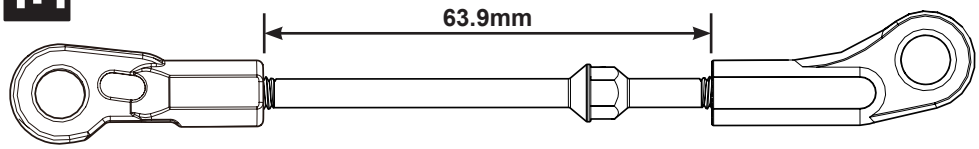

37 L R x2



106002
M3x10mm Hex Socket OH/TP Screw ***x4***

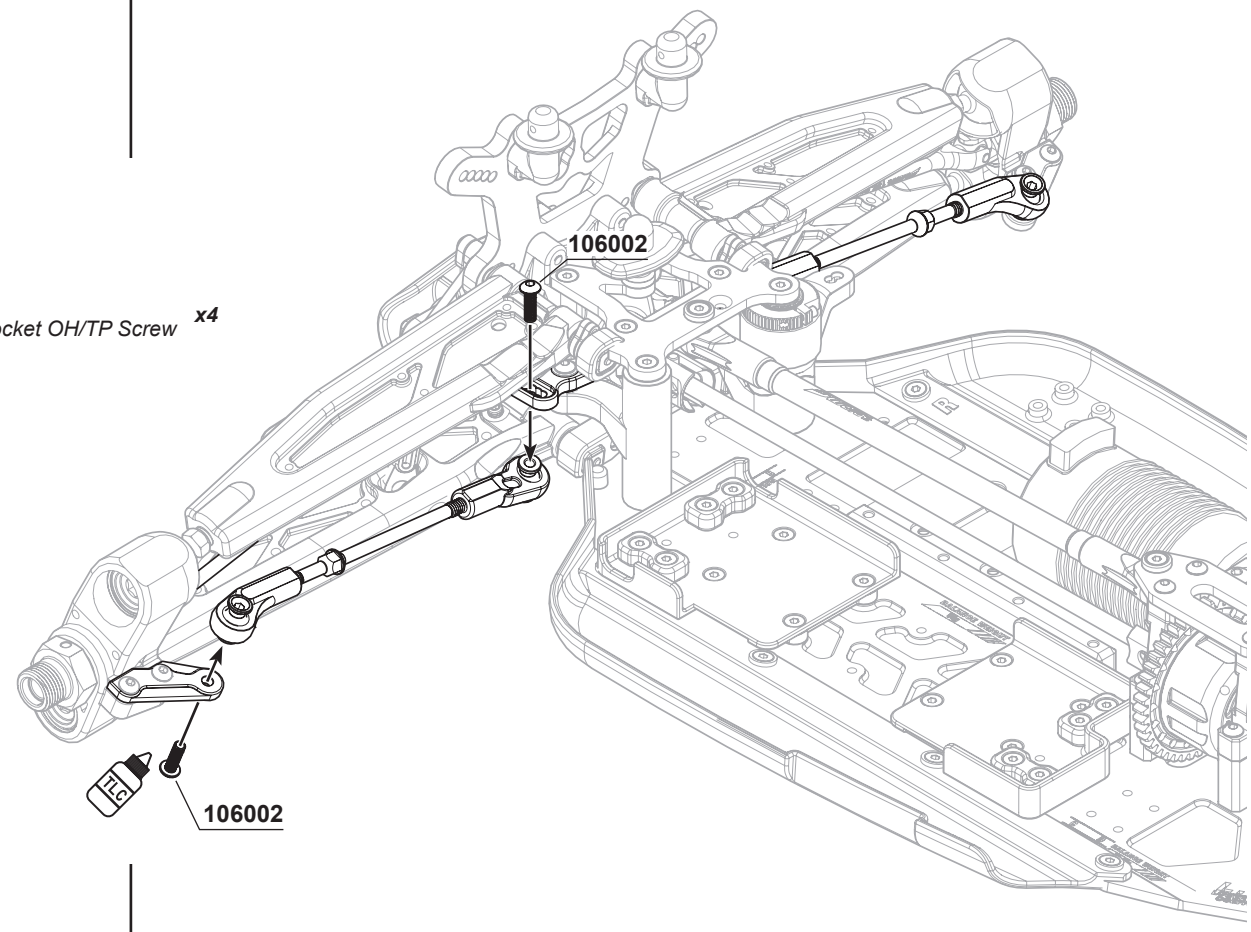

BAG F

104009
M3x16mm Set Screw ***x1***

106008
M3x12mm Hex Socket OH/TP Screw ***x4***

108006
M3x8mm FH/ST HEX Screw ***x1***

108003
M3x10mm FH/ST ***x1***

101012
M3x6xT0.6mm ***x4***

38

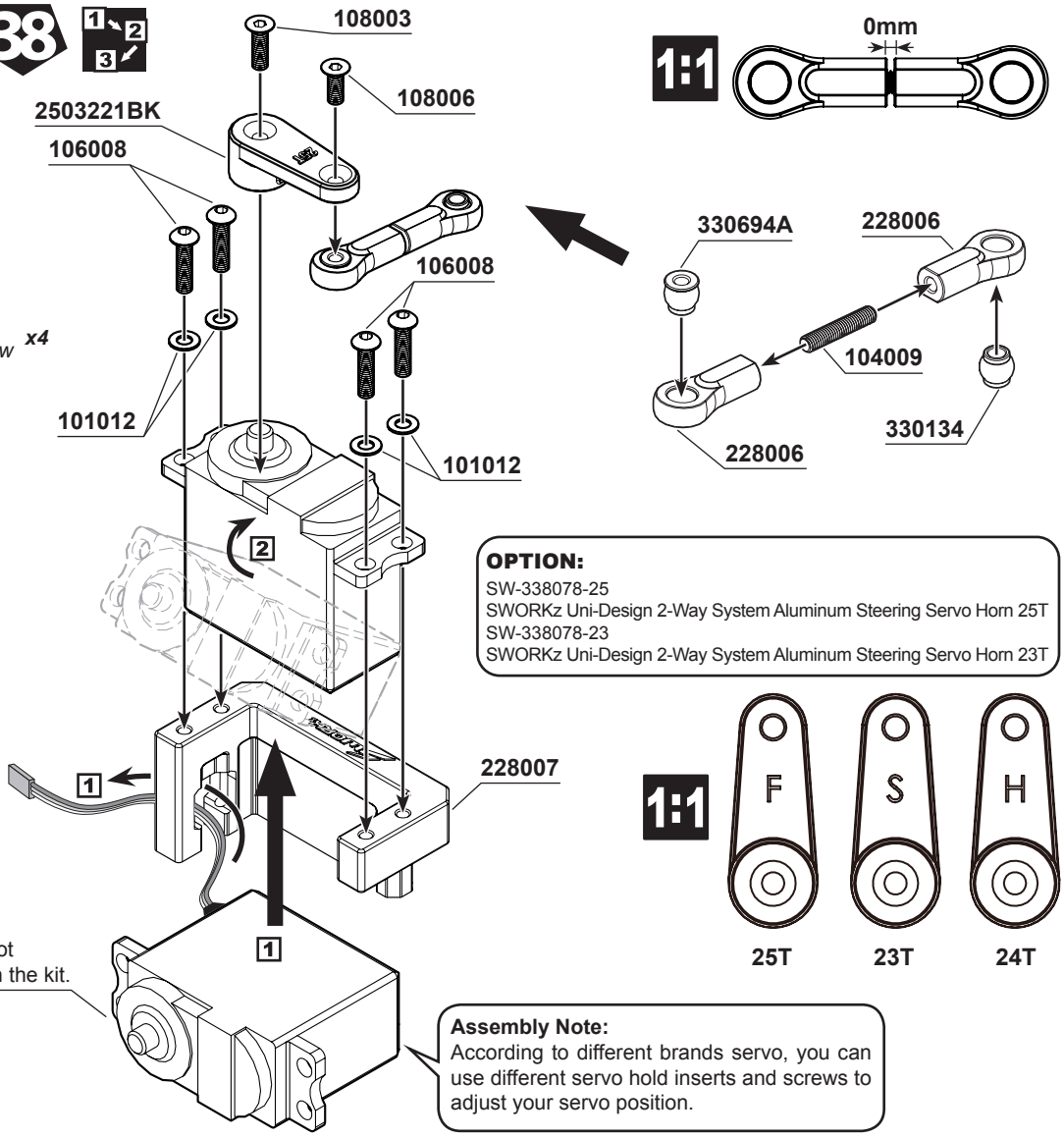

106008
M3x12mm Hex Socket OH/TP Screw ***x1***

108003
M3x10mm FH/ST ***x3***

103001
M3xNut Lock ***x1***

39

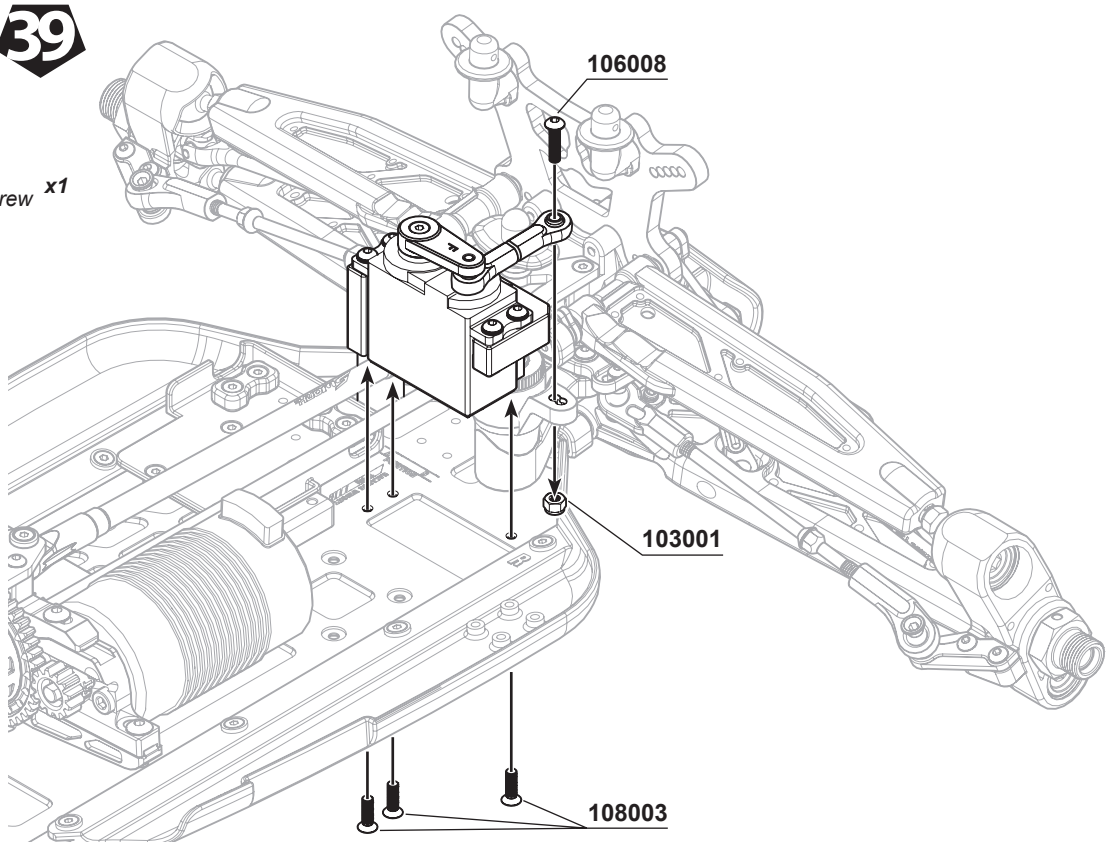

BAG F

108003
M3x10mm FH/ST ***x4***

40

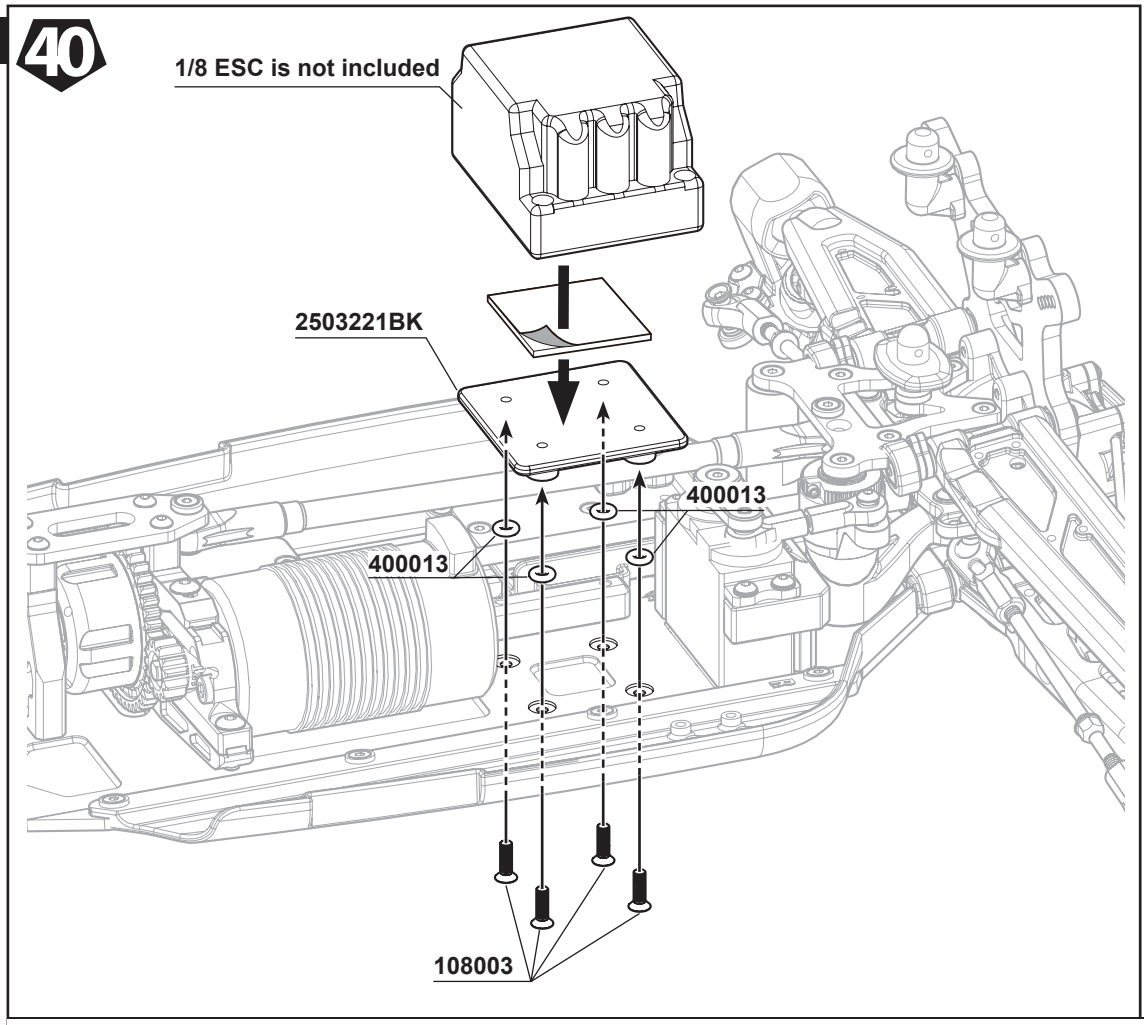

106010
M3x6mm Hex Socket OH/TP Screw ***x4***

108007
M3x6mm FH/ST HEX Screw ***x4***

41

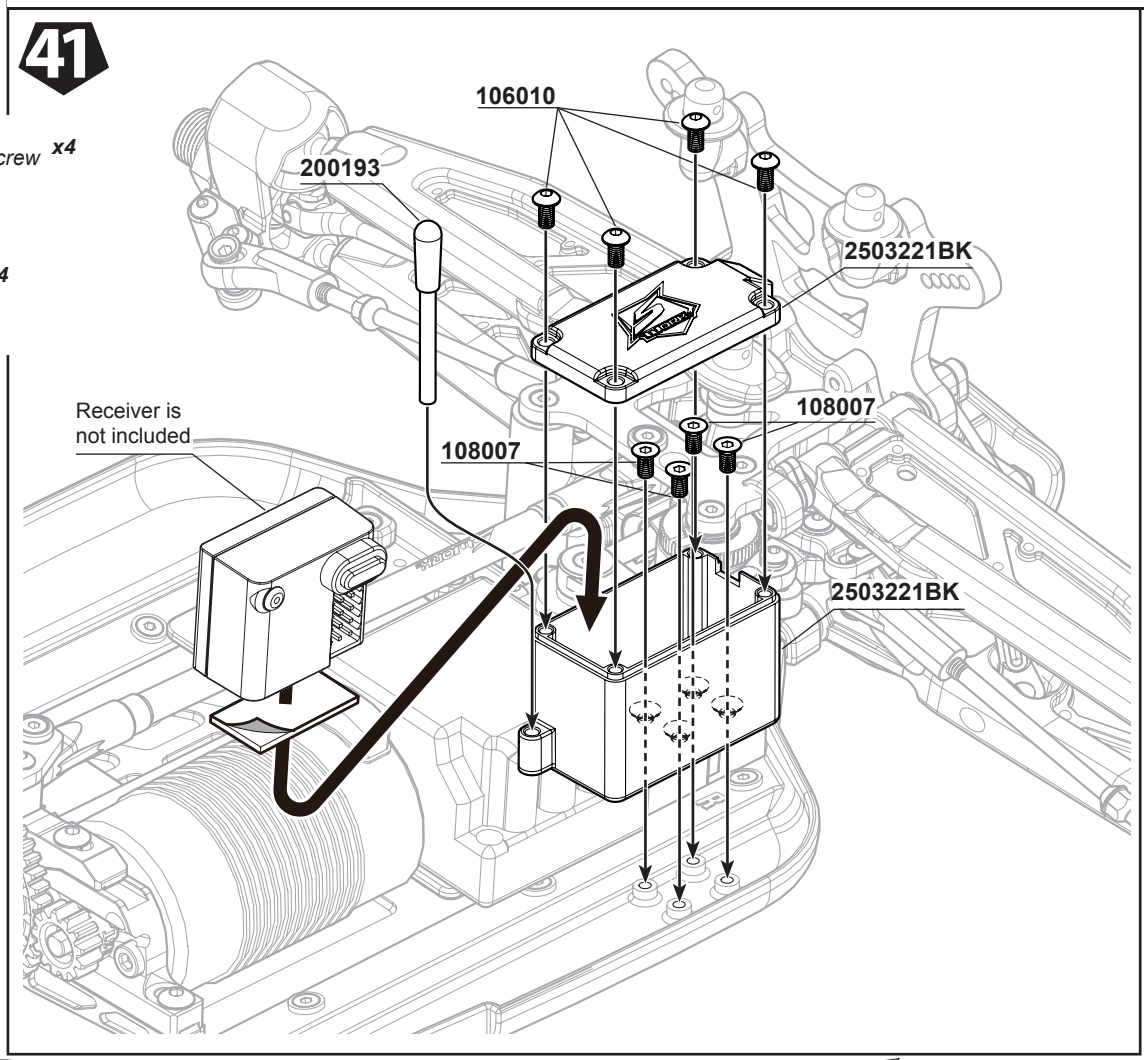

BAG K

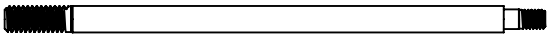

330635(L)
S350 New BBS System +5.5mm Shock Shaft (L) x2

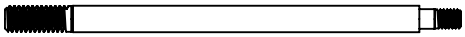

330636(S)
S350 New BBS System +1.3mm Shock Shaft (S) x2



103004
M2.5mm Nut Lock x4



210058
Shock Seal Washer 3.5X7X1.0mm x4



210058
Shock Seal Washer 3.6X7X2.5mm x8



101011
M2.6x6xT0.6mm x4



210058
Shock Seal O-Ring x8

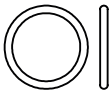

400020
Shock Seal O-Ring x4

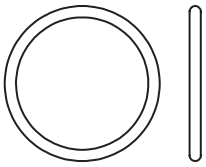

400019
Shock Spring Adjust Nut O-Ring x4



108029
M2.0x4.6mm FH/ST HEX Screw (1.5mm HexHead) x4

42

F/R x2 For Front x2 For Rear

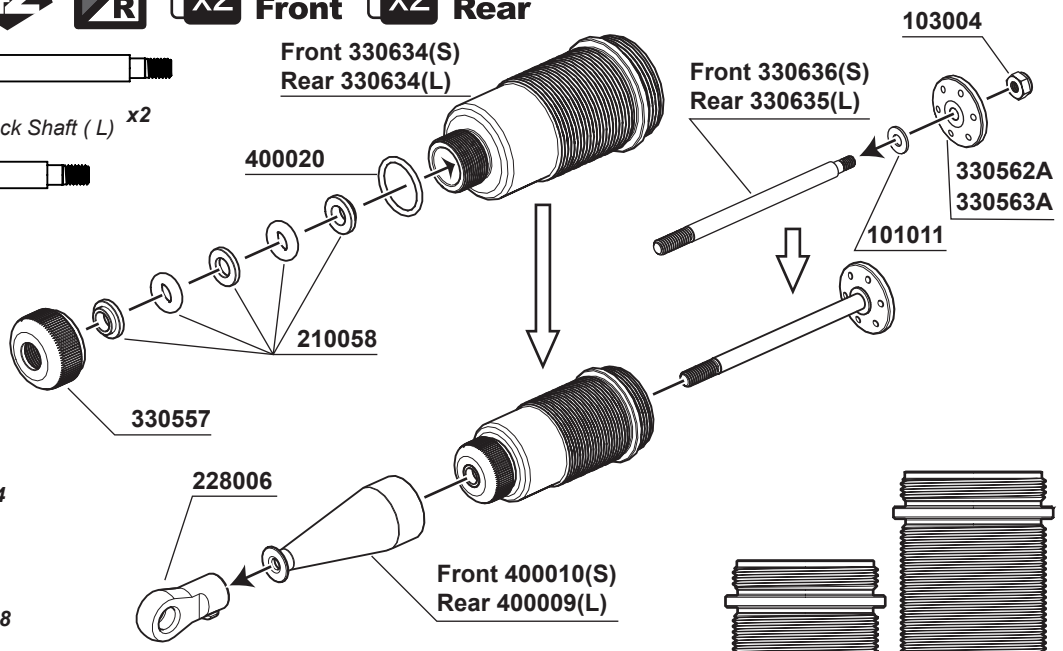

43

Standard bladder shock cap assembly note

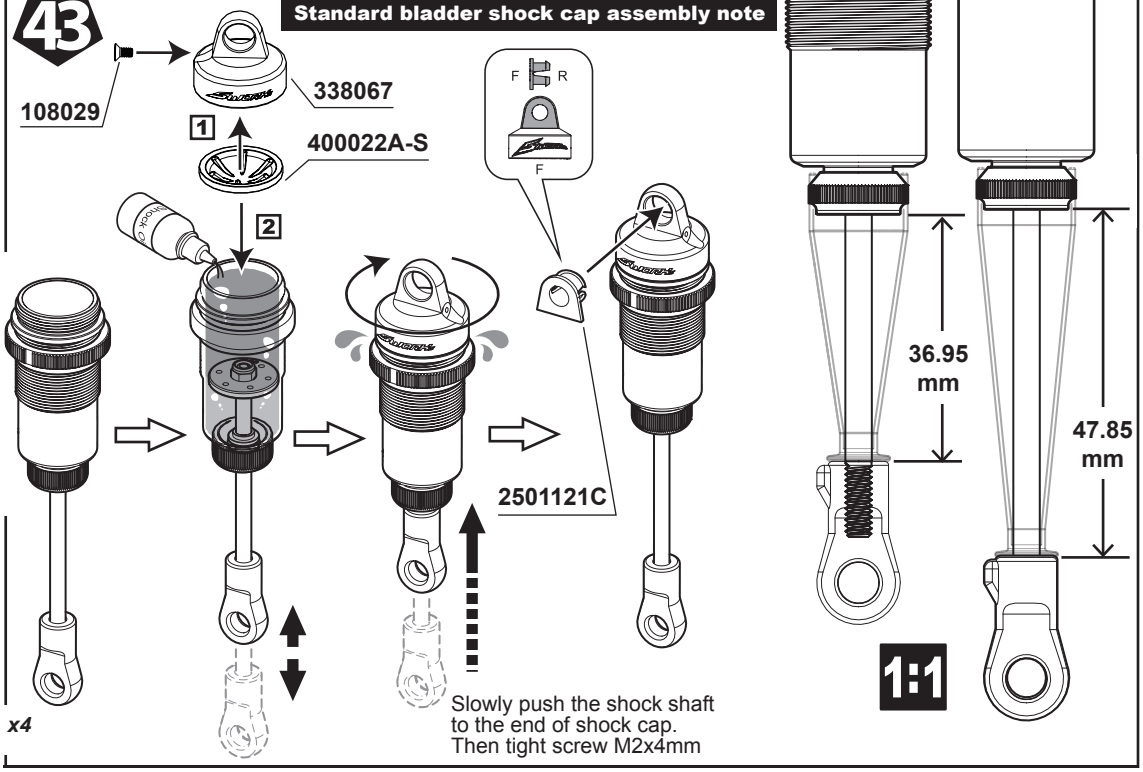

Slowly push the shock shaft to the end of shock cap. Then tight screw M2x4mm

44

F/R x2 For Front x2 For Rear



115170
S350 BBS Option Shock SpringB-1(90X1.4X7.5) x2



115168
S350 BBS Option Shock SpringA-1(75X1.4X6.5) x2

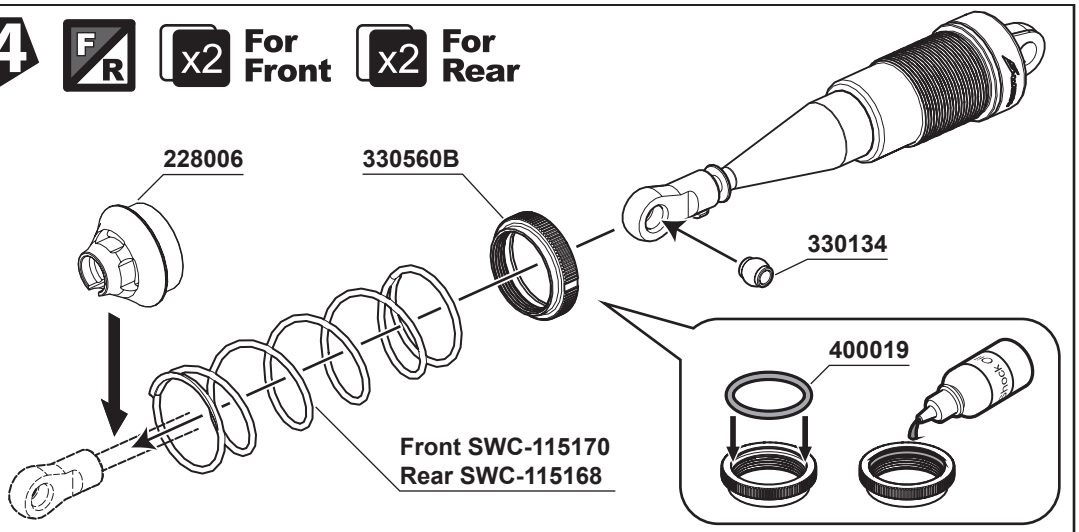

BAG K

330635(L)
S350 New BBS System +5.5mm Shock Shaft (L) x2

330636(S)
S350 New BBS System +1.3mm Shock Shaft (S) x2

103004
M2.5mm Nut Lock x4

210058
Shock Seal Washer 3.5X7X1.0mm x4

210058
Shock Seal Washer 3.6X7X2.5mm x8

101011
M2.6x6xT0.6mm x4

210058
Shock Seal O-Ring x8

400020
Shock Seal O-Ring x4

400019
Shock Spring Adjust Nut O-Ring x4

108029
M2.0x4.6mm FH/ST HEX Screw (1.5mm HexHead) x4

42 F/R x2 For Front x2 For Rear

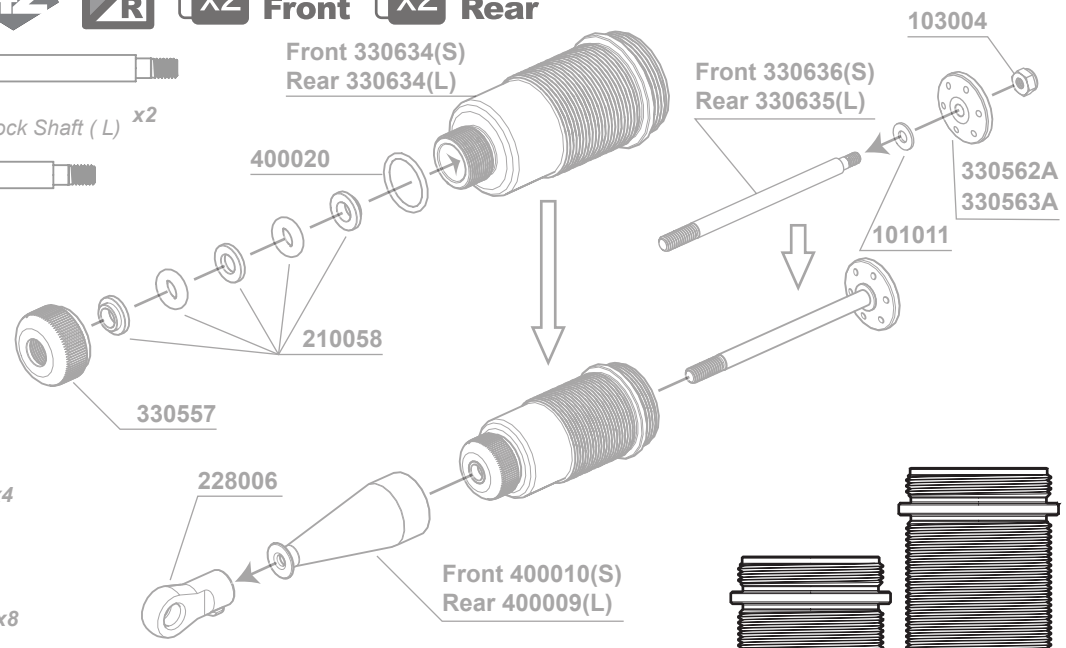

43 Emulsion shock cap system assembly note

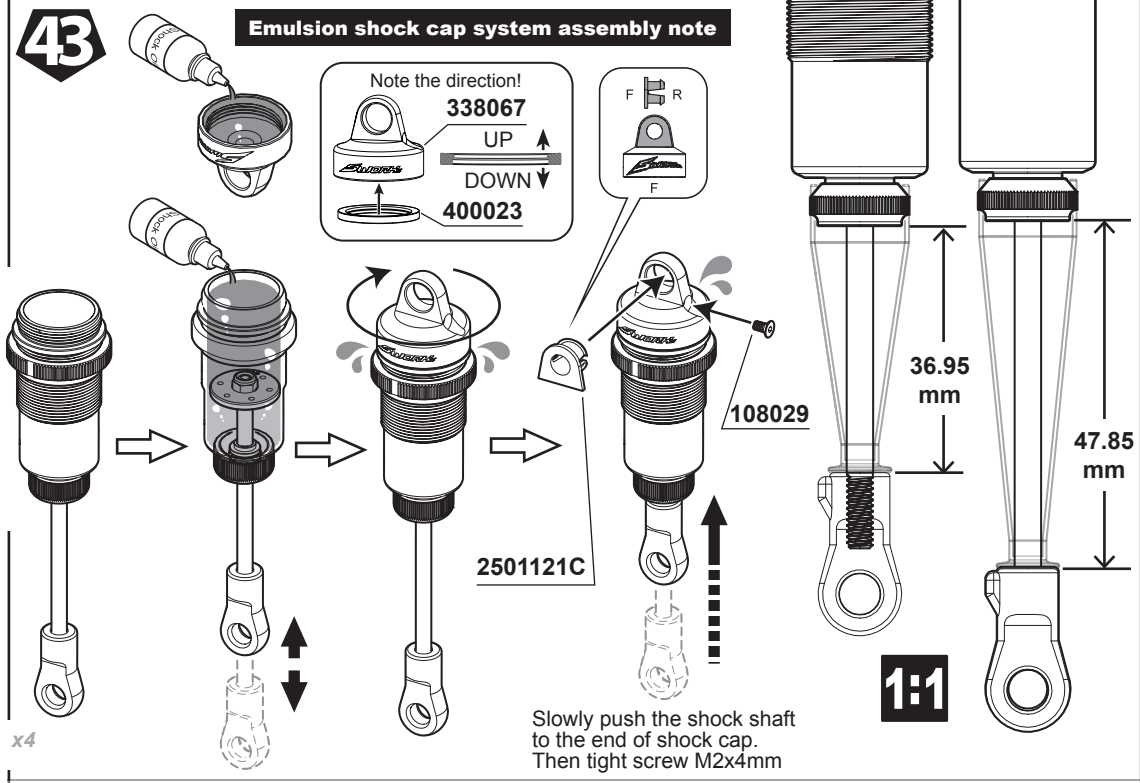

Slowly push the shock shaft to the end of shock cap.
Then tight screw M2x4mm

44 F/R x2 For Front x2 For Rear

115170
S350 BBS Option Shock SpringB-1(90X1.4X7.5) x2

115168
S350 BBS Option Shock SpringA-1(75X1.4X6.5) x2

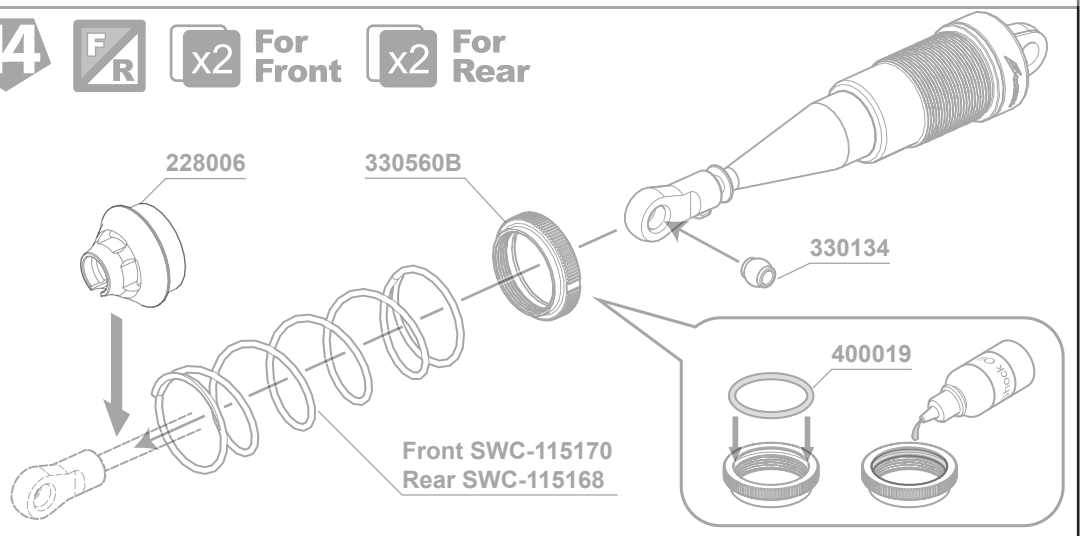

BAG J



105006A
M3x28mm Cap Screw ***x2***



105013A
M3x25mm Cap Screw ***x2***

45

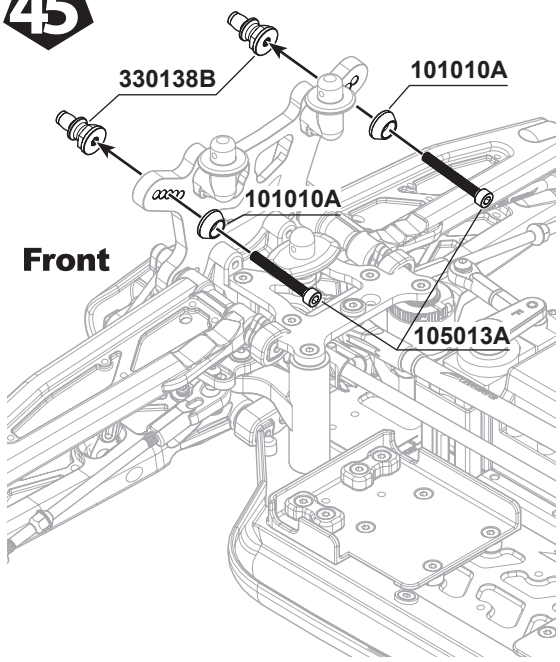

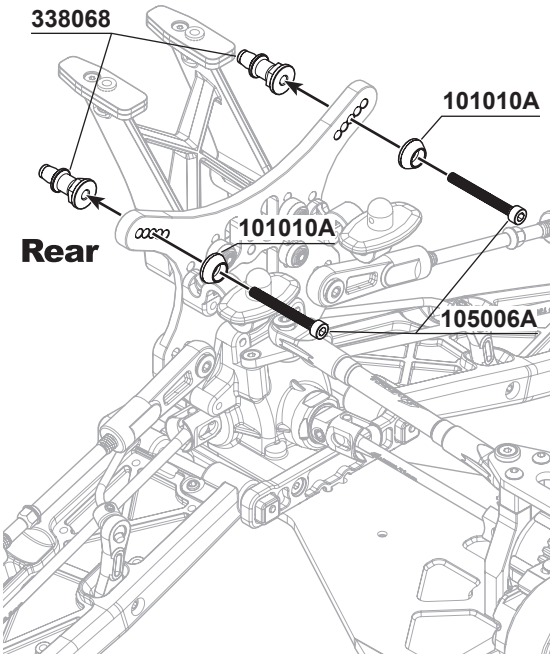

46



103003A
Flange M3 Nut Lock ***x4***

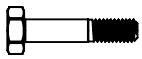

330243
SWORKz 3x16mm Shock Hex Screw Clockwise ***x2***

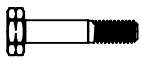

330243
SWORKz 3x16mm Shock Hex Screw Anti-Clockwise ***x2***

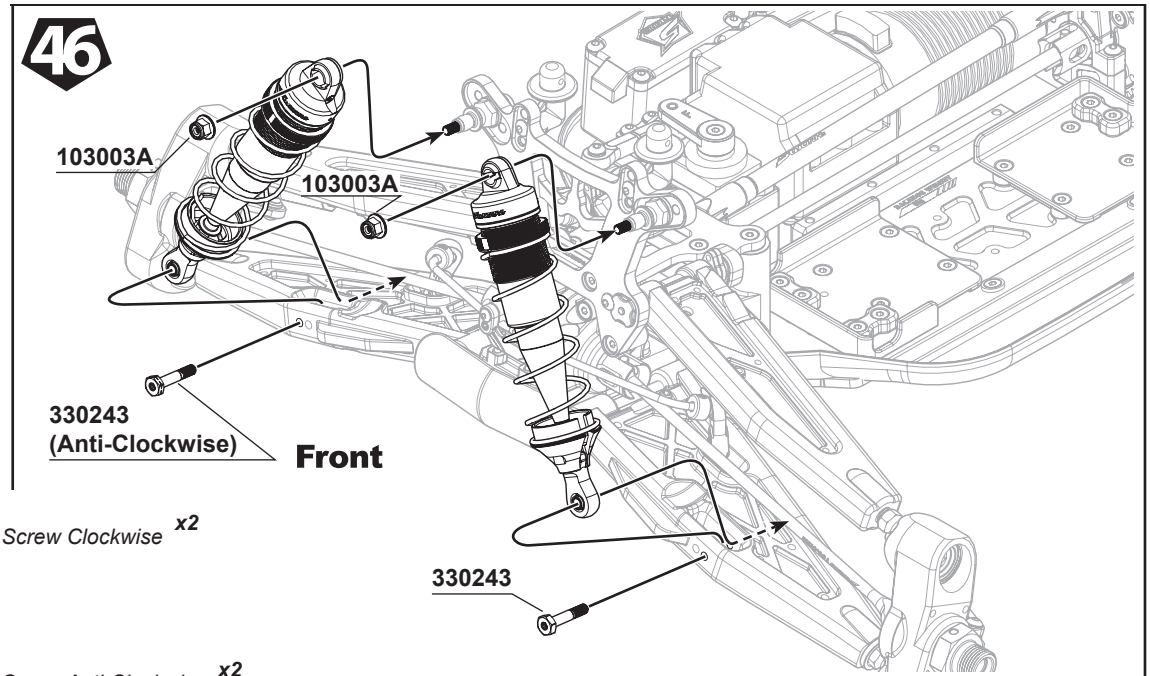

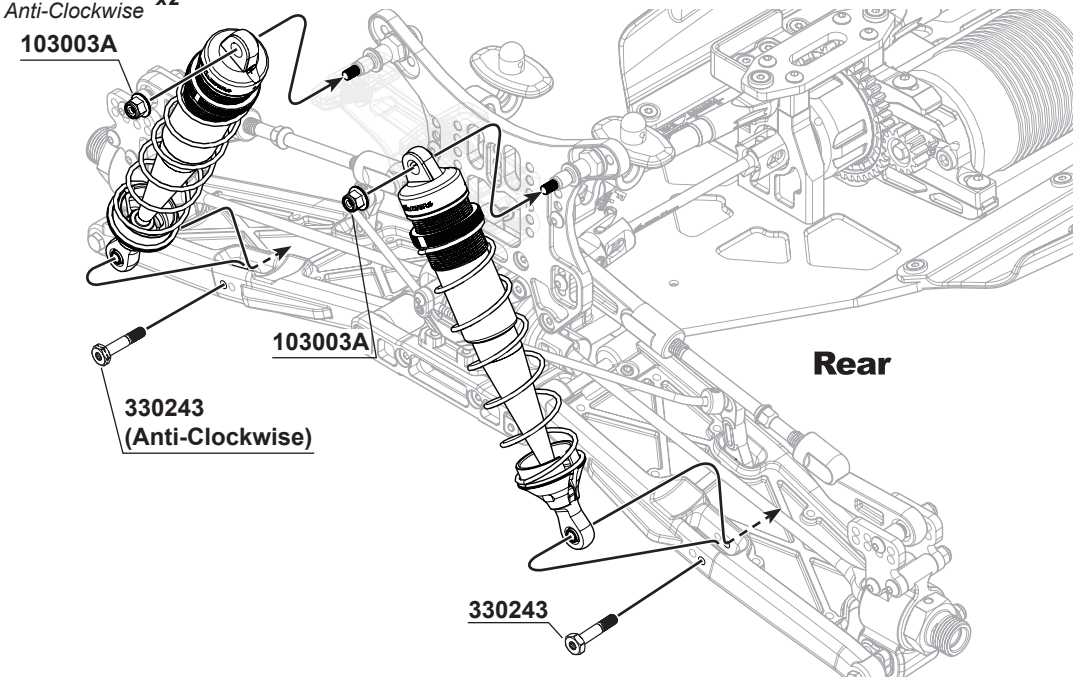

47



105005
M3x12mm Cap Screw **x2**



106025
M2.5x8mm Hex Socket OH/TP Screw **x5**

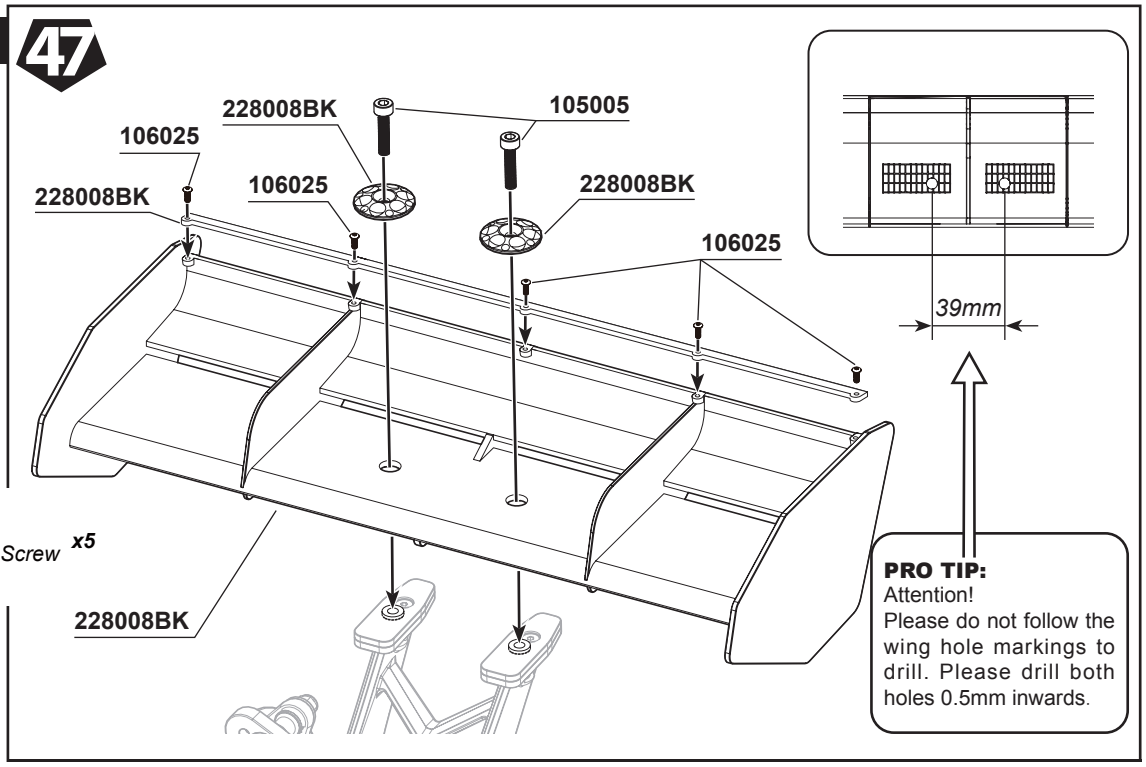

PRO TIP:
Attention!
Please do not follow the wing hole markings to drill. Please drill both holes 0.5mm inwards.

48

L R

330122A
Wheel Nut **x4**

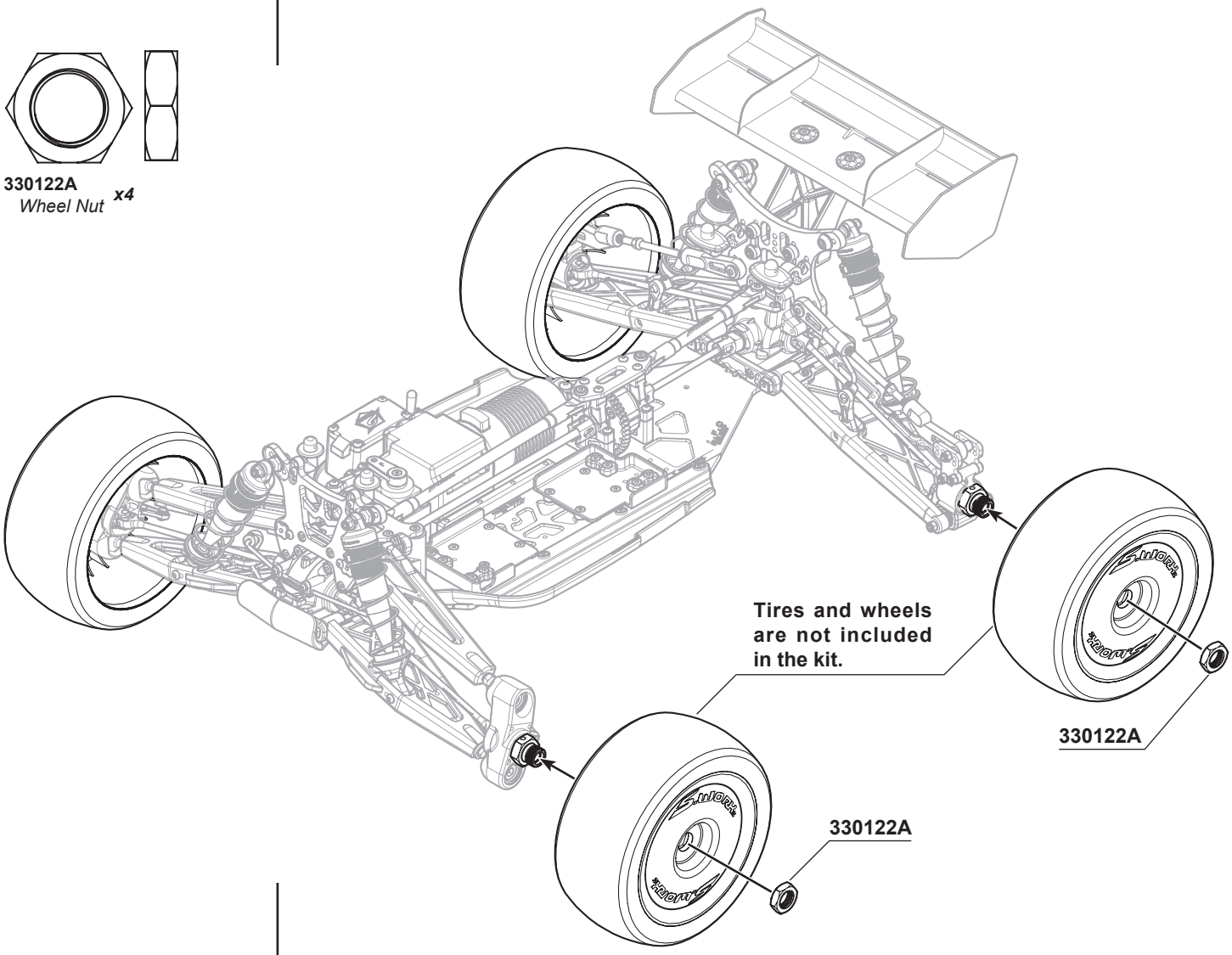

49

Attention!
The S35-T2e body post positions are different as of the body shell's. Please check the “RED DOTs” marked on the body shell. Or follow the manual's instructions for the actual body posts positions.

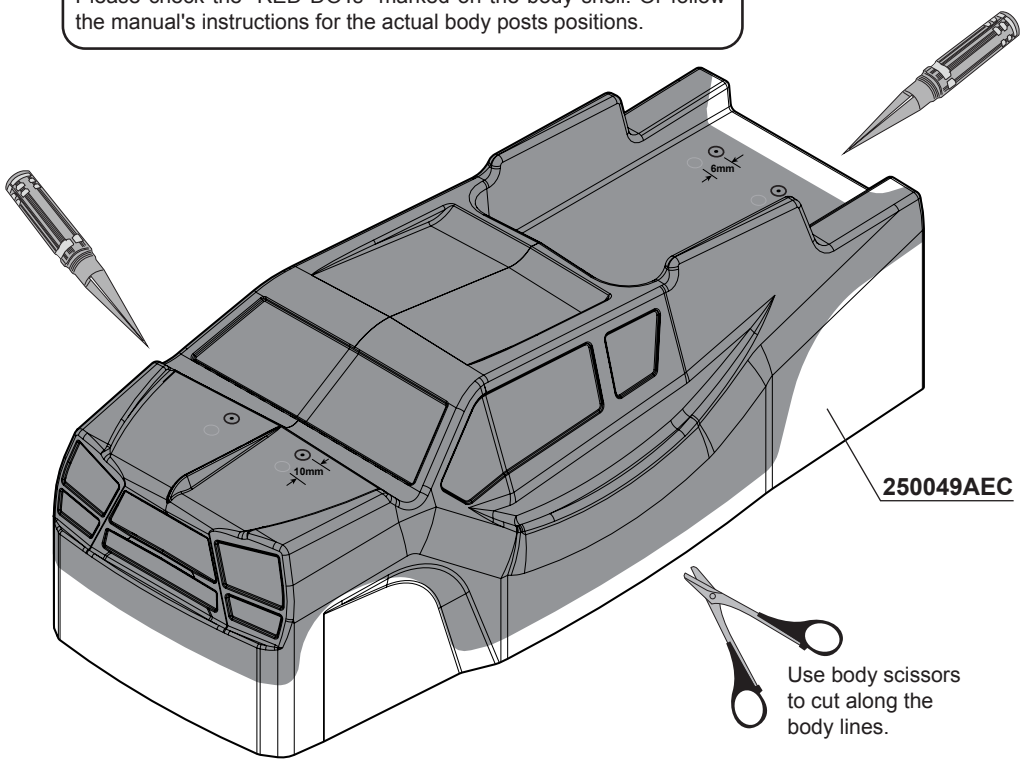

50

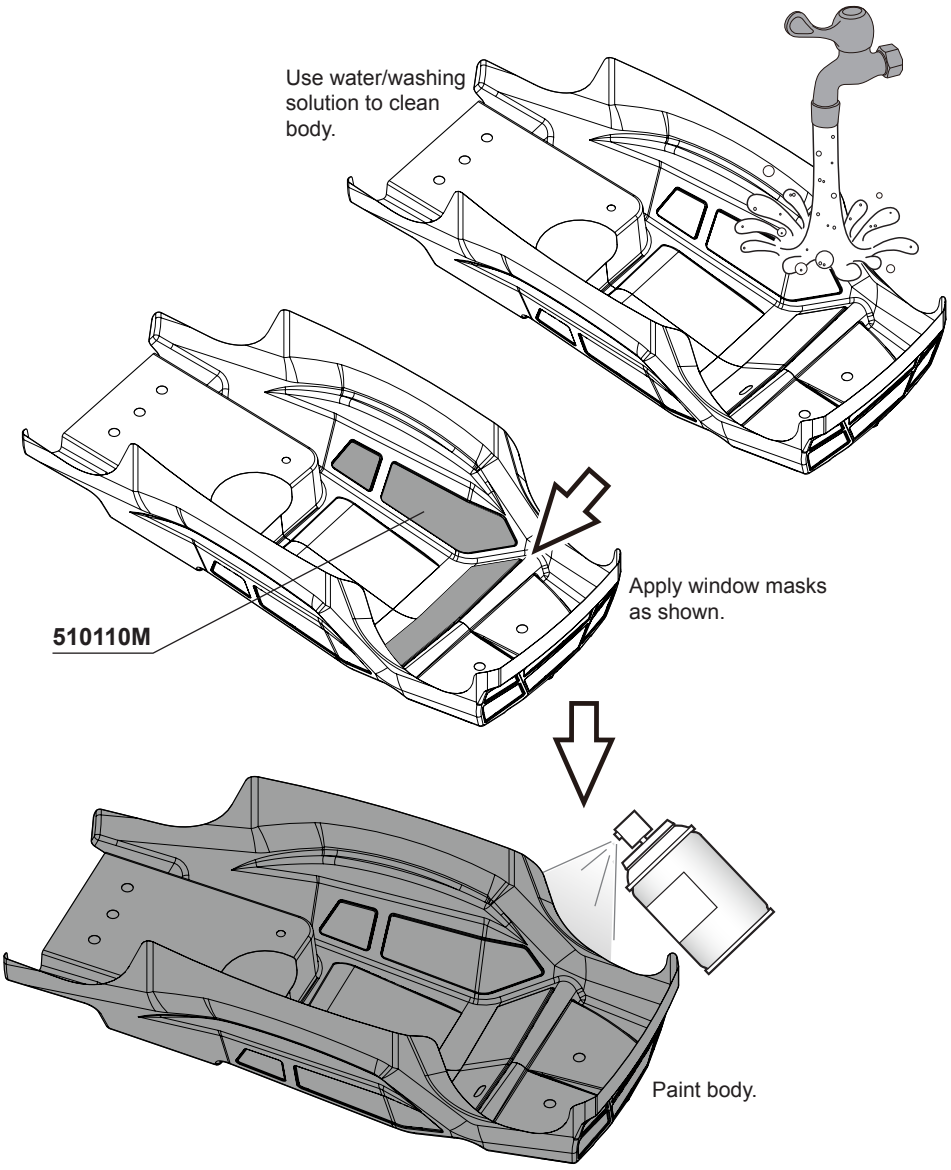

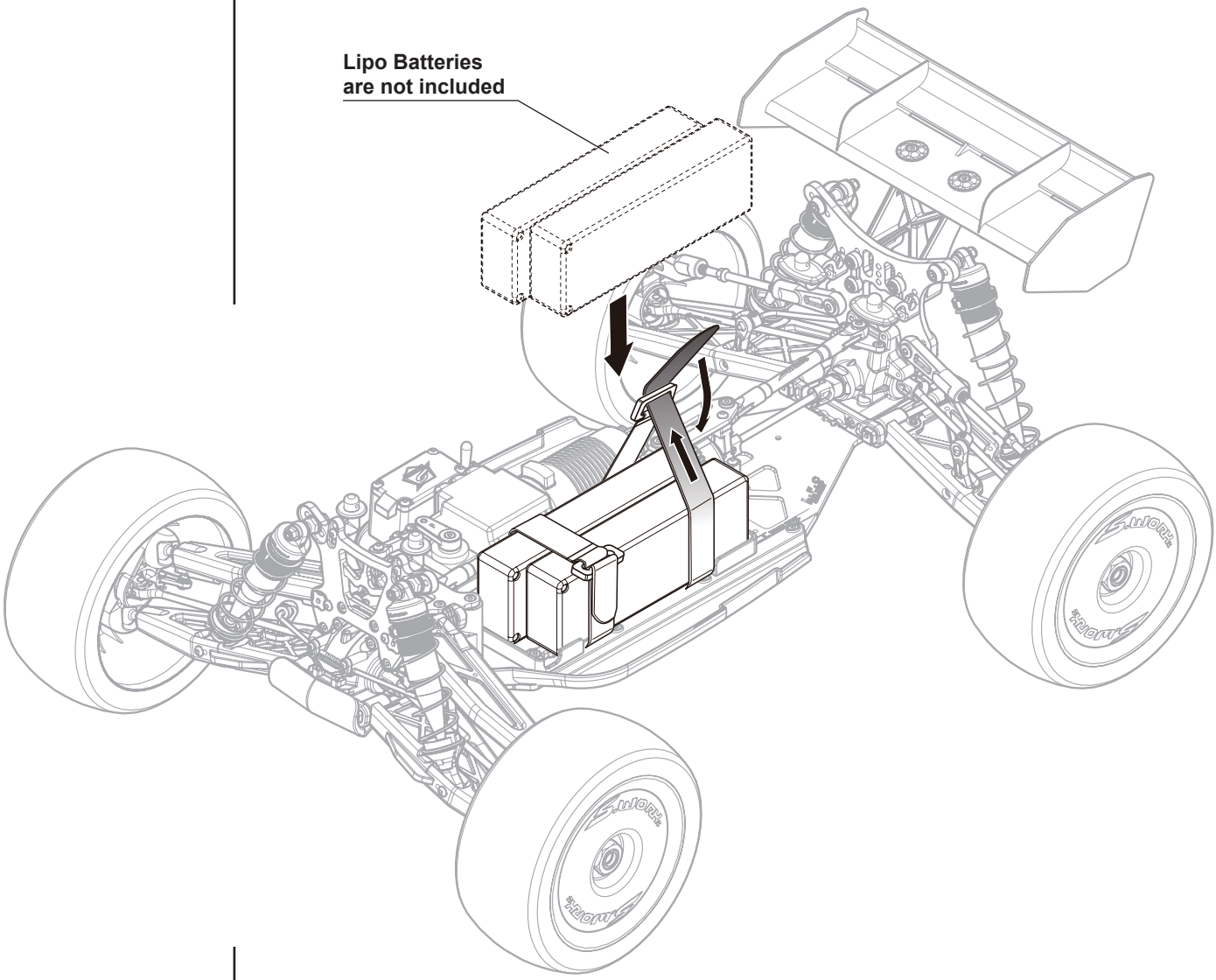
Lipo Batteries
are not included

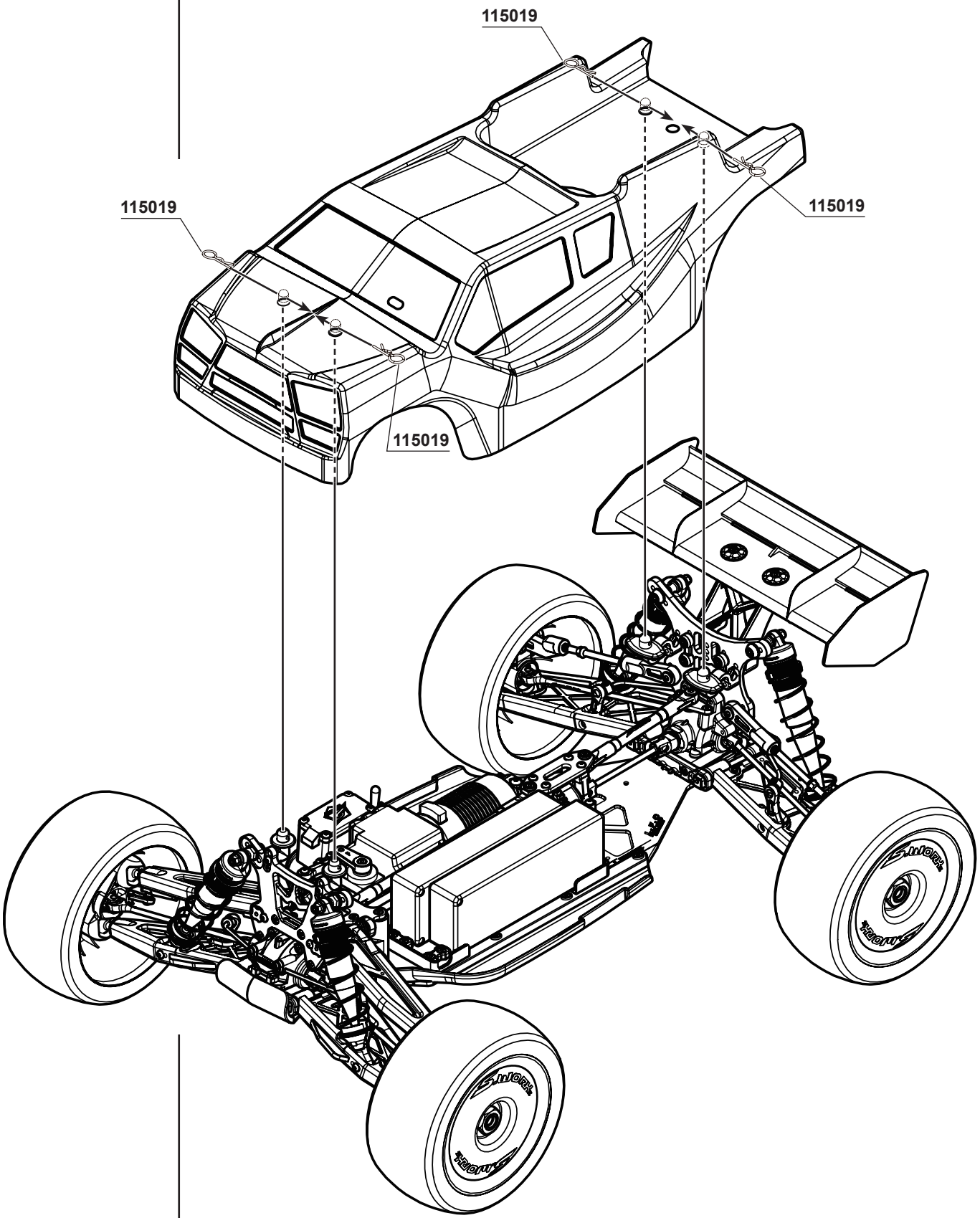
115019
115019
115019
115019

S35-T2e 1/8 OffRoad Brushless Power Pro Truggy

SWORKz www.sworkz.com

SET-UP SHEET

Race time / Lap: _____

Best lap: _____

Name: SWORKz
Date: _____
Track: _____

Diff. Oil
Front: 15000
Center: 15000
Rear: 5000

Track Conditions
Size: ☑ Open ☐ Med. ☐ Tight
Traction: ☐ High ☑ Med. ☐ Low
Surface: ☐ Smooth ☐ Med. ☑ Bumpy

Tire
Front T-Pro **Type:** 3401-T3 **Foam:** T-Pro
Rear T-Pro **Type:** 3401-T3 **Foam:** T-Pro

Electric System
ESC Type: Maclan MMax8 1/8 Competition Sensored 200A ESC
Motor Type: Maclan MR8.3 2100KV
Motor Gear/Spur Gear: 15/48
Battery Type A: Standard Pack _____ B: Shorty Pack _____

Front Suspension

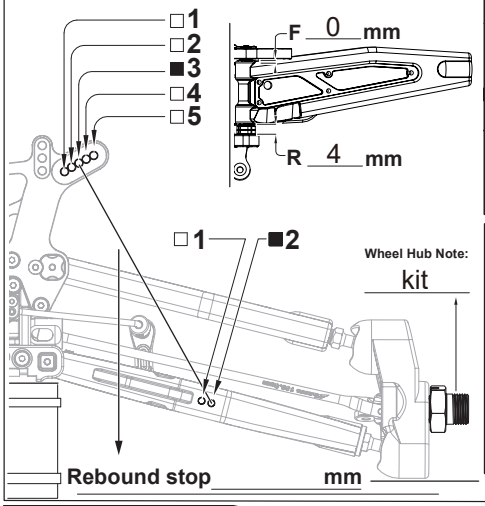

Front Toe-In

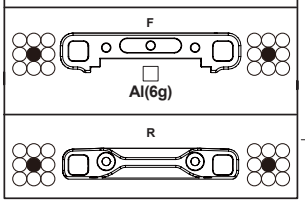

mm

Front Roll Center

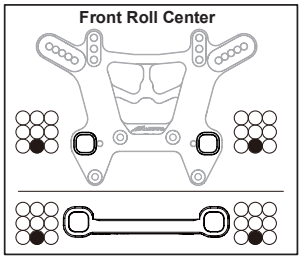

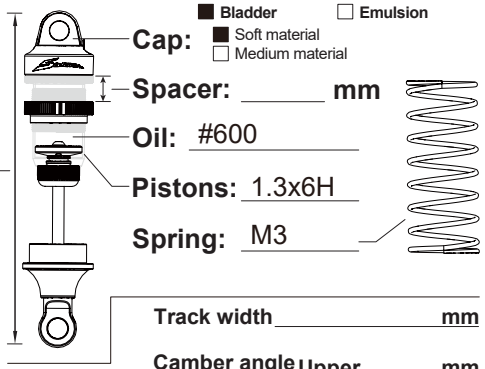

Track width _____ mm

Camber angle Upper _____ mm Lower _____ mm

Toe angle _____ °

Sway bar ■Use 2.2 mm ☐None

Camber Angle
L: 1 °
R: 1 °

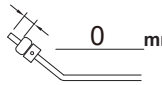

Front Ride Height
Chassis
8 mm
Ground

Notes: _____

Rear Suspension

Rear Toe-In

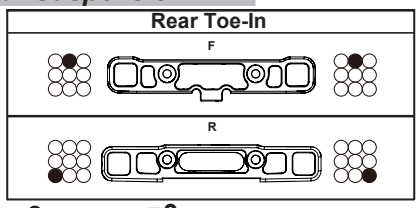

Steering Ackerman

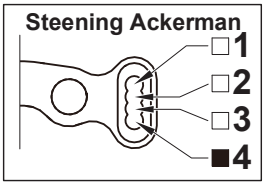

Body: SWORKz RS3
Wing: Standard

Wing Position
☐H ■M ☐L
☐H ■M ☐L
Wing Angle: 0 °

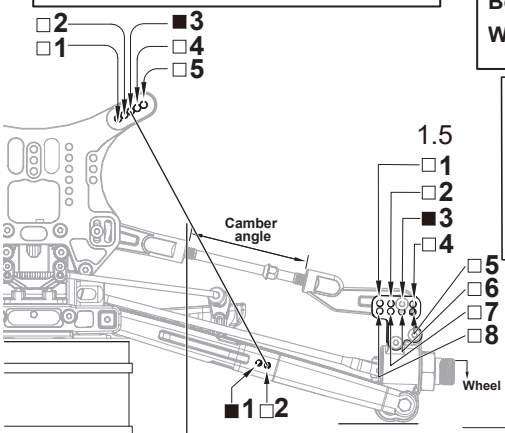

Upper arm position

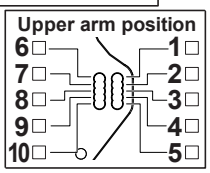

Rear Ride Height
Chassis
_____ mm
Ground

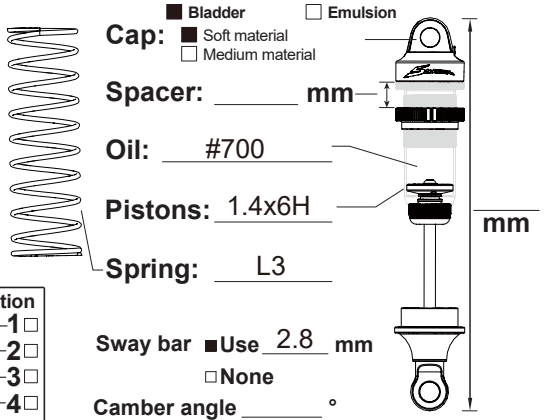

Sway bar ■Use 2.8 mm ☐None

Camber angle _____ °

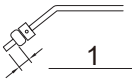

Notes: _____

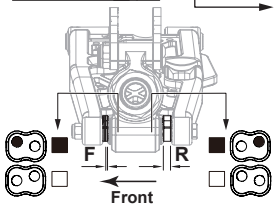

Wheelbase adjustment
F 5 mm
R 0 mm

C ■ Brass(15g) x 1
A ■ Brass(15g) x 1 D ☐ Brass(15g) x ___
B ■ Brass(15g) x 1 E ☐ Brass(15g) x ___

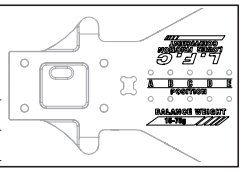

Option Parts List

Front Upper Arm

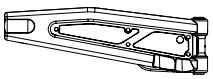

Carbon Cover 1 mm

Front Lower Arm

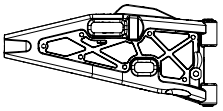

Carbon Cover 0 mm

Rear Lower Arm

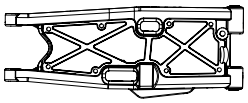

Carbon Cover 0 mm

S35-T2e

1/8 OffRoad Brushless Power Pro Truggy

SWORKZ www.sworkz.com

SET-UP SHEET

Race time / Lap: _____

Best lap: _____

Name: _____

Date: _____

Track: _____

Diff. Oil

Front: _____

Center: _____

Rear: _____

Track Conditions

Size: □ Open □ Med. □ Tight

Traction: □ High □ Med. □ Low

Surface: □ Smooth □ Med. □ Bumpy

Tire

Front	Rear
Type: _____	Type: _____
Foam: _____	Foam: _____

Electric System

ESC Type: _____

Motor Type: _____

Motor Gear/Spur Gear: _____

Battery Type

A: Standard Pack _____

B: Shorty Pack _____

Front Suspension

□1 □2 □3 □4 □5

F ____ mm

R ____ mm

□1 □2

Wheel Hub Note: _____

Rebound stop _____ mm

Front Toe-In

F

□ Al(6g)

R

mm

Front Roll Center

□ Bladder □ Emulsion

Cap: □ Soft material □ Medium material

Spacer: _____ mm

Oil: _____

Pistons: _____

Spring: _____

Track width _____ mm

Camber angle Upper _____ mm

Lower _____ mm

Toe angle _____ °

Sway bar □Use _____ mm

□None

Camber Angle

L: _____ °

R: _____ °

_____ mm

Front Ride Height

Chassis

_____ mm

Ground

Steering Ackerman

□1 □2 □3 □4

Notes: _____

Rear Suspension

Rear Toe-In

F

R

□2 □1 □3 □4 □5

□1 □2 □3 □4 □5 □6 □7 □8

Camber angle

□1 □2

Wheel Hub Note: _____

Rebound stop _____ mm

Body: _____

Wing: _____

Wing Position

□H □M □L □H □M □L

Wing Angle: _____ °

Upper arm position

6□ 7□ 8□ 9□ 10□ — 1□ 2□ 3□ 4□ 5□

Rear Ride Height

Chassis

_____ mm

Ground

□ Bladder □ Emulsion

Cap: □ Soft material □ Medium material

Spacer: _____ mm

Oil: _____

Pistons: _____

Spring: _____

mm

Sway bar □Use _____ mm

□None

Camber angle _____ °

_____ mm

Wheelbase adjustment

F ____ mm

R ____ mm

Front

A □ Brass(15g) x ___

B □ Brass(15g) x ___

C □ Brass(15g) x ___

D □ Brass(15g) x ___

E □ Brass(15g) x ___

Notes: _____

Option Parts List

Front Upper Arm

Carbon Cover

_____ mm

Front Lower Arm

Carbon Cover

_____ mm

Rear Lower Arm

Carbon Cover

_____ mm

Parts No. List

Part No.	Part Name	Q`ty in Use	Item No.
210091	S35-3W Plastic Front/Rear Big Bore Diff Case	2	SW-210091
210079A	S35-4 Plastic Center Big Bore HET Diff Case	1	SW-210079A
2501097B	S35 Series Front Bumper	1	SW-2501097B
2501121C	S35/S350 Series Ball End Set with Shock Plastic Parts	2	SW-2501121C
2501122B	S35/S350 Series Settring Bellcrank Set 2.0 Set (with Servo Horn)	1	SW-2501122B
2502040-02	S350T Body Mount with Fuel Tank Ring-pull	1	SW-2502040-02
2503221BK	S35-2E/3E Series Black Plastic Radio Box/Battery Case	1	SW-2503221BK
2503260	S353 Series Plastic Inserts Set	1	SW-2503260
2503261A	S35-3/GT Series Gear Box Set (Fit 5x13x4mm Ball Bearing)	2	SW-2503261A
2503264A	S35-3 Series Front Steering Knuckle (Type 2.0) L	1	SW-2503264A
2503270-3	S35-3 Series Front Steering Ball Ends	2	SW-2503270-3
228001	S35-4 Series Plastic Inserts Set	2	SW-228001
228002-1	S35-4 Series Plastic Rear Wheel Hub (R=L)	2	SW-228002-1
228003A	S35 Series Integrated Wing Mount Set 2.0	1	SW-228003A
228004A	S35-4 Series Plastic Side Guard Set with Stopper	1	SW-228004A
228006	S35 Series Shock End/Body Mount/Ball Ends Set	2	SW-228006
228007	S35-4E Buggy Series Steering Servo Mount/Center Diff Mount Plastic Parts	1	SW-228007
228008BK	SWORKz 1/8 Off Road Formula 2.0 Race Wing (BK)	1	SW-228008BK
228010-F	S35-T2 Series Front Lower Arm	2	SW-228010-F
228010-R	S35-T2 Series Rear Lower Arm	2	SW-228010-R
228011	S35-T2 Series Front Upper Arm	2	SW-228011
210058	S350 New BBS System Shock Seal Washer 3.6X7X2.5mm	8	SW-210058
210058	S350 New BBS System Shock Seal Washer 3.5X7X1.0mm	4	SW-210058
218018	S35-T2 Series Universal Cross Drive Shaft Set 136.5mm	4	SW-218018
200193	Antenna Tube	1	SW-200193
250049AEC	S35-T2e Speed Rhinocero III Pre-Cut EP Body Shell (Clean/1.5mm)	1	SW-250049AEC
328001	S35-3W Diff. Bevel Gear 20T	6	SW-328001
328001	S35-3W Diff. Bevel Gear 10T	12	SW-328001
330015	Pin M2.2x9.9mm	6	SW-330015
330114A	S350 Sseries Servo Saver Post (HC)	1	SW-330114A
330117A	S350 Series Knuckle Pivot Ball Washer(GM)	2	SW-330117A
330118A	S350 Series Knuckle Pivot Ball Nut(GM)	4	SW-330118A
330119	Front Upper Arm HingPin	2	SW-330119
330121A	S350 Wheel Hub(HC)	4	SW-330121A
330122A	S350 Wheel Nut (HC)	4	SW-330122A
330124	Pin M3.0x16.8mm	4	SW-330124
330125	Rear Upper Sus. Arm Ball Stud	2	SW-330125
330134	Shock Ball Stud	9	SW-330134
330136	Sway Bar Ball Stud	4	SW-330136
330138B	S350 EVO Aluminum Shock Cap Stud (-1.3mm)	2	SW-330138B
330243	SWORKz 3x16mm Shock Hex Screw Clockwise	2	SW-330243
330243	SWORKz 3x16mm Shock Hex Screw Anti-Clockwise	2	SW-330243
330245	BE1 Motor Gear 15T	1	SW-330245
330252	S350 BX1/BR1 Steering Knuckle Pivot Ball Turnbuckle	4	SW-330252
330458	S350T Rear Upper Arm Turnbuckle M5x72mm	2	SW-330458
330557	S350 New BBS System Shock Seal Cap (GM)	4	SW-330557
330560B	S35 New BBS System Shock Spring Adjust Nut (BK)	4	SW-330560B
330661A	S35-T/S35 Series Competition Center Drive Join (5mm set screw)	2	SW-330661A
330562A	S350 New BBS System Shock Piston 1.3mmX6 Holes (BK)	2	SW-330562A
330563A	S350 New BBS System Shock Piston 1.4mmX6 Holes (BK)	2	SW-330563A
330633	S350 BBS System +5.6mm Shock Body L (HD)	2	SW-330633
330634	S350 BBS System +5mm Shock Body S (HD)	2	SW-330634
330635	S350 New BBS System +5.5mm Shock Shaft (L)	2	SW-330635
330636	S350 New BBS System +1.3mm Shock Shaft (S)	2	SW-330636
330694A	S35 E Series 6mm Steel Ball Stud	1	SW-330694A
330699B	S35-2E/3E Center Main Drive Shaft (L)	1	SW-330699B
330777A	S35-4 Series Steering Linkage Ball Stud 7mm (L7)	4	SW-330777A
330782	S35-3 Series Rear Hub Carriers Hinge Pin	2	SW-330782
338011	S35 series Pinion Gear Stopper (5x7x5.1mm)	2	SW-338011
338014	S35-3W T-7075AL Rear Lower Fully Adjustable Toe-In Block (3 degree)	1	SW-338014
338025	S35-3W Bevel Gear Shaft	6	SW-338025
338027	S35-3W Front/Rear Diff. Outdrive	4	SW-338027
338028	S35-3W Center Diff. Outdrive	2	SW-338028
338038A	S35-3E/S35-2E/Apollo Series Roll Bar Brace	1	SW-338038A
338041	S35-3/4 Series Center HET Spur Gear (48T)	1	SW-338041
338043	S35-3/4 Series Servo Saver Nut with Screw Fixed	1	SW-338043
338045	S35-T Series HET System Pinion Gear 10T	2	SW-338045
338046	S35-T Series HET System Crown Gear 46T	2	SW-338046
338048	S35-4 Series Servo Saver Shaft	2	SW-338048
338049	S35-4 Series T7 Aluminum Rear Front Lower Suspension Plate (RF)	1	SW-338049
338051	S35-4 Series T7 Aluminum Steering Knuckle Plate (R=L)	2	SW-338051
338052	S35-4 Series T7 Aluminum Settring Bellcrank Upper Part-A (with 2Hole)	1	SW-338052
338053	S35-4 Series T7 Aluminum Steering Plate	1	SW-338053
338056	S35-4 Series Lower Arm Hinge Pin (68.5mm)	4	SW-338056
338057	S35-4 Series T7 Aluminum Front Upper Arm Holder	1	SW-338057
338058	S35-4 Series T7 Aluminum Front Lower Arm Plate (FF)	1	SW-338058
338059	S35-4 Series T7 Aluminum Front Lower Arm Holder (FR)	1	SW-338059
338065	S35-4 E-Buggy Series T7 Aluminum Motor Mount	1	SW-338065
338066	S35-4 E-Buggy Series T7 Aluminum Center Diff Mount (CF)	1	SW-338066
338067	S35-4 Series Emulsion/Bladder 2 Ways Syatem Shock Cap	4	SW-338067
338068	S35-4 Series T7 Aluminum Shock Stud (L)	2	SW-338068
338070B	S35 Series Rear Upper Sus. Arm Ball Stud (7.0mm Hex)	2	SW-338070B
338085	S35-T2/E T7075 Aluminum Front Shock Tower	1	SW-338085
338086	S35-T2/E T7075 Aluminum Rear Shock Tower	1	SW-338086
338088	S35-T2e T7075 Aluminum Lightened Main Chassis	1	SW-338088
338089	S35-T2/E Steering Linkage Turnbuckle M4x80mm	2	SW-338089
338090	S35-T2E Steel Center Front Drive Shaft 71mm	1	SW-338090
338091	S35-T2E T7075 Rear Roll Bar Brace	1	SW-338091
340015	S35-3E/S35-2E/Apollo Series Carbon Fiber Rear Brace Mount	1	SW-340015
340016	S35-4 Series Pro-composite Carbon Rear Wheel Hub Adjust Plate (R=L)	4	SW-340016

Part No.	Part Name	Q`ty in Use	Item No.
340017	S35-4 Series Pro-composite Carbon Steering Bellcrank Plate	1	SW-340017
340018	S35-4E Series Pro-composite Carbon Center Diff. Plate	1	SW-340018
340028-10	S35-T2 Pro-composite Carbon Front Upper Arm Cover (1.0mm)(2pc)	2	SW-340028-10
400002	O-ring S5 4.8X1.5	6	SW-400002
400005	Shock Spring Adjust Nut O-Ring	4	SW-400005
400006	shock seal O-Ring	8	SW-210058
400009	Shock Boot (L)	2	SW-400009
400010	Shock Boot (S)	2	SW-400010
400013	S104 Shock Seal O-ring 2x2.7mm	4	SW-400013
400019	S350 New BBS System Shock Spring Adjust Nut O-Ring	4	SW-400019
400020	S350 New BBS System Shock Seal O-Ring	4	SW-400020
400022A-S	S35 Series BBS System Pro Shock Bladder (Soft)	4	SW-40022A-S
400023	S35 Series BBS System Seal O-Ring for Emulsion Shock Cap	4	SW-400023
420010	Antenna Cup	1	SW-420010
510080A	SWORKz 1/8 Off Road Formula Race Wing Decal	1	SW-228008BK
510091	SWORKz Original Logo Sticker	1	SW-510091
610019	S35-3 Series Servo Saver Spring Dusty Protect Sponge	1	SW-610019
610020	S35-3 Series Center Big Bore Plastic Diff. Case Gasket	1	SW-610020
610023	S35-3W Diff. Gasket (0.4T)	2	SW-610023
115004A	Servo Saver Spring	1	SW-115004A
115019	Body Clip	4	SW-115019
115168	S35 Series Black Competition Rear Shock Spring (L2-Dot)(86X1.6X10.75)	2	SWC-115168
115170	S35 Series Black Competition Front Shock Spring (S3-Dot)(70X1.6X8.5)	2	SWC-115170
116004R	Ball Bearing 6x10x3mm (Red Rubber Case)	4	SW-116004R
116006R	Ball Bearing 8x16x5mm (Red Rubber Case)	14	SW-116006R
116019R	Ball Bearing 5x13x4mm (Red Rubber Case)	4	SW-116019R
117003	Flange Ball Bearing 3x6x2.5mm	4	SW-117003
118001-24	S35-T2/T2e Front Sway Bar 2.4mm	1	SW-118001-24
118001-26	S35-T2/T2e Front Sway Bar 2.6mm	1	SW-118001-26
118002-26	S35-T2/T2e Rear Sway Bar 2.6mm	1	SW-118002-26
118002-28	S35-T2/T2e Rear Sway Bar 2.8mm	1	SW-118002-28
101004	Washer 3.5X10X0.2mm	12	SW-101004
101010A	M3 Countersunk Washer(GM)	4	SW-101010A
101011	M2.6x6xT0.6mm	4	SW-101011
101012	M3x6xT0.6mm	4	SW-101012
101018	SHIM 13x16x0.2mm	12	SW-101018
101019	SHIM 6.0x10.0x0.2mm	1	SW-101019
101020A	S350 Sries 3mm Countersunk Washers (GM)	5	SW-101020A
101021	M3x8xT0.8mm	2	SW-101021
101039	Steel Washer 5x12x0.3mm	6	SW-101039
103001	M3 Nut Lock	17	SW-103001
103003A	Flange M3 Nut Lock (GM)	4	SW-103003A
103004	M2.5mm Nut Lock	4	SW-103004
104004	M3x3mm Set Screw	4	SW-104004
104005	M3x4mm Set Screw	4	SW-104005
104009	M3x16mm Set Screw	1	SW-104009
104010	M5x4mm Set Screw (Flat Bottom)	6	SW-104010
104011	M4x4mm Set Screw (Flat Bottom)	1	SW-104011
105001	M3x8mm Cap Screw	1	SW-105001
105005	M3x12mm Cap Screw	2	SW-105005
105006A	M3x28mm Cap Screw full thread	2	SW-105006A
105013A	M3x25mm Cap Screw	2	SW-105013A
105018	M2x6mm Cap Head Screw	1	SW-105018
105020	M4x10mm Cap Screw	2	SW-105020
106001	M3x8mm Hex Soket OH/TP Screw	1	SW-106001
106002	M3x10mm Hex Soket OH/TP Screw	16	SW-106002
106003	M3x16mm Hex Soket OH/TP Screw	4	SW-106003
106006	M3x20mm Hex Soket OH/TP Screw	2	SW-106006
106007	M3x12mm Hex Soket OH/TP Screw(HT)	2	SW-106007
106008	M3x12mm Hex Soket OH/TP Screw	8	SW-106008
106009	M3x25mm Hex Soket OH/TP Screw	6	SW-106009
106013	M2.5x8mm 1.5mmHex Soket OH/ST Screw	6	SW-106013
106015	M3x5mm Hex Soket OH/TP Screw	2	SW-106015
106020	M2.5x5mm 1.5mmHex Soket OH/ST Screw	10	SW-106020
106021A	S35 Series M4x10mm Hex Soket OH/TP Set Screw	4	SW-106021A
106024	M4x12mm Hex Soket OH/TP Screw	2	SW-106024
106025	M2.5x8mm Hex Soket OH/TP Screw	5	SW-228008BK
108001	M3x12mm FH/ST HEX Screw	24	SW-108001
108003	M3x10mm FH/ST HEX Screw	29	SW-108003
108006	M3x8mm FH/ST HEX Screw	19	SW-108006
108007	M3x6mm FH/ST HEX Screw	14	SW-108007
108008	M3x35mm FH/ST HEX Screw	4	SW-108008
108010	M4x10mm FH/ST HEX Screw	4	SW-108010
108012	M4x16mm FH/ST HEX Screw	8	SW-108012
108019	M2.6x6mm FH/ST HEX Screw	2	SW-108019
108029	M2.0x4.6mm FH/ST HEX Screw (1.5mm HexHead)	4	SW-108029

Spare Part List

Item No.	Part Name
SW-2501097B	S35 Series Front Bumper (2PC))
SW-2501121C	S35/S350 Series Ball End Set with Shock Plastic Parts
SW-2501122B	S35/S350 Series Settring Bellcrank Set 2.0 Set (with Servo Horn)
SW-2502040-02	S350T Body Mount with Fuel Tank Ring-pull
SW-2503260	S353 Series Plastic Inserts Set
SW-2503261A	S35-3/GT Series Gear Box Set (Fit 5x13x4mm Ball Bearing)
SW-2503264A	S35-3 Series Front Steering Knuckle (Type 2.0)
SW-2503270-03	S35-3 Series Front Steering Ball Ends (4pc)
SW-228001	S35-4 Series Plastic Inserts Set (2Set)
SW-228002-1	S35-4 Series Plastic Rear Wheel Hub (R=L)(2PC)
SW-228003A	S35 Series Integrated Wing Mount Set 2.0
SW-228004A	S35-4 Series Plastic Side Guard Set with Stopper
SW-228006	S35 Series Shock End/Body Mount/Ball Ends Set (2Set)
SW-228007	S35-4E Buggy Series Steering Servo Mount/Center Diff Mount Plastic Parts
SW-228008BK	SWORKz 1/8 Off Road Formula 2.0 Race Wing (BK)
SW-228010-F	S35-T2 Series Front Lower Arm (1PC)
SW-228010-R	S35-T2 Series Rear Lower Arm (1PC)
SW-228011	S35-T2 Series Front Upper Arm (1PC)
SW-200193	Antenna Tube
SW-210058	S350 series BBS Shock Seal Kit
SW-210079A	S35-4 Plastic Center Big Bore HET Diff Case
SW-210091	S35-3W Plastic Front/Rear Big Bore Diff Case
SW-218018	S35-T2/e Series Universal Cross Drive Shaft Set 136.5mm (1PC)
SW-250049AEC	S35-T2e Speed Rhinocero III Pre-Cut EP Body Shell (Clean/1.5mm)
SW-328001	S35-3/4 Series HET Diff. Bevel Gear Set
SW-330015	Pin M2.2x9.9mm
SW-330114A	S350 Sseries Servo Saver Post (HC)
SW-330117A	S350 Series Knuckle Pivot Ball Washer(GM)
SW-330118A	S350 Series Knuckle Pivot Ball Nut(GM)
SW-330119	Front Upper Arm HingPin
SW-330121A	S350 Wheel Hub (HC)
SW-330122A	S350 Wheel Nut (HC)
SW-330124	Pin M3.0x16.8mm
SW-330125	Rear Upper Sus. Arm Ball Stud
SW-330134	Shock Ball Stud 6mmxL6.7
SW-330136	Sway Bar Ball Stud
SW-330138B	S350 Series Aluminum Shock Cap Stud (-1.3mm)(2PC)
SW-330243	SWORKz 3x18mm Shock Hex Screw Set (Anti-Clockwise)
SW-330245	SWORKz 1/8 Motor Pinion Gear 15T
SW-330252	S350 BX1/BR1 Steering Knuckle Pivot Ball Turnbuckle
SW-330458	S350T Rear Upper Arm Turnbuckle M5x72mm
SW-330557	S350 New BBS System Shock Seal Cap (GM)
SW-330560B	S35 New BBS System Shock Spring Adjust Nut (BK)
SW-330562A	S35 Series BBS System Shock Piston 1.3mmX6 Holes (BK)(2PC)
SW-330563A	S35 Series BBS System Shock Piston 1.4mmX6 Holes (BK)(2PC)
SW-330633	S350 BBS System +5.6mm Shock Body L
SW-330634	S350 BBS System +5mm Shock Body S
SW-330635	S350 New BBS System +5.5mm Shock Shaft (L)
SW-330636	S350 New BBS System +1.3mm Shock Shaft (S)
SW-330661A	S35-T/S35 Series Competition Center Drive Join (5mm set screw)
SW-330694A	S35 E Series 6mm Steel Ball Stud
SW-330699B	S35-2E/3E Center Main Drive Shaft (L)
SW-330777A	S35-4 Series Steering Linkage Ball Stud 7mm(L7)(4PC)
SW-330782	S35-3 Series Rear Hub Carriers Hinge Pin
SW-338011	S35-3 series Pinion Gear Stopper (5x7x5.1mm)(4PC)
SW-338014	S35-3W T-7075AL Rear Lower Fully Adjustable Toe-In Block (3 degree)
SW-338025	S35-4 HET Bevel Gear Shaft (2pc)
SW-338027	S35-4 Front/Rear HET Diff. Outdrive (2pc)
SW-338028	S35-4 Center HET Diff. Outdrive (2pc)
SW-338038A	S35-3E/S35-2E/Apollo Series T7075 Roll Bar Brace
SW-338041	S35-3/4 Series Center HET Spur Gear (48T)
SW-338043	S35-3/4 Series Servo Saver Nut with Screw Fixed
SW-338045	S35-T Series HET System Pinion Gear 10T
SW-338046	S35-T Series HET System Crown Gear 46T
SW-338048	S35-4 Series Servo Saver Shaft(2PC)
SW-338049	S35-4 Series T7 Aluminum Rear Front Lower Suspension Plate (RF)
SW-338051	S35-4 Series T7 Aluminum Steering Knuckle Plate (R=L)
SW-338052	S35-4 Series T7 Aluminum Settring Bellcrank Upper Part-A (with 2Hole)
SW-338053	S35-4 Series T7 Aluminum Steering Plate
SW-338056	S35-4 Series Lower Arm Hinge Pin (68.5mm)(2pc)
SW-338057	S35-4 Series T7 Aluminum Front Upper Arm Holder
SW-338058	S35-4 Series T7 Aluminum Front Lower Arm Plate (FF)
SW-338059	S35-4 Series T7 Aluminum Front Lower Arm Holder (FR)
SW-338065	S35-4 E-Buggy Series T7 Aluminum Motor Mount
SW-338066	S35-4 E-Buggy Series T7 Aluminum Center Diff Mount (CF)
SW-338067	S35-4 Series Emulsion/Bladder 2 Ways Syatem Shock Cap (2PC)
SW-338068	S35-4 Series T7 Aluminum Shock Stud (L)(2PC)
SW-338070B	S35 Series Rear Upper Sus. Arm Ball Stud (7.0mm Hex)
SW-338085	S35-T2/E T7075 Aluminum Front Shock Tower
SW-338086	S35-T2/E T7075 Aluminum Rear Shock Tower
SW-338088	S35-T2e T7075 Aluminum Lightened Main Chassis
SW-338089	S35-T2/e Steering Linkage Turnbuckle M4x80mm
SW-340015	S35-3E/S35-2E/Apollo Series Carbon Fiber Rear Brace Mount
SW-340016	S35-4 Series Pro-composite Carbon Rear Wheel Hub Adjust Plate (R=L)(2PC)
SW-340017	S35-4 Series Pro-composite Carbon Steering Bellcrank Plate
SW-340018	S35-4E Series Pro-composite Carbon Center Diff. Plate

Item No.	Part Name
SW-340028-10	S35-T2/e Pro-composite Carbon Front Upper Arm Cover (1.0mm)(2PC)
SW-400002	O-ring S5 4.8X1.5
SW-400005	Shock Spring Adjust Nut O-Ring
SW-400009	Shock Boot (L)
SW-400010	Shock Boot (S)
SW-400013	SWORKz Shock Seal O-ring 2x2.7mm (8PC)
SW-400019	S350 New BBS System Shock Spring Adjust Nut O-Ring (4pc)
SW-400020	S350 New BBS System Shock Seal O-Ring (4pc)
SW-400023	S35-4 Series BBS System Seal O-Ring for Emulsion Shock Cap (4PC)
SW-400022A-S	S35 Series BBS System Pro Shock Bladder (Soft)(8PC)
SW-420010	Antenna Cup
SW-510091	SWORKz Origional Logo Sticker (2PC)
SW-610019	S35-3 Series Servo Saver Spring Dusty Protect Sponge (2pc)
SW-610020	S35-3 Series Center Big Bore Plastic Diff. Case Gasket (3pc)
SW-610023	S35-4 HET Diff. Gasket (0.4T)(4pc)
SW-115004A	Servo Saver Spring
SW-115019	Body Clip
SWC-115168	S35 Series Black Competition Rear Shock Spring (L2-Dot)(86X1.6X10.75)
SWC-115170	S35 Series Black Competition Front Shock Spring (S3-Dot)(70X1.6X8.5)
SW-116004R	Ball Bearing 6x10x3mm (Red Rubber Case)(4PC)
SW-116006R	Ball Bearing 8x16x5mm (Red Rubber Case)(10PC)
SW-116019R	Ball Bearing 5x13x4mm (Red Rubber Case)(4PC)
SW-117003	Flange Ball Bearing 3x6x2.5mm(2pc)
SW-118001-24	S35-T2/T2e Front Sway Bar 2.4mm
SW-118001-26	S35-T2/T2e Front Sway Bar 2.6mm
SW-118002-26	S35-T2/T2e Rear Sway Bar 2.6mm
SW-118002-28	S35-T2/T2e Rear Sway Bar 2.8mm
SW-101004	Washer 3.5X10X0.2mm
SW-101010A	M3 Countersunk Washer(GM)
SW-101011	M2.6x6xT0.6mm
SW-101012	M3x6xT0.6mm
SW-101018	SHIM 13x16x0.2mm
SW-101019	SHIM 6.0x10.0x0.2mm
SW-101020A	S350 Sries 3mm Countersunk Washers (GM)
SW-101021	M3x8xT0.8mm
SW-101039	Steel Washer 5x12x0.3mm
SW-103001	M3 Nut Lock
SW-103003A	Flange M3 Nut Lock (GM)
SW-103004	M2.5mm Nut Lock
SW-104004	M3x3mm Set Screw
SW-104005	M3x4mm Set Screw
SW-104009	M3x16mm Set Screw
SW-104010	M5x4mm Set Screw (Flat Bottom)
SW-104011	M4x4mm Set Screw (Flat Bottom)
SW-105001	M3x8mm Cap Screw
SW-105005	M3x12mm Cap Screw
SW-105006A	M3x28mm Cap Screw full thread
SW-105013A	M3x25mm Cap Screw
SW-105018	M2x6mm Cap Head Screw (10PC)
SW-105020	M4x10mm Cap Screw (8PC)
SW-106001	M3x8mm Hex Soket OH/TP Screw
SW-106002	M3x10mm Hex Soket OH/TP Screw
SW-106003	M3x16mm Hex Soket OH/TP Screw
SW-106006	M3x20mm Hex Soket OH/TP Screw
SW-106007	M3x12mm Hex Soket OH/TP Screw(HT)
SW-106008	M3x12mm Hex Soket OH/TP Screw
SW-106009	M3x25mm Hex Soket OH/TP Screw
SW-106013	M2.5x8mm 1.5mmHex Soket OH/ST Screw
SW-106015	M3x5mm Hex Soket OH/TP Screw
SW-106020	M2.5x5mm 1.5mmHex Soket OH/ST Screw
SW-106021A	S35 Series M4x10mm Hex Soket OH/TP Set Screw
SW-106024	M4x12mm Hex Soket OH/TP Screw (8PC)
SW-108001	M3x12mm FH/ST HEX Screw
SW-108003	M3x10mm FH/ST HEX Screw
SW-108006	M3x8mm FH/ST HEX Screw
SW-108007	M3x6mm FH/ST HEX Screw
SW-108008	M3x35mm FH/ST HEX Screw
SW-108010	M4x10mm FH/ST HEX Screw
SW-108012	M4x16mm FH/ST HEX Screw
SW-108019	M2.6x6mm FH/ST HEX Screw
SW-108029	M2.0x4.6mm FH/ST HEX Screw (1.5mm HexHead)

Option Part List

Item No.	Part Name
SW-2503260FO	S353 Series Colorful Plastic Inserts Set (FO)
SW-2503260FY	S353 Series Colorful Plastic Inserts Set (FY)
SW-2503260LB	S353 Series Colorful Plastic Inserts Set (SB)(2 SET)
SW-210079AH	S35-4 Plastic Center Big Bore HET Diff Case (Hard)
SW-210091H	S35-4 Plastic Front/Rear Big Bore HET Diff Case (Hard)
SW-228008WH	SWORKz 1/8 Off Road Formula 2.0 Race Wing (WH)
SW-228008FY	SWORKz 1/8 Off Road Formula 2.0 Race Wing (FY)
SW-300049	SWORKz S35-3/S350 Series Rear Stainless Chassis End Protection (2PC)
SW-330115	Steering Knuckle Pivot Ball Turnbuckle
SW-330116	14mm Knuckle Pivot Ball
SW-330134A	S350 Series Aluminum Shock Ball Stud (4pc)
SW-330136A	S350 Series Aluminum Sway Bar Ball Stud (4pc)
SW-330168A	S35-3 Series Rear Chassis Blance wight 15g (2pc)
SW-330398A	SWORKz S350 Series Pro Wheel Nut (GM)
SW-330420	S350 Series Knuckle Pivot Ball Balance Nut (5.5g)(2pc)
SW-330424	S350 Series Aluminum Wing Holder (RED)
SW-330424B	S350 Series Aluminum Wing Holder (BK)
SW-330424G	S350 Series Aluminum Wing Holder (GM)
SW-330564A	S35 Series BBS System Shock Piston 1.5mmX6 Holes (BK)
SW-330565	S350 BBS System Shock Piston 1.3mmX8 Oblique Holes (2pc)
SW-330566	S350 BBS System Shock Piston 1.2mmX8 Oblique Holes (2pc)
SW-330698	S35E Series Aluminum Center Main Drive Shaft (L)
SW-330777B	S35-4 Series Aluminum Steering Linkage Ball Stud 7mm (L7)(4PC)
SW-330235	SWORKz 1/8 Motor Pinion Gear 13T
SW-330239	SWORKz 1/8 Motor Pinion Gear 14T
SW-330246	SWORKz 1/8 Motor Pinion Gear 16T
SW-330247	SWORKz 1/8 Motor Pinion Gear 17T
SW-330817	SWORKz 1/8 EP Motor Pinion Gear 18T
SW-330818	SWORKz 1/8 EP Motor Pinion Gear 19T
SW-330819	SWORKz 1/8 EPMotor Pinion Gear 20T
SW-338069	S35-4 E-Buggy Series Brass Material Center Chassis Brace (50g)
SW-338070A	S35 Series Rear Upper Arm Aluminum Ball Stud (2PC)
SW-338078-25	SWORKz Uni-Design 2-Way System Aluminum Steering Servo Horn 25T
SW-338078-23	SWORKz Uni-Design 2-Way System Aluminum Steering Servo Horn 23T
SW-340029-15	S35-T2/e Pro-composite Carbon Front Lower Arm Cover (1.5mm)(2PC)
SW-340030-15	S35-T2/e Pro-composite Carbon Rear Lower Arm Cover (1.5mm)(2PC)
SW-350002A	S35 Series BBS System Shock Piston 1.2mmX8 Straight Holes (BK)
SW-350003A	S35 Series BBS System Shock Piston 1.3mmX8 Straight Holes (BK)
SW-400022A-M	S35 Series BBS System Pro Shock Bladder (Medium)(8PC)
SW-400024S	S35 Series BBS System Hex-Cell Shock Bladder (Soft)(4PC)
SW-400024M	S35 Series BBS System Hex-Cell Shock Bladder(Medium)(4PC)
SWC-115107	S350 Competition Shock Spring A-2 (75X1.4X7.25)(Red)
SWC-115109	S350 Competition Shock Spring B-2 (90X1.4X8.5)(Pink)
SWC-115110	S350 Competition Shock Spring C-1 (75X1.5X7.75)(SkyBlue)
SWC-115118	S350 Competition Shock Spring E-3 (90X1.5X8.5)(Blue)
SWC-116006C	SWORKz Competition 8x16x5mm Ball Bearing (Metal Case)(6PC)
SWC-116019A	SWORKz Competition 5x13x4mm Ball Bearing (Metal Case)(4PC)
SWC-116019B	SWORKz Competition 5x13x4mm Ball Bearing (Metal Case/Japan)(4PC)
SW-338075	S35-4 Series T7 Aluminum Rear Wheel Hub (R=L)(2PC)
SW-338080	S35/S350 Series Lightened Wheel Hub for 8mm Axil (L5.5mm)
SWC-115163	S35 Series Black Competition Front Shock Spring (M4-Dot)(75X1.6X8.75)
SWC-115164	S35 Series Black Competition Front Shock Spring (M3-Dot)(75X1.6X9.0)
SWC-115165	S35 Series Black Competition Front Shock Spring (M2-Dot)(75X1.6X9.25)
SWC-115166	S35 Series Black Competition Rear Shock Spring (L4-Dot)(86X1.6X10.25)
SWC-115167	S35 Series Black Competition Rear Shock Spring (L3-Dot)(86X1.6X10.5)
SWC-115169	S35 Series Black Competition Front Shock Spring (S4-Dot)(70X1.6X8.25)
SWC-115171	S35 Series Black Competition Front Shock Spring (S2-Dot)(70X1.6X8.75)
SWC-115190	S35 Series Competition Black Line Rear Shock Spring (RM4-Dot)(80X1.6X9.75)
SWC-115191	S35 Series Competition Black Line Rear Shock Spring (RM3-Dot)(80X1.6X10.0)
SWC-115192	S35 Series Competition Black Line Rear Shock Spring (RM2-Dot)(80X1.6X10.25)
SW-118001-25	S35-T2/T2e Front Sway Bar 2.5mm
SW-118001-27	S35-T2/T2e Front Sway Bar 2.7mm
SW-118002-27	S35-T2/T2e Rear Sway Bar 2.7mm
SW-118002-30	S35-T2/T2e Rear Sway Bar 3.0mm

Shock Absorbers

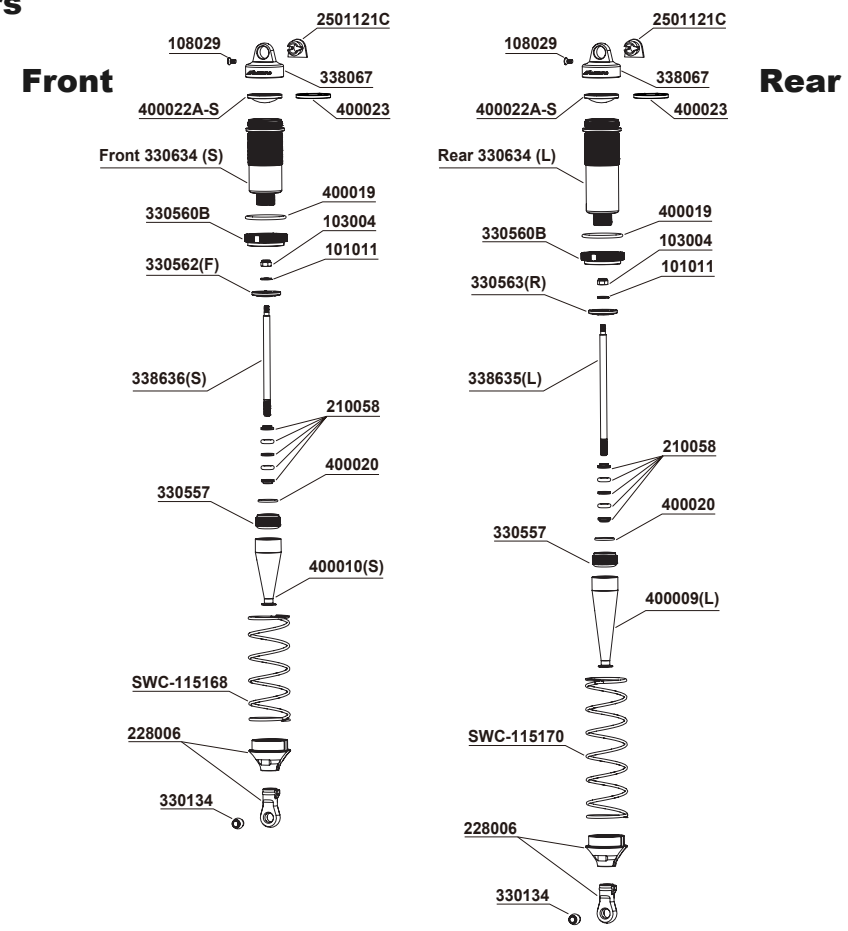

Differential

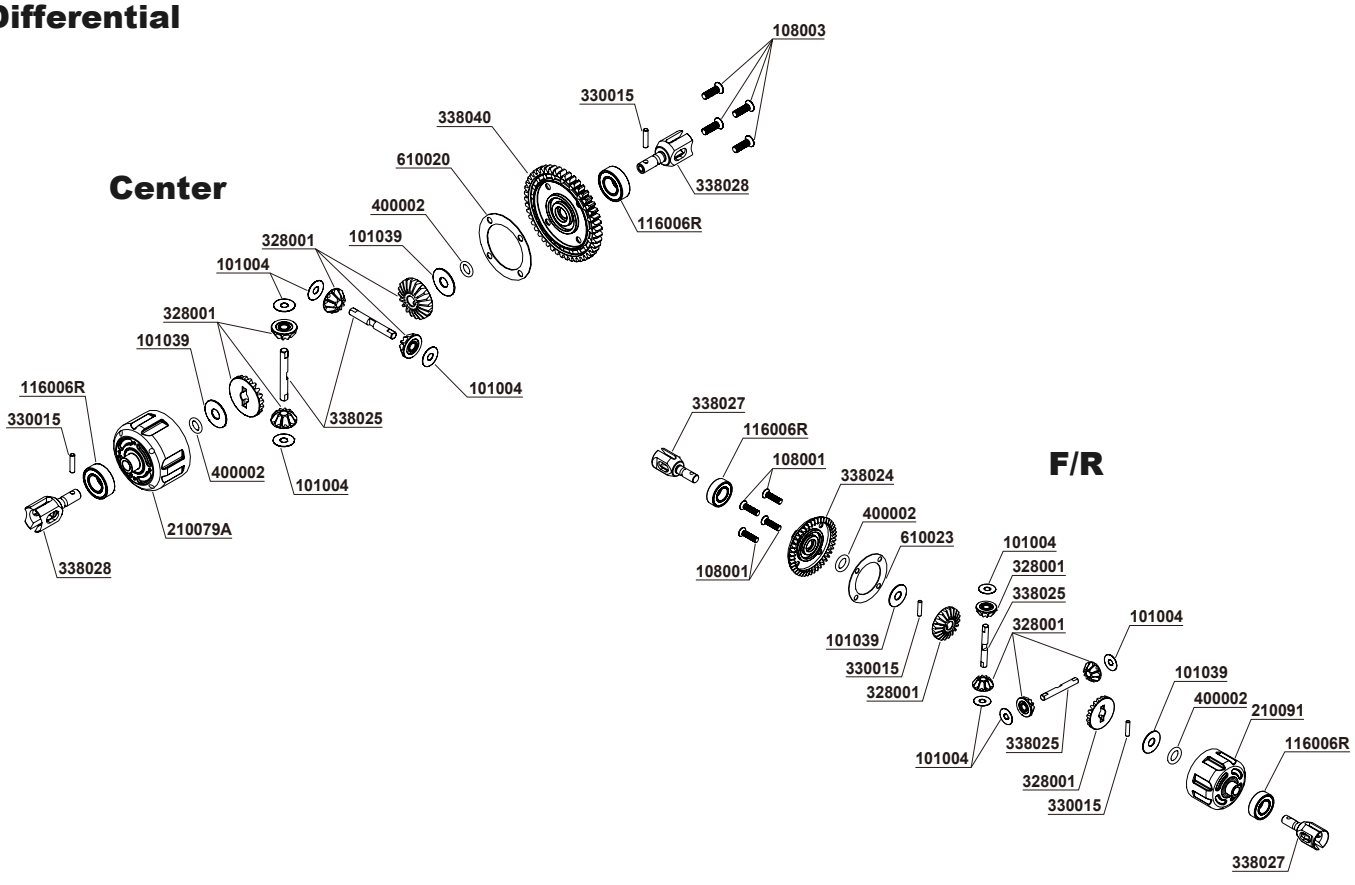

Front Suspension



Center Transmission

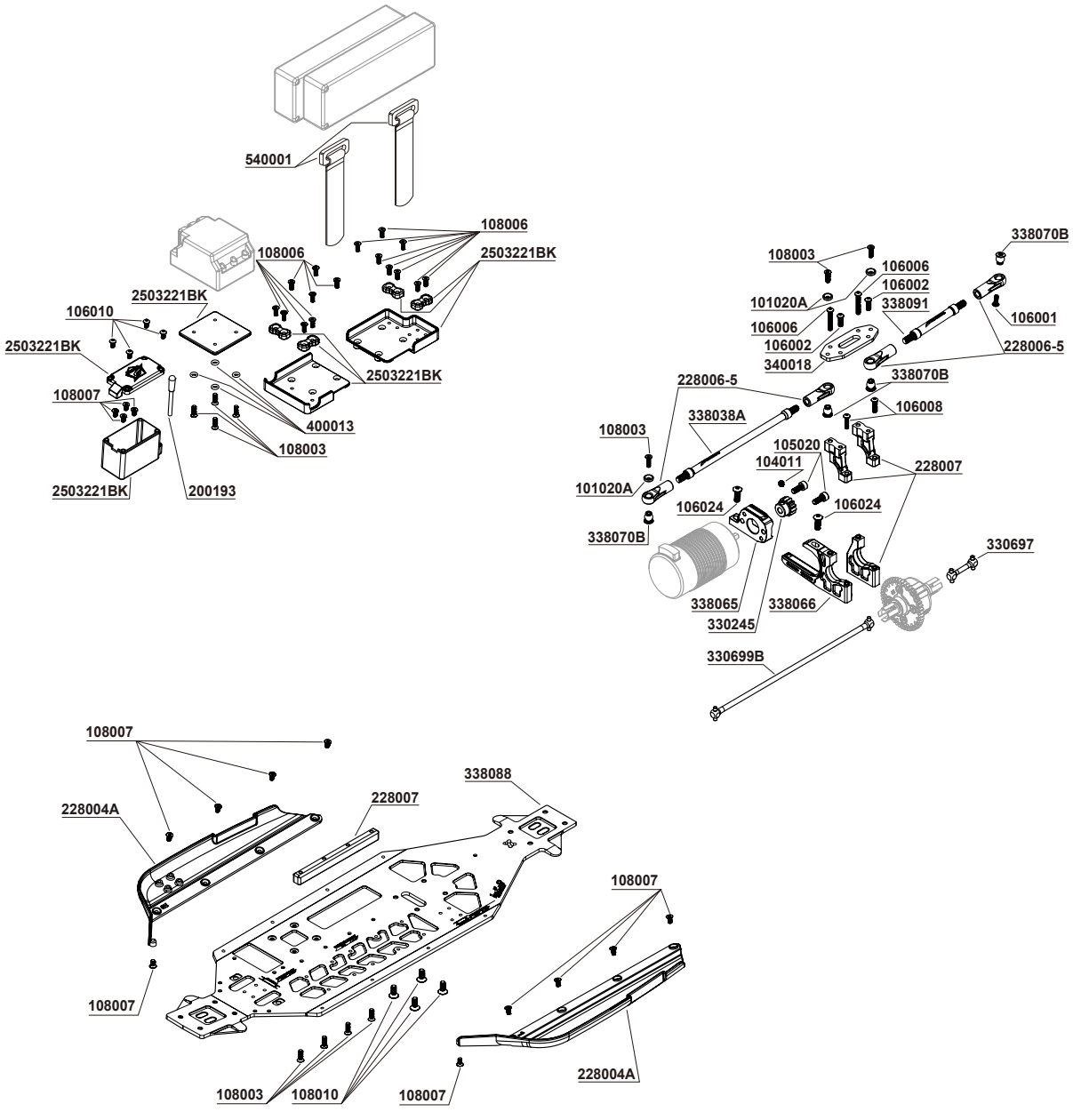

Rear Suspension

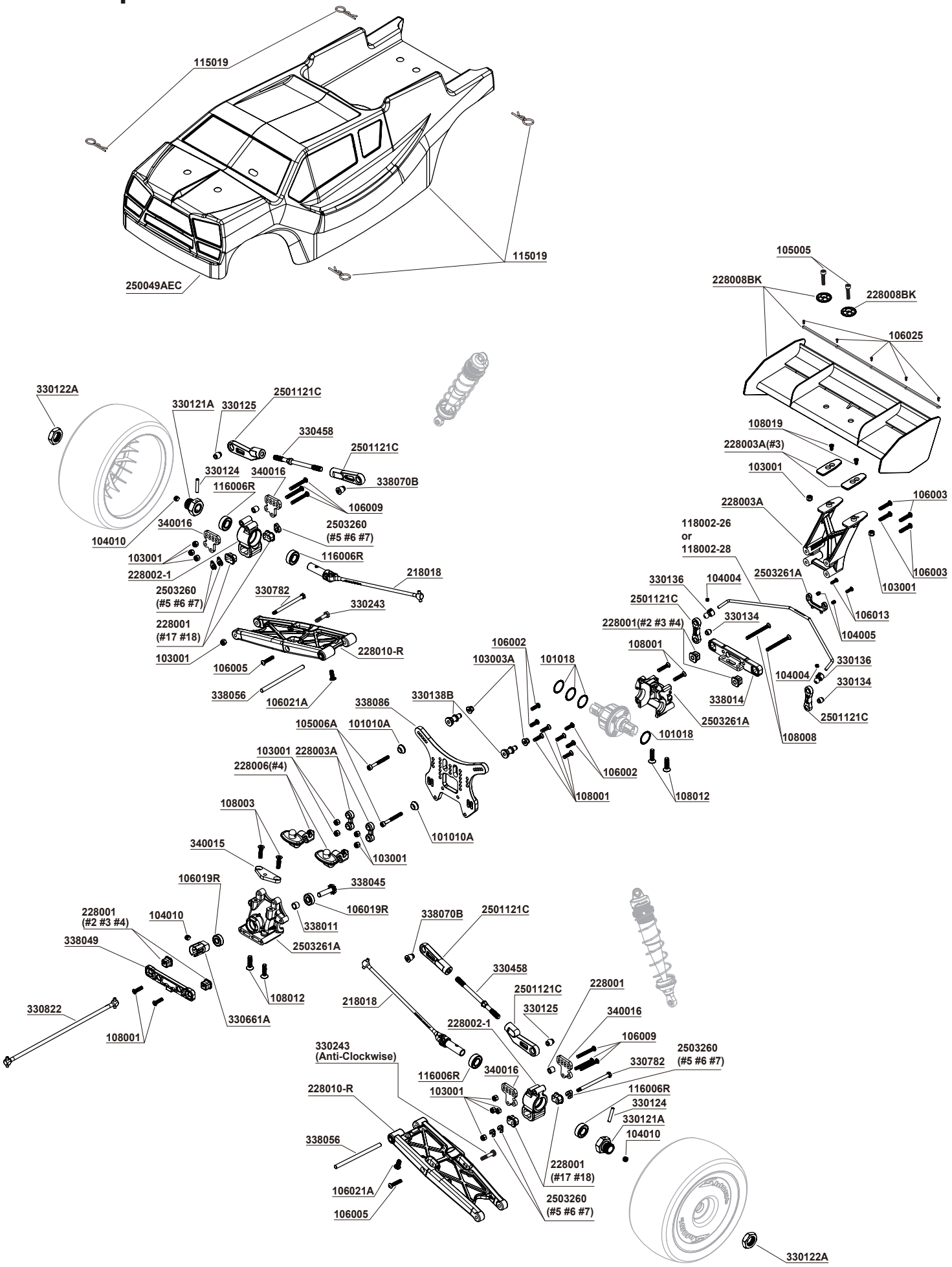

S35-T2e

1/8 OffRoad Brushless Power Pro Truggy



SPEEDMASTER HOBBY CO., LTD.

TEL: +886-3-538-7638

FAX: +886-3-538-7328

No.42, Ruiguang St., Xiangshan Dist.,

Hsinchu City 300, Taiwan (R.O.C.)

www.sworkz.com

508006-E

Production No. 40120206